SERVICE BULLETIN

MITSUBISHI MOTORS

GLOBAL AFTER SALES OFFICE, MITSUBISHI MOTORS CORPORATION

PURPOSE : CORRECTION	ISSUE NO. : MSB-16EXL35-501	DATE : 2016-02-04
SUBJECT : Error in writing of the troubleshooting regarding the wheel speed sensor of ABS & ASC(ASTC)		<DESTINATION/MODEL> (As per attached sheet 1) <M/Y> 12-15
GROUP : Gr:35(Service brake)		KA0T/KB0T/KH8W

1. Description :

Please refer to the attached document for the correction of the error in writing existing in the applicable service manual.

2. Affected service manuals :

Please refer to the attached document (Attached sheet 1)

3. About the details :

Please refer to the attached document (Attached sheets 2-11)

4. **Timing of implementation :**

From the initial vehicles.

Attached sheet 1 (1/3)

L200/SPORTERO/TRITON/STRADA/STRADA SPORTERO
<EU/RUSSIA>

Applicable manual	Pub. No.	Applicable title (INFO ID)	Content
2012 L200 Workshop Manual	CCRE12E1-CD (ENG) CCRF12E1-CD (FRE) CCRG12E1-CD (GER) CCRS12E1-CD (SPA) CCRI12E1-CD (ITA) N/A (RUSSIA)	CODE NO.C1200: WHEEL SPEED SENSOR (FR) (SIGNAL OPEN CIRCUIT), CODE NO.C1205: WHEEL SPEED SENSOR (FL) (SIGNAL OPEN CIRCUIT), CODE NO.C1210: WHEEL SPEED SENSOR (RR) (SIGNAL OPEN CIRCUIT), CODE NO.C1215: WHEEL SPEED SENSOR (RL) (SIGNAL OPEN CIRCUIT), (M352-01-900-59600-01)	Attached sheet 2
2013 L200 Workshop Manual	CKTE13E1-CD (ENG) CKTF13E1-CD (FRE) CKTG13E1-CD (GER) CKTS13E1-CD (SPA) CKTI13E1-CD (ITA) N/A (RUSSIA)	CODE NO.C1200: WHEEL SPEED SENSOR (FR) (SIGNAL OPEN CIRCUIT) (M353-00-720-09100-01)	Attached sheet 3
		CODE NO.C1200: WHEEL SPEED SENSOR (FL) (SIGNAL OPEN CIRCUIT) (M353-00-730-09800-01)	Attached sheet 4
		CODE NO.C1200: WHEEL SPEED SENSOR (RR) (SIGNAL OPEN CIRCUIT) (M353-00-740-09500-01)	Attached sheet 5
		CODE NO.C1200: WHEEL SPEED SENSOR (RL) (SIGNAL OPEN CIRCUIT) (M353-00-750-09200-01)	Attached sheet 6
2014 L200 Workshop Manual	CKTE14E1-CD (ENG) CKTF14E1-CD (FRE) CKTG14E1-CD (GER) CKTS14E1-CD (SPA) CKTI14E1-CD (ITA) N/A (RUSSIA)	CODE NO.C1200: WHEEL SPEED SENSOR (FR) (SIGNAL OPEN CIRCUIT), CODE NO.C1205: WHEEL SPEED SENSOR (FL) (SIGNAL OPEN CIRCUIT), CODE NO.C1210: WHEEL SPEED SENSOR (RR) (SIGNAL OPEN CIRCUIT), CODE NO.C1215: WHEEL SPEED SENSOR (RL) (SIGNAL OPEN CIRCUIT), (M352-01-900-59601-01)	Attached sheet 2
2015 L200 Workshop Manual	CKTE15E1-CD (ENG) CKTF15E1-CD (FRE) CKTG15E1-CD (GER) CKTS15E1-CD (SPA) CKTI15E1-CD (ITA) N/A (RUSSIA)	CODE NO.C1200: WHEEL SPEED SENSOR (FR) (SIGNAL OPEN CIRCUIT) (M353-00-720-09100-01)	Attached sheet 3
		CODE NO.C1200: WHEEL SPEED SENSOR (FL) (SIGNAL OPEN CIRCUIT) (M353-00-730-09800-01)	Attached sheet 4
		CODE NO.C1200: WHEEL SPEED SENSOR (RR) (SIGNAL OPEN CIRCUIT) (M353-00-740-09500-01)	Attached sheet 5
		CODE NO.C1200: WHEEL SPEED SENSOR (RL) (SIGNAL OPEN CIRCUIT) (M353-00-750-09200-01)	Attached sheet 6

<GENERAL EXPORT/GCC/BRAZIL/THAILAND>

Applicable manual	Pub. No.	Applicable title (INFO ID)	Content
2012 L200/SPORTERO/ TRITON/STRADA/ STRADA SPORTERO Workshop Manual 2013 L200/SPORTERO/ TRITON/STRADA/ STRADA SPORTERO Workshop Manual 2014 L200/SPORTERO/ TRITON/STRADA/ STRADA SPORTERO Workshop Manual	PWTE1105R(ENG) PWTS1106R(SPA) DRAFT(THAILAND) DRAFT(BRAZIL) PWTE1208R(ENG) PWTS1209R(SPA) DRAFT(THAILAND) BRAZIL(DRAFT) PWTE1308R(ENG) PWTS1309R(SPA) DRAFT(THAILAND) BRAZIL(DRAFT)	CODE NO.C1200: WHEEL SPEED SENSOR (FR) (SIGNAL OPEN CIRCUIT), CODE NO.C1205: WHEEL SPEED SENSOR (FL) (SIGNAL OPEN CIRCUIT), CODE NO.C1210: WHEEL SPEED SENSOR (RR) (SIGNAL OPEN CIRCUIT), CODE NO.C1215: WHEEL SPEED SENSOR (RL) (SIGNAL OPEN CIRCUIT), (M352-01-900-58500-01)	Attached sheet 2
		CODE NO.C1200: WHEEL SPEED SENSOR (FR) (SIGNAL OPEN CIRCUIT) (M353-00-720-08000-01)	Attached sheet 3
		CODE NO.C1200: WHEEL SPEED SENSOR (FL) (SIGNAL OPEN CIRCUIT) (M353-00-730-08700-01)	Attached sheet 4
		CODE NO.C1200: WHEEL SPEED SENSOR (RR) (SIGNAL OPEN CIRCUIT) (M353-00-740-08400-01)	Attached sheet 5
		CODE NO.C1200: WHEEL SPEED SENSOR (RL) (SIGNAL OPEN CIRCUIT) (M353-00-750-08100-01)	Attached sheet 6

<AUSTRALIA/NEW ZEALAND>

Applicable manual	Pub. No.	Applicable title (INFO ID)	Content
2012 TRITON Workshop Manual 2013 TRITON Workshop Manual 2014 TRITON Workshop Manual 2015 TRITON Workshop Manual	AU900212 NZ:DRAFT AU900302 NZ:DRAFT AU900406 NZ:DRAFT AU900413 NZ:DRAFT	CODE NO.C1200: WHEEL SPEED SENSOR (FR) (SIGNAL OPEN CIRCUIT), CODE NO.C1205: WHEEL SPEED SENSOR (FL) (SIGNAL OPEN CIRCUIT), CODE NO.C1210: WHEEL SPEED SENSOR (RR) (SIGNAL OPEN CIRCUIT), CODE NO.C1215: WHEEL SPEED SENSOR (RL) (SIGNAL OPEN CIRCUIT), (M352-01-900-58500-01)	Attached sheet 2
		CODE NO.C1200: WHEEL SPEED SENSOR (FR) (SIGNAL OPEN CIRCUIT) (M353-00-720-08000-01)	Attached sheet 3
		CODE NO.C1200: WHEEL SPEED SENSOR (FL) (SIGNAL OPEN CIRCUIT) (M353-00-730-08700-01)	Attached sheet 4
		CODE NO.C1200: WHEEL SPEED SENSOR (RR) (SIGNAL OPEN CIRCUIT) (M353-00-740-08400-01)	Attached sheet 5
		CODE NO.C1200: WHEEL SPEED SENSOR (RL) (SIGNAL OPEN CIRCUIT) (M353-00-750-08100-01)	Attached sheet 6

NATIVA/PAJERO SPORT/MONTERO SPORT/CHALLENGER
<GENERAL EXPORT/GCC/RUSSIA/BRAZIL/THAILAND>

Applicable manual	Pub. No.	Applicable title (INFO ID)	Content
2012 NATIVA/ PAJERO SPORT/ MONTERO SPORT Workshop Manual 2013 NATIVA/ PAJERO SPORT/ MONTERO SPORT Workshop Manual 2014 NATIVA/ PAJERO SPORT/ MONTERO SPORT Workshop Manual	PWJE1109R (ENG) PWJS1110R (SPA) DRAFT (THAILAND RUSSIA:N/A DRAFT(BRAZIL) PWJE1211R (ENG) PWJS1212R (SPA) DRAFT (THAILAND RUSSIA:N/A DRAFT(BRAZIL) PWJE1310R (ENG) PWJS1311R (SPA) DRAFT (THAILAND) DRAFT (THAILAND RUSSIA:N/A DRAFT(BRAZIL)	CODE NO.C1200: WHEEL SPEED SENSOR (FR) (SIGNAL OPEN CIRCUIT), CODE NO.C1205: WHEEL SPEED SENSOR (FL) (SIGNAL OPEN CIRCUIT), CODE NO.C1210: WHEEL SPEED SENSOR (RR) (SIGNAL OPEN CIRCUIT), CODE NO.C1215: WHEEL SPEED SENSOR (RL) (SIGNAL OPEN CIRCUIT), (M352-01-900-60400-01)	Attached sheet 7
		CODE NO.C1200: WHEEL SPEED SENSOR (FR) (SIGNAL OPEN CIRCUIT) (M353-00-720-10900-01)	Attached sheet 8
		CODE NO.C1200: WHEEL SPEED SENSOR (FL) (SIGNAL OPEN CIRCUIT) (M353-00-730-10600-01)	Attached sheet 9
		CODE NO.C1200: WHEEL SPEED SENSOR (RR) (SIGNAL OPEN CIRCUIT) (M353-00-740-10300-01)	Attached sheet 10
		CODE NO.C1200: WHEEL SPEED SENSOR (RL) (SIGNAL OPEN CIRCUIT) (M353-00-750-10000-01)	Attached sheet 11

<AUSTRALIA/NEW ZEALAND>

Applicable manual	Pub. No.	Applicable title (INFO ID)	Content
2012 CHALLENGER Workshop Manual 2013 CHALLENGER Workshop Manual 2014 CHALLENGER Workshop Manual 2015 CHALLENGER Workshop Manual	AU900213 NZ:DRAFT AU900301 NZ:DRAFT AU900407 NZ:DRAFT AU900412 NZ:DRAFT	CODE NO.C1200: WHEEL SPEED SENSOR (FR) (SIGNAL OPEN CIRCUIT), CODE NO.C1205: WHEEL SPEED SENSOR (FL) (SIGNAL OPEN CIRCUIT), CODE NO.C1210: WHEEL SPEED SENSOR (RR) (SIGNAL OPEN CIRCUIT), CODE NO.C1215: WHEEL SPEED SENSOR (RL) (SIGNAL OPEN CIRCUIT), (M352-01-900-60400-01)	Attached sheet 7
		CODE NO.C1200: WHEEL SPEED SENSOR (FR) (SIGNAL OPEN CIRCUIT) (M353-00-720-10900-01)	Attached sheet 8
		CODE NO.C1200: WHEEL SPEED SENSOR (FL) (SIGNAL OPEN CIRCUIT) (M353-00-730-10600-01)	Attached sheet 9
		CODE NO.C1200: WHEEL SPEED SENSOR (RR) (SIGNAL OPEN CIRCUIT) (M353-00-740-10300-01)	Attached sheet 10
		CODE NO.C1200: WHEEL SPEED SENSOR (RL) (SIGNAL OPEN CIRCUIT) (M353-00-750-10000-01)	Attached sheet 11

Attached sheet 2 (1/7)

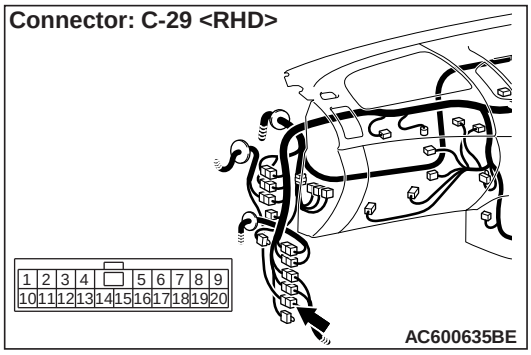

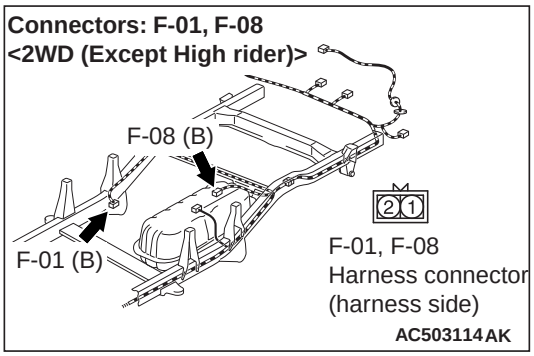

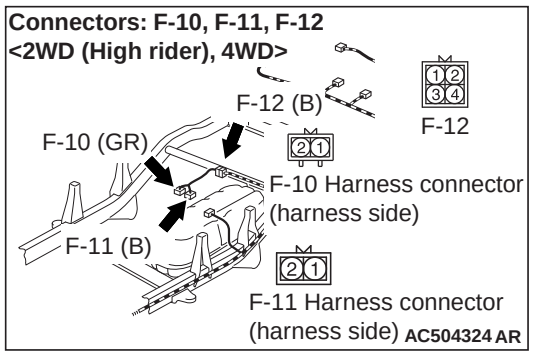

⚠ CAUTION

- **If there is any problem in the CAN bus lines, an incorrect diagnosis code may be set. Prior to this diagnosis, diagnose the CAN bus lines (Refer to GROUP 54C – CAN Bus Diagnostics Table .).**
- **Before replacing the ECU, ensure that the communication circuit is normal.**

OPERATION

- A toothed ABS rotor generates a voltage pulse as it moves across the pickup field of each wheel speed sensor.
- The wheel speed sensors transmit the frequency of the pulses to the ABS-ECU.
- The hydraulic unit assembly (integrated with ABS-ECU) modulates the amount of braking force individually applied to each wheel cylinder.

<Correct>

<Incorrect>

Attached sheet 2 (3/7) -(7/7)

DIAGNOSIS CODE SET CONDITION

Diagnosis codes No.C1200, C1205, C1210 or C1215 is set when signal is not input due to breakage of the wires of the four wheel speed sensors without the outputs of the codes No.C1202, C1207, C1212 or C1217.

PROBABLE CAUSES

Current trouble

- Damaged wiring harness and connectors
- Wheel speed sensor malfunction
- ABS-ECU malfunction

Past trouble

- Carry out diagnosis with particular emphasis on wiring harness and connector failures between ABS-ECU and the wheel speed sensor. For diagnosis procedures, refer to How to treat past trouble (GROUP 00 – How to Cope with Intermittent Malfunctions .).

DIAGNOSIS PROCEDURE

STEP 1. M.U.T.-III CAN bus diagnosis

Use M.U.T.-III to diagnose the CAN bus lines.

Q: Is the check result normal?

YES : Go to Step 3.

NO : Repair the CAN bus lines (Refer to GROUP 54C – CAN Bus Diagnostics Table .). On completion, go to Step 2.

STEP 2. Diagnosis code recheck after resetting CAN bus lines

(1) Erase the diagnosis code.

(2) Drive the vehicle at 15 km/h or more.

NOTE: The ABS warning lamp does not turn OFF in some cases unless the vehicle runs at 15 km/h or higher.

Q: Is diagnosis code No.C1200, C1205, C1210 or C1215 set?

YES : Go to Step 3.

NO : The procedure is complete.

STEP 3. M.U.T.-III diagnosis code

Check that diagnosis codes No.C1202, C1207, C1212 or C1217 are also set.

Q: Are diagnosis codes No.C1202, C1207, C1212 or C1217 also set?

YES : Perform the diagnosis for diagnosis codes No.C1202, C1207, C1212 or C1217 (Refer to P.35B-26.).

NO : Go to Step 4.

STEP 4. M.U.T.-III data list

Check the following data list (Refer to P.35B-54.).

- Item No.01: FL wheel speed sensor
- Item No.02: FR wheel speed sensor
- Item No.03: RL wheel speed sensor
- Item No.04: RR wheel speed sensor

Q: Is the check result normal?

YES : Go to Step 8.
NO : Go to Step 5.

STEP 5. Connector check: A-01 ABS-ECU connector, A-125 front wheel speed sensor (RH) connector, A-119 front wheel speed sensor (LH) connector, F-01 rear wheel speed sensor (RH) connector <2WD (Except High rider)> or F-10 rear wheel speed sensor (RH) connector <2WD (High rider), 4WD>, F-08 rear wheel speed sensor (LH) connector <2WD (Except High rider)> or F-11 rear wheel speed sensor (LH) connector <2WD (High rider), 4WD>, C-29 intermediate connector and F-12 intermediate connector <2WD (High rider), 4WD>

Q: Is the check result normal?

YES : Go to Step 6.
NO : Repair the defective connector. Then go to Step 9.

STEP 6. Resistance measurement at the A-01 ABS-ECU connector

(1) Disconnect the A-01 ABS-ECU connector.
(2) Measure the resistance between the A-01 ABS-ECU connector terminals.

Code No.C1200 is set
- Between terminal No.6 and No.7

Code No.C1205 is set
- Between terminal No.18 and No.19

Code No.C1210 is set
- Between terminal No.20 and No.21

Code No.C1215 is set
- Between terminal No.8 and No.9

OK: Continuity

Q: Is the check result normal?

YES : Go to Step 7.
NO : Repair the wiring harness. Then go to Step 9.

STEP 7. Check for wheel speed sensor as a single unit

Refer to P.35B-63.

Q: Is the check result normal?

YES : Go to Step 8.
NO : Replace the wheel speed sensor (Refer to P.35B-62.). Then go to Step 9.

STEP 8. Check whether the diagnosis code is reset.

(1) Erase the diagnosis code.
(2) Drive the vehicle at 15 km/h or more.

NOTE: The ABS warning lamp does not turn OFF in some cases unless the vehicle runs at 15 km/h or higher.

Q: Are diagnosis codes No.C1200, C1205, C1210 or C1215 set?

YES : Replace the hydraulic unit (integrated with ABS-ECU) (Refer to P.35B-60.). Then go to Step 9.
NO : Intermittent malfunction (Refer to GROUP 00 – How to Cope with Intermittent Malfunctions .).

STEP 9. Check whether the diagnosis code is reset.

(1) Erase the diagnosis code.
(2) Drive the vehicle at 15 km/h or more.

NOTE: The ABS warning lamp does not turn OFF in some cases unless the vehicle runs at 15 km/h or higher.

Q: Are diagnosis codes No.C1200, C1205, C1210 or C1215 set?

YES : Return to Step 1.
NO : This diagnosis is complete.

<Incorrect>
<Correct>

Attached sheet 2 (3/7) -(7/7)

DIAGNOSIS PROCEDURE

STEP 1. M.U.T.-III CAN bus diagnosis

Use M.U.T.-III to diagnose the CAN bus lines.

Q: Is the check result normal?

YES : Go to Step 3.

NO : Repair the CAN bus lines (Refer to GROUP 54C – CAN Bus Diagnostics Table). On completion, go to Step 2.

STEP 2. Diagnosis code recheck after resetting CAN bus lines

(1) Drive the vehicle at 20 km/h or more.

NOTE: The ABS warning lamp does not turn OFF in some cases unless the vehicle runs at 20 km/h or higher.

(2) Turn the ignition switch from the ON position to the LOCK (OFF) position.

Q: Are the diagnosis codes No.C1200, C1205, C1210 or C1215 set?

YES : Go to Step 3.

NO : The procedure is complete.

STEP 3. M.U.T.-III diagnosis code

Check that the diagnosis codes No.C1202, C1207, C1212 or C1217 are also set.

Q: Are the diagnosis codes No.C1202, C1207, C1212 or C1217 also set?

YES : Perform the diagnosis for the diagnosis codes No.C1202, C1207, C1212 or C1217 (Refer to).
NO : Go to Step 4.

STEP 4. M.U.T.-III data list
Check the following data list (Refer to .).
- Item No.01: FL wheel speed sensor
- Item No.02: FR wheel speed sensor
- Item No.03: RL wheel speed sensor
- Item No.04: RR wheel speed sensor

Q: Is the check result normal?
YES : Go to Step 18.
NO : Go to Step 5.

STEP 5. Connector check: A-01 ABS-ECU connector, A-125 front wheel speed sensor (RH) connector <Code No.C1200>, A-119 front wheel speed sensor (LH) connector <Code No.C1205>, F-01 rear wheel speed sensor (RH) connector <Code No.C1210 and 2WD (Except High rider)> or F-10 rear wheel speed sensor (RH) connector <Code No.C1210 and 2WD (High rider), 4WD>, F-08 rear wheel speed sensor (LH) connector <Code No.C1215 and 2WD (Except High rider)> or F-11 rear wheel speed sensor (LH) connector <Code No.C1215 and 2WD (High rider), 4WD>, C-29 intermediate connector <Code No.C1210 or No.C1215> and F-12 intermediate connector <Code No.C1210 and 2WD (High rider), 4WD or code No.C1215 and 2WD (High rider), 4WD>

Q: Is the check result normal?
YES : Go to Step 6.
NO : Repair the defective connector. Then go to Step 19.

STEP 6. Voltage measurement at the A-01 ABS-ECU connector
(1) Disconnect the A-01 ABS-ECU connector.
(2) Turn the ignition switch to the ON position.
(3) Measure the voltage between the A-01 ABS-ECU connector terminals.

Code No.C1200 is set
- Between terminal No.6 and body earth or between terminal No.7 and body earth

Code No.C1205 is set
- Between terminal No.18 and body earth or between terminal No.19 and body earth

Code No.C1210 is set
- Between terminal No.20 and body earth or between terminal No.21 and body earth

Code No.C1215 is set
- Between terminal No.8 and body earth or between terminal No.9 and body earth

OK: 1 V or less

Q: Is the check result normal?
YES : Go to Step 7.
NO (Code No.C1200 NG) : Go to Step 8.
NO (Code No.C1205 NG) : Go to Step 9.
NO (Code No.C1210 NG) : Go to Step 10.
NO (Code No.C1215 NG) : Go to Step 11.

STEP 7. Resistance measurement at the A-01 ABS-ECU connector
(1) Disconnect the A-01 ABS-ECU connector.
(2) Measure the resistance between the A-01 ABS-ECU connector terminals.

Code No.C1200 is set
- Between terminal No.6 and body earth or between terminal No.7 and body earth

Code No.C1205 is set
- Between terminal No.18 and body earth or between terminal No.19 and body earth

Code No.C1210 is set
- Between terminal No.20 and body earth or between terminal No.21 and body earth

Code No.C1215 is set
- Between terminal No.8 and body earth or between terminal No.9 and body earth

OK: 1 V or less

Q: Is the check result normal?
YES : Go to Step 12.
NO (Code No.C1200 NG) : Go to Step 8.
NO (Code No.C1205 NG) : Go to Step 9.
NO (Code No.C1210 NG) : Go to Step 10.
NO (Code No.C1215 NG) : Go to Step 11.

STEP 8. Wiring harness check between A-01 ABS-ECU connector terminal No.6 and A-125 front wheel speed sensor (RH) connector terminal No.1 and between A-01 ABS-ECU connector terminal No.7 and A-125 front wheel speed sensor (RH) connector terminal No.2

- Check for short circuit in front wheel speed sensor (RH) circuit for short to power supply or earth.

Q: Is the check result normal?

YES : Replace the front wheel speed sensor (RH) (Refer to). Then go to Step 19.

NO : Repair the wiring harness. Then go to Step 19.

STEP 9. Wiring harness check between A-01 ABS-ECU connector terminal No.18 and A-119 front wheel speed sensor (LH) connector terminal No.1 and between A-01 ABS-ECU connector terminal No.19 and A-119 front wheel speed sensor (LH) connector terminal No.2

- Check for short circuit in front wheel speed sensor (LH) circuit for short to power supply or earth.

Q: Is the check result normal?

YES : Replace the front wheel speed sensor (LH) (Refer to). Then go to Step 19.

NO : Repair the wiring harness. Then go to Step 19.

STEP 10. Wiring harness check between A-01 ABS-ECU connector terminal No.20 and F-01 rear wheel speed sensor (RH) connector <2WD (Except High rider)> or F-10 rear wheel speed sensor (RH) connector <2WD (High rider), 4WD> terminal No.1 and between A-01 ABS-ECU connector terminal No.21 and F-01 rear wheel speed sensor (RH) connector <2WD (Except High rider)> or F-10 rear wheel speed sensor (RH) connector <2WD (High rider), 4WD> terminal No.2

- Check for short circuit in rear wheel speed sensor (RH) circuit for short to power supply or earth.

Q: Is the check result normal?

YES : Replace the rear wheel speed sensor (RH) (Refer to). Then go to Step 19.

NO : Repair the wiring harness. Then go to Step 19.

STEP 11. Wiring harness check between A-01 ABS-ECU connector terminal No.8 and F-08 rear wheel speed sensor (LH) connector <2WD (Except High rider)> or F-11 rear wheel speed sensor (LH) connector <2WD (High rider), 4WD> terminal No.1 and between A-01 ABS-ECU connector terminal No.21 and F-08 rear wheel speed sensor (LH) connector <2WD (Except High rider)> or F-11 rear wheel speed sensor (LH) connector <2WD (High rider), 4WD> terminal No.2

- Check for short circuit in rear wheel speed sensor (LH) circuit for short to power supply or earth.

Q: Is the check result normal?

YES : Replace the rear wheel speed sensor (LH) (Refer to). Then go to Step 19.

NO : Repair the wiring harness. Then go to Step 19.

STEP 12. Voltage or current measurement at A-125 front wheel speed sensor (RH) connector <Code No.C1200>, A-119 front wheel speed sensor (LH) connector <Code No.C1205>, F-01 rear wheel speed sensor (RH) connector <Code No.C1210 and 2WD (Except High rider)>, F-10 rear wheel speed sensor (RH) connector <Code No.C1210 and 2WD (High rider), 4WD>, F-08 rear wheel speed sensor (LH) connector <Code No.C1215 and 2WD (Except High rider)> or F-11 rear wheel speed sensor (LH) connector <Code No.C1215 and 2WD (High rider), 4WD> (Open circuit)

(1) Disconnect the each wheel speed sensors connector, and measure at the wiring harness side.
(2) Turn the ignition switch to the ON position.
(3) Measure the voltage between the power supply terminal of each wheel speed sensor connector terminal No. 1 and the body earth.
(4) Measure the output current at the special tool test harness (MB991709) to connect between each wheel speed sensor connector and the wiring harness connector (Refer to).

OK:
<Voltage> System voltage
<Current> 5 – 9 mA or 11 – 17 mA

Q: Is the check result normal?

YES : Go to Step 17.
NO (Code No.C1200 NG) : Go to Step 13.
NO (Code No.C1205 NG) : Go to Step 14.
NO (Code No.C1210 NG) : Go to Step 15.
NO (Code No.C1215 NG) : Go to Step 16.

STEP 13. Wiring harness check between A-01 ABS-ECU connector terminal No.6 and A-125 front wheel speed sensor (RH) connector terminal No.1 and between A-01 ABS-ECU connector terminal No.7 and A-125 front wheel speed sensor (RH) connector terminal No.2

- Check for open circuit in front wheel speed sensor (RH).

Q: Is the check result normal?
YES : Go to Step 17.
NO : Repair the wiring harness. Then go to Step 19.

STEP 14. Wiring harness check between A-01 ABS-ECU connector terminal No.18 and A-119 front wheel speed sensor (LH) connector terminal No.1 and between A-01 ABS-ECU connector terminal No.19 and A-119 front wheel speed sensor (LH) connector terminal No.2

- Check for open circuit in front wheel speed sensor (LH).

Q: Is the check result normal?
YES : Go to Step 17.
NO : Repair the wiring harness. Then go to Step 19.

STEP 15. Wiring harness check between A-01 ABS-ECU connector terminal No.20 and F-01 rear wheel speed sensor (RH) connector <2WD (Except High rider)> or F-10 rear wheel speed sensor (RH) connector <2WD (High rider), 4WD> terminal No.1 and between A-01 ABS-ECU connector terminal No.21 and F-01 rear wheel speed sensor (RH) connector <2WD (Except High rider)> or F-10 rear wheel speed sensor (RH) connector <2WD (High rider), 4WD> terminal No.2

- Check for open circuit in rear wheel speed sensor (RH).

Q: Is the check result normal?
YES : Go to Step 17.
NO : Repair the wiring harness. Then go to Step 19.

STEP 16. Wiring harness check between A-01 ABS-ECU connector terminal No.8 and F-08 rear wheel speed sensor (LH) connector <2WD (Except High rider)> or F-11 rear wheel speed sensor (LH) connector <2WD (High rider), 4WD> terminal No.1 and between A-01 ABS-ECU connector terminal No.21 and F-08 rear wheel speed sensor (LH) connector <2WD (Except High rider)> or F-11 rear wheel speed sensor (LH) connector <2WD (High rider), 4WD> terminal No.2

- Check for open circuit in rear wheel speed sensor (LH).

Q: Is the check result normal?
YES : Go to Step 17.
NO : Repair the wiring harness. Then go to Step 19.

STEP 17. Check for wheel speed sensor as a single unit
Refer to .

Q: Is the check result normal?
YES : Go to Step 18.
NO : Replace the wheel speed sensor (Refer to). Then go to Step 19.

STEP 18. Check whether the diagnosis code is reset.
(1) Erase the diagnosis code.
(2) Drive the vehicle at 20 km/h or more.

NOTE: The ABS warning lamp does not turn OFF in some cases unless the vehicle runs at 20 km/h or higher.

Q: Are the diagnosis codes No.C1200, C1205, C1210 or C1215 set?
YES : Replace the hydraulic unit (integrated with ABS-ECU) (Refer to). Then go to Step 19.
NO : Intermittent malfunction (Refer to GROUP 00 – How to Cope with Intermittent Malfunctions).

STEP 19. Check whether the diagnosis code is reset.
(1) Erase the diagnosis code.
(2) Drive the vehicle at 20 km/h or more.

NOTE: The ABS warning lamp does not turn OFF in some cases unless the vehicle runs at 20 km/h or higher.

Q: Are the diagnosis codes No.C1200, C1205, C1210 or C1215 set?

YES : Return to Step 1.
NO : This diagnosis is complete.

⚠ CAUTION
- **If there is any problem in the CAN bus lines, an incorrect diagnosis code may be set. Prior to this diagnosis, diagnose the CAN bus lines (Refer to GROUP 54C – CAN Bus Diagnostics Table .).**
- **Before replacing the ECU, ensure that the communication circuit is normal.**

OPERATION
- A toothed ABS rotor generates a voltage pulse as it moves across the pickup field of each wheel speed sensor.
- The wheel speed sensor transmit the frequency of the pulses to the ASTC-ECU.
- The hydraulic unit assembly (integrated with ASTC-ECU) modulates the amount of braking force individually applied to each wheel cylinder.

DIAGNOSIS CODE SET CONDITION
Diagnosis code No.C1200 is set when signal is not input due to breakage of the wire of the wheel speed sensor without the output of the code No.C1202.

PROBABLE CAUSES

Current trouble
- Damaged wiring harness and connectors
- Wheel speed sensor malfunction
- ASTC-ECU malfunction

Past trouble
- Carry out diagnosis with particular emphasis on wiring harness and connector failures between ASTC-ECU and the wheel speed sensor. For diagnosis procedures, refer to How to treat past trouble (GROUP 00 – How to Cope with Intermittent Malfunctions .).

DIAGNOSIS PROCEDURE

STEP 1. M.U.T.-III CAN bus diagnosis
Use M.U.T.-III to diagnose the CAN bus lines.

Q: Is the check result normal?
YES : Go to Step 3.
NO : Repair the CAN bus lines (Refer to GROUP 54C – CAN Bus Diagnostics Table .). On completion, go to Step 2.

STEP 2. Diagnosis code recheck after resetting CAN bus lines
(1) Erase the diagnosis code.
(2) Drive the vehicle at 15 km/h or more.

NOTE: The ABS warning lamp does not turn OFF in some cases unless the vehicle runs at 15 km/h or higher.

Q: Is the diagnosis code No.C1200 set?
YES : Go to Step 3.
NO : The procedure is complete.

STEP 3. M.U.T.-III diagnosis code
Check that the diagnosis code No.C1202 are also set.

Q: Is the diagnosis code No.C1202 also set?
YES : Perform the diagnosis for the diagnosis code No.C1202 (Refer to P.35C-47.).
NO : Go to Step 4.

STEP 4. M.U.T.-III data list
Check the following data list (Refer to P.35C-131.).
- Item No.02: FR wheel speed sensor

Q: Is the check result normal?
YES : Go to Step 8.
NO : Go to Step 5.

STEP 5. Connector check: A-48 ASTC-ECU connector, A-125 front wheel speed sensor (RH) connector

Q: Is the check result normal?
YES : Go to Step 6.
NO : Repair the defective connector. Then go to Step 9.

STEP 6. Resistance measurement at the A-48 ASTC-ECU connector
(1) Disconnect the A-48 ASTC-ECU connector.
(2) Measure the resistance between the A-48 ASTC-ECU connector terminal No.6 and terminal No.7.

OK: Continuity

Q: Is the check result normal?
YES : Go to Step 7.
NO : Repair the wiring harness. Then go to Step 9.

STEP 7. Check for wheel speed sensor as a single unit
Refer to P.35C-141.

Q: Is the check result normal?
YES : Go to Step 8.
NO : Replace the wheel speed sensor (Refer to P.35C-141.). Then go to Step 9.

<Incorrect> <Correct>
Attached sheet 3 (3/4) -(4/4)

Attached sheet 3 (2/4)

STEP 8. Check whether the diagnosis code is reset.
(1) Erase the diagnosis code.
(2) Drive the vehicle at 15 km/h or more.

NOTE: The ABS warning lamp does not turn OFF in some cases unless the vehicle runs at 15 km/h or higher.

Q: Is the diagnosis code No.C1200 set?
YES : Replace the hydraulic unit (integrated with ASTC-ECU) (Refer to P.35C-140.). Then go to Step 9.
NO : Intermittent malfunction (Refer to GROUP 00 – How to Cope with Intermittent Malfunctions .).

STEP 9. Check whether the diagnosis code is reset.
(1) Erase the diagnosis code.
(2) Drive the vehicle at 15 km/h or more.

NOTE: The ABS warning lamp does not turn OFF in some cases unless the vehicle runs at 15 km/h or higher.

Q: Is the diagnosis code No.C1200 set?
YES : Return to Step 1.
NO : This diagnosis is complete.

<Incorrect>

Code No.C1205: Wheel speed sensor (FL) (signal open circuit)

Attached sheet 3 (3/4) -(4/4)

<Correct>

Wheel Speed Sensor Circuit

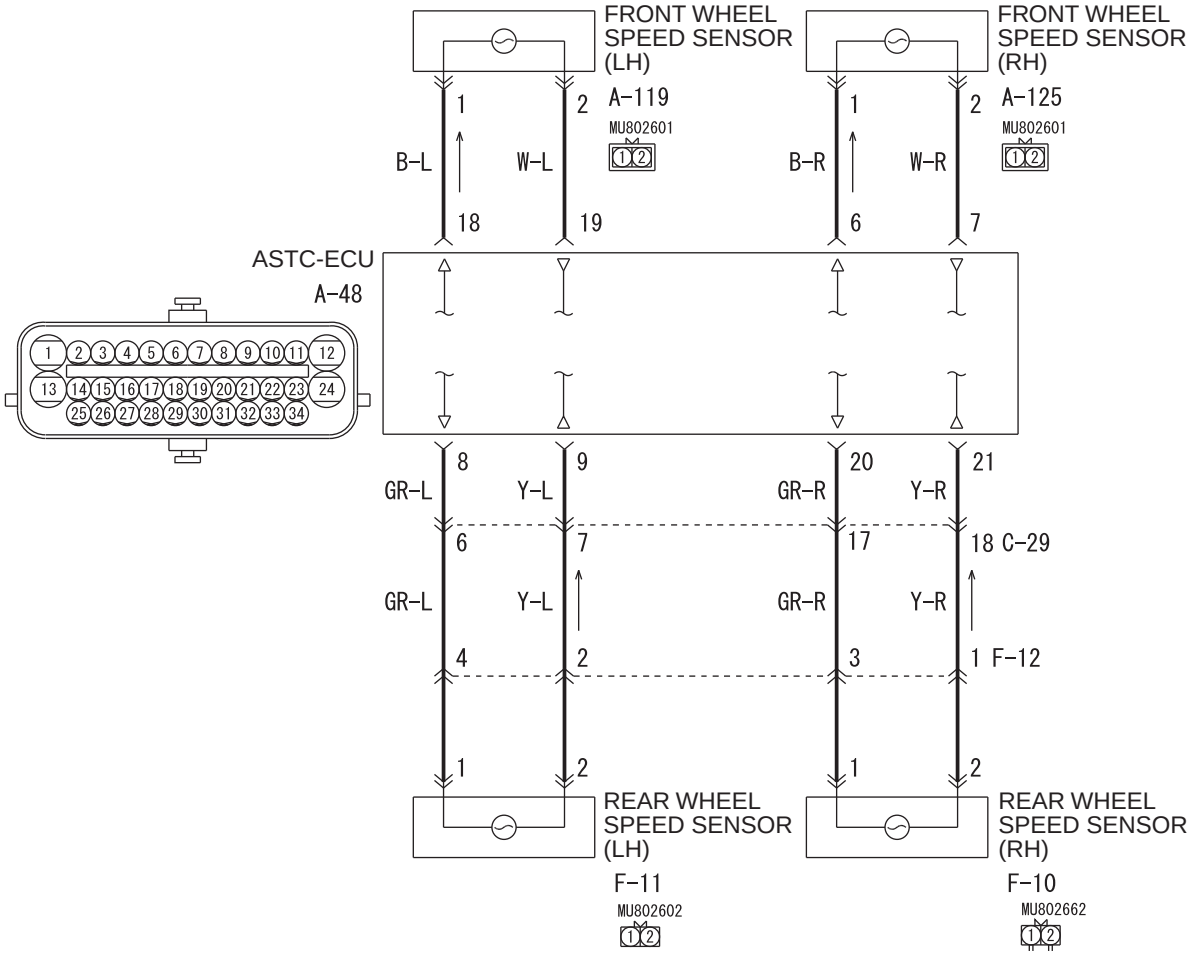

Wire colour code
B : Black LG : Light green G : Green L : Blue W : White Y : Yellow SB : Sky blue
BR : Brown O : Orange GR : Grey R : Red P : Pink V : Violet PU : Purple

ACB00772

DIAGNOSIS PROCEDURE

STEP 1. M.U.T.-III CAN bus diagnosis
Use M.U.T.-III to diagnose the CAN bus lines.

Q: Is the check result normal?
YES : Go to Step 3.
NO : Repair the CAN bus lines (Refer to GROUP 54C – CAN Bus Diagnostics Table). On completion, go to Step 2.

STEP 2. Diagnosis code recheck after resetting CAN bus lines
(1) Drive the vehicle at 20 km/h or more.
NOTE: The ABS warning lamp does not turn OFF in some cases unless the vehicle runs at 20 km/h or higher.
(2) Turn the ignition switch from the ON position to the LOCK (OFF) position.

Q: Is the diagnosis code No.C1200 set?
YES : Go to Step 3.
NO : The procedure is complete.

STEP 3. M.U.T.-III diagnosis code
Check that the diagnosis code No.C1202 are also set.

Q: Is the diagnosis code No.C1202 also set?
YES : Perform the diagnosis for the diagnosis code No.C1202 (Refer to).
NO : Go to Step 4.

STEP 4. M.U.T.-III data list
Check the following data list (Refer to .).
- Item No.02: FR wheel speed sensor

Q: Is the check result normal?
YES : Go to Step 12.
NO : Go to Step 5.

STEP 5. Connector check: A-48 ASTC-ECU connector, A-125 front wheel speed sensor (RH) connector

Q: Is the check result normal?
YES : Go to Step 6.
NO : Repair the defective connector. Then go to Step 13.

STEP 6. Voltage measurement at the A-48 ASTC-ECU connector (Short circuit to power supply)
(1) Disconnect the A-48 ASTC-ECU connector.
(2) Turn the ignition switch to the ON position.
(3) Measure the voltage between the A-48 ASTC-ECU connector terminal No.6 and body earth or between the A-48 ASTC-ECU connector terminal No.7 and body earth.

OK: 1 V or less

Q: Is the check result normal?
YES : Go to Step 7.
NO : Go to Step 8.

STEP 7. Resistance measurement at the A-48 ASTC-ECU connector (Short circuit to earth)
(1) Disconnect the A-48 ASTC-ECU connector.
(2) Measure the resistance between the A-48 ASTC-ECU connector terminal No.6 and body earth and

between the A-48 ASTC-ECU connector terminal No.7 and body earth.

OK: Continuity

Q: Is the check result normal?
YES : Go to Step 9.
NO : Go to Step 8.

STEP 8. Wiring harness check between A-48 ASTC-ECU connector terminal No.6 and A-125 front wheel speed sensor (RH) connector terminal No.1 and between A-48 ASTC-ECU connector terminal No.7 and A-125 front wheel speed sensor (RH) connector terminal No.2

- Check for short circuit in front wheel speed sensor (RH) circuit for short to power supply or earth.

Q: Is the check result normal?
YES : Replace the front wheel speed sensor (RH) (Refer to). Then go to Step 13.
NO : Repair the wiring harness. Then go to Step 13.

STEP 9. Voltage or current measurement at A-125 front wheel speed sensor (RH) connector (Open circuit)

(1) Disconnect the A-125 front wheel speed sensor (RH) connector, and measure at the wiring harness side.
(2) Turn the ignition switch to the ON position.
(3) Measure the voltage between the power supply terminal of A-125 front wheel speed sensor (RH) connector terminal No.1 and the body earth.
(4) Measure the output current at the special tool test harness (MB991709) to connect between the A-125 front wheel speed sensor (RH) connector and the wiring harness connector (Refer to).

OK:
<Voltage> System voltage
<Current> 5 – 9 mA or 11 – 17 mA

Q: Is the check result normal?
YES : Go to Step 11.
NO : Go to Step 10.

STEP 10. Wiring harness check between A-48 ASTC-ECU connector terminal No.6 and A-125 front wheel speed sensor (RH) connector terminal No.1 and between A-48 ASTC-ECU connector terminal No.7 and A-125 front wheel speed sensor (RH) connector terminal No.2

- Check for open circuit in front wheel speed sensor (RH).

Q: Is the check result normal?
YES : Go to Step 11.
NO : Repair the wiring harness. Then go to Step 13.

STEP 11. Check for wheel speed sensor as a single unit

Refer to .

Q: Is the check result normal?
YES : Go to Step 12.
NO : Replace the front wheel speed sensor (RH) (Refer to). Then go to Step 13.

STEP 12. Check whether the diagnosis code is reset.

(1) Erase the diagnosis code.
(2) Drive the vehicle at 20 km/h or more.

NOTE: The ABS warning lamp does not turn OFF in some cases unless the vehicle runs at 20 km/h or higher.

Q: Is the diagnosis code No.C1200 set?
YES : Replace the hydraulic unit (integrated with ASTC-ECU) (Refer to). Then go to Step 13.
NO : Intermittent malfunction (Refer to GROUP 00 – How to Cope with Intermittent Malfunctions).

STEP 13. Check whether the diagnosis code is reset.

(1) Erase the diagnosis code.
(2) Drive the vehicle at 20 km/h or more.

NOTE: The ABS warning lamp does not turn OFF in some cases unless the vehicle runs at 20 km/h or higher.

Q: Is the diagnosis code No.C1200 set?
YES : Return to Step 1.
NO : This diagnosis is complete.

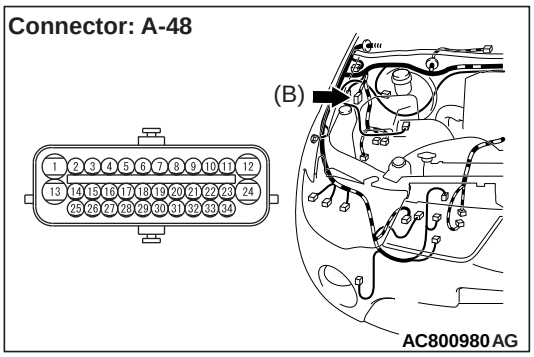

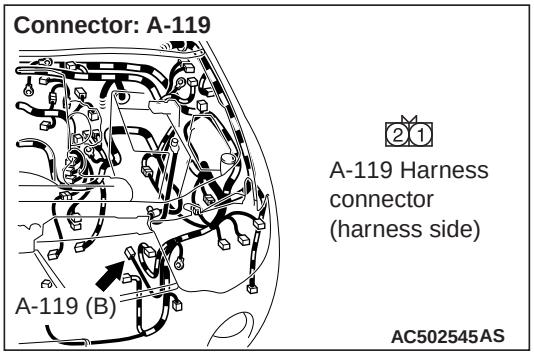

⚠ CAUTION

- **If there is any problem in the CAN bus lines, an incorrect diagnosis code may be set. Prior to this diagnosis, diagnose the CAN bus lines (Refer to GROUP 54C – CAN Bus Diagnostics Table .).**
- **Before replacing the ECU, ensure that the communication circuit is normal.**

OPERATION

- A toothed ABS rotor generates a voltage pulse as it moves across the pickup field of each wheel speed sensor.
- The wheel speed sensor transmit the frequency of the pulses to the ASTC-ECU.
- The hydraulic unit assembly (integrated with ASTC-ECU) modulates the amount of braking force individually applied to each wheel cylinder.

DIAGNOSIS CODE SET CONDITION

Diagnosis code No.C1205 is set when signal is not input due to breakage of the wire of the wheel speed sensor without the output of the code No.C1207.

PROBABLE CAUSES

Current trouble

- Damaged wiring harness and connectors
- Wheel speed sensor malfunction
- ASTC-ECU malfunction

<Incorrect>

<Correct> Attached sheet 4 (3/4) -(4/4)

Past trouble

- Carry out diagnosis with particular emphasis on wiring harness and connector failures between ASTC-ECU and the wheel speed sensor. For diagnosis procedures, refer to How to treat past trouble (GROUP 00 – How to Cope with Intermittent Malfunctions .).

DIAGNOSIS PROCEDURE

STEP 1. M.U.T.-III CAN bus diagnosis

Use M.U.T.-III to diagnose the CAN bus lines.

Q: Is the check result normal?

YES : Go to Step 3.

NO : Repair the CAN bus lines (Refer to GROUP 54C – CAN Bus Diagnostics Table .). On completion, go to Step 2.

STEP 2. Diagnosis code recheck after resetting CAN bus lines

(1) Erase the diagnosis code.

(2) Drive the vehicle at 15 km/h or more.

NOTE: The ABS warning lamp does not turn OFF in some cases unless the vehicle runs at 15 km/h or higher.

Q: Is the diagnosis code No.C1205 set?

YES : Go to Step 3.

NO : The procedure is complete.

STEP 3. M.U.T.-III diagnosis code

Check that the diagnosis code No.C1207 are also set.

Q: Is the diagnosis code No.C1207 also set?

YES : Perform the diagnosis for the diagnosis code No.C1207 (Refer to P.35C-50.).

NO : Go to Step 4.

STEP 4. M.U.T.-III data list

Check the following data list (Refer to P.35C-131.).

- Item No.01: FL wheel speed sensor

Q: Is the check result normal?

YES : Go to Step 8.

NO : Go to Step 5.

STEP 5. Connector check: A-48 ASTC-ECU connector, A-119 front wheel speed sensor (LH) connector

Q: Is the check result normal?

YES : Go to Step 6.
NO : Repair the defective connector. Then go to Step 9.

STEP 6. Resistance measurement at the A-48 ASTC-ECU connector
(1) Disconnect the A-48 ASTC-ECU connector.
(2) Measure the resistance between the A-48 ASTC-ECU connector terminal No.18 and terminal No.19.

OK: Continuity

Q: Is the check result normal?
YES : Go to Step 7.
NO : Repair the wiring harness. Then go to Step 9.

STEP 7. Check for wheel speed sensor as a single unit
Refer to P.35C-141.

Q: Is the check result normal?
YES : Go to Step 8.
NO : Replace the wheel speed sensor (Refer to P.35C-141.). Then go to Step 9.

STEP 8. Check whether the diagnosis code is reset.
(1) Erase the diagnosis code.
(2) Drive the vehicle at 15 km/h or more.

NOTE: The ABS warning lamp does not turn OFF in some cases unless the vehicle runs at 15 km/h or higher.

Q: Is the diagnosis code No.C1205 set?
YES : Replace the hydraulic unit (integrated with ASTC-ECU) (Refer to P.35C-140.). Then go to Step 9.
NO : Intermittent malfunction (Refer to GROUP 00 – How to Cope with Intermittent Malfunctions .).

STEP 9. Check whether the diagnosis code is reset.
(1) Erase the diagnosis code.
(2) Drive the vehicle at 15 km/h or more.

NOTE: The ABS warning lamp does not turn OFF in some cases unless the vehicle runs at 15 km/h or higher.

Q: Is the diagnosis code No.C1205 set?
YES : Return to Step 1.
NO : This diagnosis is complete.

<Incorrect>

Attached sheet 4 (3/4) -(4/4)

<Correct>

DIAGNOSIS PROCEDURE

STEP 1. M.U.T.-III CAN bus diagnosis
Use M.U.T.-III to diagnose the CAN bus lines.

Q: Is the check result normal?
YES : Go to Step 3.
NO : Repair the CAN bus lines (Refer to GROUP 54C – CAN Bus Diagnostics Table). On completion, go to Step 2.

STEP 2. Diagnosis code recheck after resetting CAN bus lines
(1) Drive the vehicle at 20 km/h or more.

NOTE: The ABS warning lamp does not turn OFF in some cases unless the vehicle runs at 20 km/h or higher.
(2) Turn the ignition switch from the ON position to the LOCK (OFF) position.

Q: Is the diagnosis code No.C1200 set?
YES : Go to Step 3.
NO : The procedure is complete.

STEP 3. M.U.T.-III diagnosis code
Check that the diagnosis code No.C1207 are also set.

Q: Is the diagnosis code No.C1207 also set?
YES : Perform the diagnosis for the diagnosis code No.C1207 (Refer to).
NO : Go to Step 4.

STEP 4. M.U.T.-III data list
Check the following data list (Refer to .).
- Item No.01: FL wheel speed sensor

Q: Is the check result normal?
YES : Go to Step 12.
NO : Go to Step 5.

STEP 5. Connector check: A-48 ASTC-ECU connector, A-119 front wheel speed sensor (LH) connector

Q: Is the check result normal?
YES : Go to Step 6.
NO : Repair the defective connector. Then go to Step 13.

STEP 6. Voltage measurement at the A-48 ASTC-ECU connector (Short circuit to power supply)
(1) Disconnect the A-48 ASTC-ECU connector.
(2) Turn the ignition switch to the ON position.
(3) Measure the voltage between the A-48 ASTC-ECU connector terminal No.18 and body earth or between the A-48 ASTC-ECU connector terminal No.19 and body earth.

OK: 1 V or less

Q: Is the check result normal?
YES : Go to Step 7.
NO : Go to Step 8.

STEP 7. Resistance measurement at the A-48 ASTC-ECU connector (Short circuit to earth)
(1) Disconnect the A-48 ASTC-ECU connector.
(2) Measure the resistance between the A-48 ASTC-ECU connector terminal No.18 and body earth

and between the A-48 ASTC-ECU connector terminal No.19 and body earth.

OK: Continuity

Q: Is the check result normal?
YES : Go to Step 9.
NO : Go to Step 8.

STEP 8. Wiring harness check between A-48 ASTC-ECU connector terminal No.18 and A-119 front wheel speed sensor (LH) connector terminal No.1 and between A-48 ASTC-ECU connector terminal No.19 and A-119 front wheel speed sensor (LH) connector terminal No.2

- Check for short circuit in front wheel speed sensor (LH) circuit for short to power supply or earth.

Q: Is the check result normal?
YES : Replace the front wheel speed sensor (LH) (Refer to). Then go to Step 13.
NO : Repair the wiring harness. Then go to Step 13.

STEP 9. Voltage or current measurement at A-119 front wheel speed sensor (LH) connector (Open circuit)

(1) Disconnect the A-119 front wheel speed sensor (LH) connector, and measure at the wiring harness side.
(2) Turn the ignition switch to the ON position.
(3) Measure the voltage between the power supply terminal of A-119 front wheel speed sensor (LH) connector terminal No.1 and the body earth.
(4) Measure the output current at the special tool test harness (MB991709) to connect between the A-119 front wheel speed sensor (LH) connector and the wiring harness connector (Refer to).

OK:
<Voltage> System voltage
<Current> 5 – 9 mA or 11 – 17 mA

Q: Is the check result normal?
YES : Go to Step 11.
NO : Go to Step 10.

STEP 10. Wiring harness check between A-48 ASTC-ECU connector terminal No.18 and A-119 front wheel speed sensor (LH) connector terminal No.1 and between A-48 ASTC-ECU connector terminal No.19 and A-119 front wheel speed sensor (LH) connector terminal No.2

- Check for open circuit in front wheel speed sensor (LH).

Q: Is the check result normal?
YES : Go to Step 11.
NO : Repair the wiring harness. Then go to Step 13.

STEP 11. Check for wheel speed sensor as a single unit

Refer to .

Q: Is the check result normal?
YES : Go to Step 12.
NO : Replace the front wheel speed sensor (LH) (Refer to). Then go to Step 13.

STEP 12. Check whether the diagnosis code is reset.

(1) Erase the diagnosis code.
(2) Drive the vehicle at 20 km/h or more.

NOTE: The ABS warning lamp does not turn OFF in some cases unless the vehicle runs at 20 km/h or higher.

Q: Is the diagnosis code No.C1200 set?
YES : Replace the hydraulic unit (integrated with ASTC-ECU) (Refer to). Then go to Step 13.
NO : Intermittent malfunction (Refer to GROUP 00 – How to Cope with Intermittent Malfunctions).

STEP 13. Check whether the diagnosis code is reset.

(1) Erase the diagnosis code.
(2) Drive the vehicle at 20 km/h or more.

NOTE: The ABS warning lamp does not turn OFF in some cases unless the vehicle runs at 20 km/h or higher.

Q: Is the diagnosis code No.C1200 set?
YES : Return to Step 1.
NO : This diagnosis is complete.

Connector: C-29 <RHD>

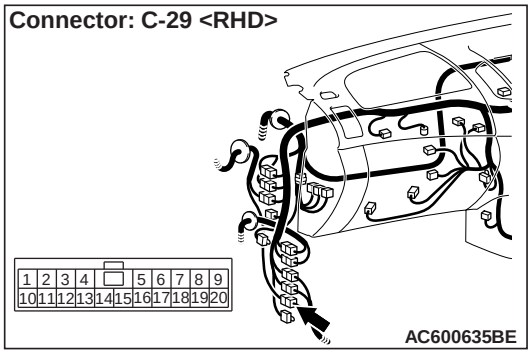

Connectors: F-10, F-12

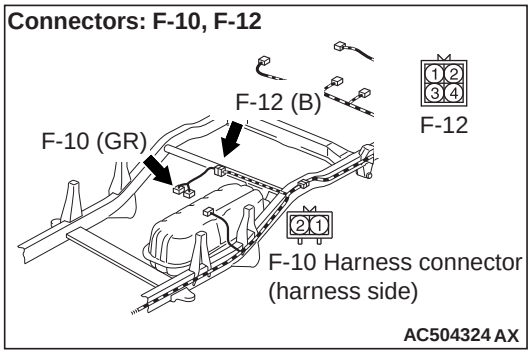

⚠ CAUTION

- **If there is any problem in the CAN bus lines, an incorrect diagnosis code may be set. Prior to this diagnosis, diagnose the CAN bus lines (Refer to GROUP 54C – CAN Bus Diagnostics Table .).**
- **Before replacing the ECU, ensure that the communication circuit is normal.**

OPERATION

- A toothed ABS rotor generates a voltage pulse as it moves across the pickup field of each wheel speed sensor.
- The wheel speed sensor transmit the frequency of the pulses to the ASTC-ECU.
- The hydraulic unit assembly (integrated with ASTC-ECU) modulates the amount of braking force individually applied to each wheel cylinder.

DIAGNOSIS CODE SET CONDITION

Diagnosis code No.C1210 is set when signal is not input due to breakage of the wire of the wheel speed sensor without the output of the code No.C1212.

PROBABLE CAUSES

<Incorrect>

Current trouble

- Damaged wiring harness and connectors
- Wheel speed sensor malfunction
- ASTC-ECU malfunction

<Correct> Attached sheet 5 (3/5) -(5/5) →

Past trouble

- Carry out diagnosis with particular emphasis on wiring harness and connector failures between ASTC-ECU and the wheel speed sensor. For diagnosis procedures, refer to How to treat past trouble (GROUP 00 – How to Cope with Intermittent Malfunctions .).

DIAGNOSIS PROCEDURE

STEP 1. M.U.T.-III CAN bus diagnosis

Use M.U.T.-III to diagnose the CAN bus lines.

Q: Is the check result normal?

YES : Go to Step 3.

NO : Repair the CAN bus lines (Refer to GROUP 54C – CAN Bus Diagnostics Table .). On completion, go to Step 2.

STEP 2. Diagnosis code recheck after resetting CAN bus lines

(1) Erase the diagnosis code.

(2) Drive the vehicle at 15 km/h or more.

NOTE: The ABS warning lamp does not turn OFF in some cases unless the vehicle runs at 15 km/h or higher.

Q: Is the diagnosis code No.C1210 set?

YES : Go to Step 3.

NO : The procedure is complete.

STEP 3. M.U.T.-III diagnosis code

Check that the diagnosis code No.C1212 are also set.

Q: Is the diagnosis code No.C1212 also set?

YES : Perform the diagnosis for the diagnosis code No.C1212 (Refer to P.35C-53.).

NO : Go to Step 4.

STEP 4. M.U.T.-III data list

Check the following data list (Refer to P.35C-131.).

- Item No.04: RR wheel speed sensor

Q: Is the check result normal?

YES : Go to Step 8.

NO : Go to Step 5.

STEP 5. Connector check: A-48 ASTC-ECU connector, C-29 intermediate connector, F-12 intermediate connector, F-10 rear wheel speed sensor (RH) connector

Q: Is the check result normal?

YES : Go to Step 6.
NO : Repair the defective connector. Then go to Step 9.

STEP 6. Resistance measurement at the A-48 ASTC-ECU connector
(1) Disconnect the A-48 ASTC-ECU connector.
(2) Measure the resistance between the A-48 ASTC-ECU connector terminal No.20 and terminal No.21.

OK: Continuity

Q: Is the check result normal?
YES : Go to Step 7.
NO : Repair the wiring harness. Then go to Step 9.

STEP 7. Check for wheel speed sensor as a single unit
Refer to P.35C-141.

Q: Is the check result normal?
YES : Go to Step 8.
NO : Replace the wheel speed sensor (Refer to P.35C-141.). Then go to Step 9.

STEP 8. Check whether the diagnosis code is reset.
(1) Erase the diagnosis code.
(2) Drive the vehicle at 15 km/h or more.

NOTE: The ABS warning lamp does not turn OFF in some cases unless the vehicle runs at 15 km/h or higher.

Q: Is the diagnosis code No.C1210 set?
YES : Replace the hydraulic unit (integrated with ASTC-ECU) (Refer to P.35C-140.). Then go to Step 9.
NO : Intermittent malfunction (Refer to GROUP 00 – How to Cope with Intermittent Malfunctions .).

STEP 9. Check whether the diagnosis code is reset.
(1) Erase the diagnosis code.
(2) Drive the vehicle at 15 km/h or more.

NOTE: The ABS warning lamp does not turn OFF in some cases unless the vehicle runs at 15 km/h or higher.

Q: Is the diagnosis code No.C1210 set?
YES : Return to Step 1.
NO : This diagnosis is complete.

<Incorrect>

Attached sheet 5 (3/5) -(5/5)

<Correct>

DIAGNOSIS PROCEDURE

STEP 1. M.U.T.-III CAN bus diagnosis
Use M.U.T.-III to diagnose the CAN bus lines.

Q: Is the check result normal?
YES : Go to Step 3.
NO : Repair the CAN bus lines (Refer to GROUP 54C – CAN Bus Diagnostics Table). On completion, go to Step 2.

STEP 2. Diagnosis code recheck after resetting CAN bus lines
(1) Drive the vehicle at 20 km/h or more.
NOTE: The ABS warning lamp does not turn OFF in some cases unless the vehicle runs at 20 km/h or higher.
(2) Turn the ignition switch from the ON position to the LOCK (OFF) position.

Q: Is the diagnosis code No.C1200 set?
YES : Go to Step 3.
NO : The procedure is complete.

STEP 3. M.U.T.-III diagnosis code
Check that the diagnosis code No.C1212 are also set.

Q: Is the diagnosis code No.C1212 also set?
YES : Perform the diagnosis for the diagnosis code No.C1212 (Refer to .).
NO : Go to Step 4.

STEP 4. M.U.T.-III data list
Check the following data list (Refer to .).
- Item No.04: RR wheel speed sensor

Q: Is the check result normal?
YES : Go to Step 12.
NO : Go to Step 5.

STEP 5. Connector check: A-48 ASTC-ECU connector, C-29 intermediate connector, F-12 intermediate connector, F-10 rear wheel speed sensor (RH) connector

Q: Is the check result normal?

YES : Go to Step 6.
NO : Repair the defective connector. Then go to Step 13.

STEP 6. Voltage measurement at the A-48 ASTC-ECU connector (Short circuit to power supply)
(1) Disconnect the A-48 ASTC-ECU connector.
(2) Turn the ignition switch to the ON position.
(3) Measure the voltage between the A-48 ASTC-ECU connector terminal No.20 and body earth or between the A-48 ASTC-ECU connector terminal No.21 and body earth.

OK: 1 V or less

Q: Is the check result normal?
YES : Go to Step 7.
NO : Go to Step 8.

STEP 7. Resistance measurement at the A-48 ASTC-ECU connector (Short circuit to earth)
(1) Disconnect the A-48 ASTC-ECU connector.
(2) Measure the resistance between the A-48 ASTC-ECU connector terminal No.20 and body earth and between the A-48 ASTC-ECU connector terminal No.21 and body earth.

OK: Continuity

Q: Is the check result normal?
YES : Go to Step 9.
NO : Go to Step 8.

STEP 8. Wiring harness check between A-48 ASTC-ECU connector terminal No.20 and F-10 rear wheel speed sensor (RH) connector terminal No.1 and between A-48 ASTC-ECU connector terminal No.21 and F-10 rear wheel speed sensor (RH) connector terminal No.2
- Check for short circuit in rear wheel speed sensor (RH) circuit for short to power supply or earth.

Q: Is the check result normal?
YES : Replace the rear wheel speed sensor (RH) (Refer to). Then go to Step 13.
NO : Repair the wiring harness. Then go to Step 13.

STEP 9. Voltage or current measurement at F-10 rear wheel speed sensor (RH) connector (Open circuit)
(1) Disconnect the F-10 rear wheel speed sensor (RH) connector, and measure at the wiring harness side.
(2) Turn the ignition switch to the ON position.
(3) Measure the voltage between the power supply terminal of F-10 rear wheel speed sensor (RH) connector terminal No.1 and the body earth.
(4) Measure the output current at the special tool test harness (MB991709) to connect between the F-10 rear wheel speed sensor (RH) connector and the wiring harness connector (Refer to).

OK:
<Voltage> System voltage
<Current> 5 – 9 mA or 11 – 17 mA

Q: Is the check result normal?
YES : Go to Step 11.
NO : Go to Step 10.

STEP 10. Wiring harness check between A-48 ASTC-ECU connector terminal No.20 and F-10 rear wheel speed sensor (RH) connector terminal No.1 and between A-48 ASTC-ECU connector terminal No.21 and F-10 rear wheel speed sensor (RH) connector terminal No.2
- Check for open circuit in rear wheel speed sensor (RH).

Q: Is the check result normal?
YES : Go to Step 11.
NO : Repair the wiring harness. Then go to Step 13.

STEP 11. Check for wheel speed sensor as a single unit
Refer to .

Q: Is the check result normal?
YES : Go to Step 12.
NO : Replace the rear wheel speed sensor (RH) (Refer to). Then go to Step 13.

STEP 12. Check whether the diagnosis code is reset.
(1) Erase the diagnosis code.
(2) Drive the vehicle at 20 km/h or more.

NOTE: The ABS warning lamp does not turn OFF in some cases unless the vehicle runs at 20 km/h or higher.

Q: Is the diagnosis code No.C1200 set?
YES : Replace the hydraulic unit (integrated with ASTC-ECU) (Refer to). Then go to Step 13.
NO : Intermittent malfunction (Refer to GROUP 00 – How to Cope with Intermittent Malfunctions).

STEP 13. Check whether the diagnosis code is reset.
(1) Erase the diagnosis code.

(2) Drive the vehicle at 20 km/h or more.

NOTE: The ABS warning lamp does not turn OFF in some cases unless the vehicle runs at 20 km/h or higher.

Q: Is the diagnosis code No.C1200 set?

YES : Return to Step 1.

NO : This diagnosis is complete.

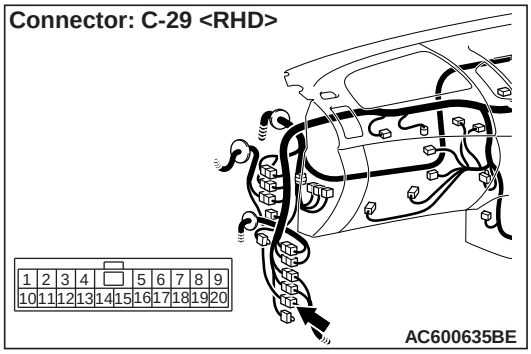

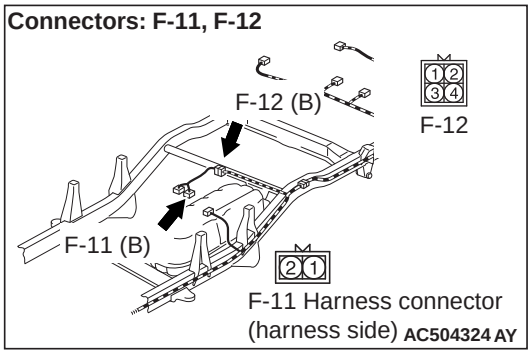

⚠ CAUTION

- **If there is any problem in the CAN bus lines, an incorrect diagnosis code may be set. Prior to this diagnosis, diagnose the CAN bus lines (Refer to GROUP 54C – CAN Bus Diagnostics Table .).**
- **Before replacing the ECU, ensure that the communication circuit is normal.**

OPERATION

- A toothed ABS rotor generates a voltage pulse as it moves across the pickup field of each wheel speed sensor.
- The wheel speed sensor transmit the frequency of the pulses to the ASTC-ECU.
- The hydraulic unit assembly (integrated with ASTC-ECU) modulates the amount of braking force individually applied to each wheel cylinder.

DIAGNOSIS CODE SET CONDITION

Diagnosis code No.C1215 is set when signal is not input due to breakage of the wire of the wheel speed sensor without the output of the code No.C1217.

PROBABLE CAUSES

Current trouble

- Damaged wiring harness and connectors
- Wheel speed sensor malfunction
- ASTC-ECU malfunction

<Incorrect>

<Correct> Attached sheet 6 (3/5) -(5/5) →

Past trouble

- Carry out diagnosis with particular emphasis on wiring harness and connector failures between ASTC-ECU and the wheel speed sensor. For diagnosis procedures, refer to How to treat past trouble (GROUP 00 – How to Cope with Intermittent Malfunctions .).

DIAGNOSIS PROCEDURE

STEP 1. M.U.T.-III CAN bus diagnosis

Use M.U.T.-III to diagnose the CAN bus lines.

Q: Is the check result normal?

YES : Go to Step 3.

NO : Repair the CAN bus lines (Refer to GROUP 54C – CAN Bus Diagnostics Table .). On completion, go to Step 2.

STEP 2. Diagnosis code recheck after resetting CAN bus lines

(1) Erase the diagnosis code.

(2) Drive the vehicle at 15 km/h or more.

NOTE: The ABS warning lamp does not turn OFF in some cases unless the vehicle runs at 15 km/h or higher.

Q: Is the diagnosis code No.C1215 set?

YES : Go to Step 3.

NO : The procedure is complete.

STEP 3. M.U.T.-III diagnosis code

Check that the diagnosis code No.C1217 are also set.

Q: Is the diagnosis code No.C1217 also set?

YES : Perform the diagnosis for the diagnosis code No.C1217 (Refer to P.35C-56.).

NO : Go to Step 4.

STEP 4. M.U.T.-III data list

Check the following data list (Refer to P.35C-131.).

- Item No.03: RL wheel speed sensor

Q: Is the check result normal?

YES : Go to Step 8.

NO : Go to Step 5.

STEP 5. Connector check: A-48 ASTC-ECU connector, C-29 intermediate connector, F-12 intermediate connector, F-11 rear wheel speed sensor (LH) connector

Q: Is the check result normal?

YES : Go to Step 6.
NO : Repair the defective connector. Then go to Step 9.

STEP 6. Resistance measurement at the A-48 ASTC-ECU connector
(1) Disconnect the A-48 ASTC-ECU connector.
(2) Measure the resistance between A-48 ASTC-ECU connector terminal No.8 and terminal No.9.

OK: Continuity

Q: Is the check result normal?
YES : Go to Step 7.
NO : Repair the wiring harness. Then go to Step 9.

STEP 7. Check for wheel speed sensor as a single unit
Refer to P.35C-141.

Q: Is the check result normal?
YES : Go to Step 8.
NO : Replace the wheel speed sensor (Refer to P.35C-141.). Then go to Step 9.

STEP 8. Check whether the diagnosis code is reset.
(1) Erase the diagnosis code.
(2) Drive the vehicle at 15 km/h or more.

NOTE: The ABS warning lamp does not turn OFF in some cases unless the vehicle runs at 15 km/h or higher.

Q: Is the diagnosis code No.C1215 set?
YES : Replace the hydraulic unit (integrated with ASTC-ECU) (Refer to P.35C-140.). Then go to Step 9.
NO : Intermittent malfunction (Refer to GROUP 00 – How to Cope with Intermittent Malfunctions .).

STEP 9. Check whether the diagnosis code is reset.
(1) Erase the diagnosis code.
(2) Drive the vehicle at 15 km/h or more.

NOTE: The ABS warning lamp does not turn OFF in some cases unless the vehicle runs at 15 km/h or higher.

Q: Is the diagnosis code No.C1215 set?
YES : Return to Step 1.
NO : This diagnosis is complete.

<Incorrect>

Attached sheet 6 (3/5) -(5/5)

<Correct>

DIAGNOSIS PROCEDURE

STEP 1. M.U.T.-III CAN bus diagnosis
Use M.U.T.-III to diagnose the CAN bus lines.

Q: Is the check result normal?
YES : Go to Step 3.
NO : Repair the CAN bus lines (Refer to GROUP 54C – CAN Bus Diagnostics Table). On completion, go to Step 2.

STEP 2. Diagnosis code recheck after resetting CAN bus lines
(1) Drive the vehicle at 20 km/h or more.
NOTE: The ABS warning lamp does not turn OFF in some cases unless the vehicle runs at 20 km/h or higher.
(2) Turn the ignition switch from the ON position to the LOCK (OFF) position.

Q: Is the diagnosis code No.C1200 set?
YES : Go to Step 3.
NO : The procedure is complete.

STEP 3. M.U.T.-III diagnosis code
Check that the diagnosis code No.C1217 are also set.

Q: Is the diagnosis code No.C1217 also set?
YES : Perform the diagnosis for the diagnosis code No.C1217 (Refer to .).
NO : Go to Step 4.

STEP 4. M.U.T.-III data list
Check the following data list (Refer to .).
- Item No.03: RL wheel speed sensor

Q: Is the check result normal?
YES : Go to Step 12.
NO : Go to Step 5.

STEP 5. Connector check: A-48 ASTC-ECU connector, C-29 intermediate connector, F-12 intermediate connector, F-11 rear wheel speed sensor (LH) connector

Q: Is the check result normal?

YES : Go to Step 6.
NO : Repair the defective connector. Then go to Step 13.

STEP 6. Voltage measurement at the A-48 ASTC-ECU connector (Short circuit to power supply)
(1) Disconnect the A-48 ASTC-ECU connector.
(2) Turn the ignition switch to the ON position.
(3) Measure the voltage between the A-48 ASTC-ECU connector terminal No.8 and body earth or between the A-48 ASTC-ECU connector terminal No.9 and body earth.

OK: 1 V or less

Q: Is the check result normal?
YES : Go to Step 7.
NO : Go to Step 8.

STEP 7. Resistance measurement at the A-48 ASTC-ECU connector (Short circuit to earth)
(1) Disconnect the A-48 ASTC-ECU connector.
(2) Measure the resistance between the A-48 ASTC-ECU connector terminal No.8 and body earth and between the A-48 ASTC-ECU connector terminal No.9 and body earth.

OK: Continuity

Q: Is the check result normal?
YES : Go to Step 9.
NO : Go to Step 8.

STEP 8. Wiring harness check between A-48 ASTC-ECU connector terminal No.8 and F-11 rear wheel speed sensor (LH) connector terminal No.1 and between A-48 ASTC-ECU connector terminal No.9 and F-11 rear wheel speed sensor (LH) connector terminal No.2
- Check for short circuit in rear wheel speed sensor (LH) circuit for short to power supply or earth.

Q: Is the check result normal?
YES : Replace the rear wheel speed sensor (LH) (Refer to). Then go to Step 13.
NO : Repair the wiring harness. Then go to Step 13.

STEP 9. Voltage or current measurement at F-11 rear wheel speed sensor (LH) connector (Open circuit)
(1) Disconnect the F-11 rear wheel speed sensor (LH) connector, and measure at the wiring harness side.
(2) Turn the ignition switch to the ON position.
(3) Measure the voltage between the power supply terminal of F-11 rear wheel speed sensor (LH) connector terminal No.1 and the body earth.
(4) Measure the output current at the special tool test harness (MB991709) to connect between the F-11 rear wheel speed sensor (LH) connector and the wiring harness connector (Refer to).

OK:
<Voltage> System voltage
<Current> 5 – 9 mA or 11 – 17 mA

Q: Is the check result normal?
YES : Go to Step 11.
NO : Go to Step 10.

STEP 10. Wiring harness check between A-48 ASTC-ECU connector terminal No.8 and F-11 rear wheel speed sensor (LH) connector terminal No.1 and between A-48 ASTC-ECU connector terminal No.9 and F-11 rear wheel speed sensor (LH) connector terminal No.2
- Check for open circuit in rear wheel speed sensor (LH).

Q: Is the check result normal?
YES : Go to Step 11.
NO : Repair the wiring harness. Then go to Step 13.

STEP 11. Check for wheel speed sensor as a single unit
Refer to .

Q: Is the check result normal?
YES : Go to Step 12.
NO : Replace the rear wheel speed sensor (LH) (Refer to). Then go to Step 13.

STEP 12. Check whether the diagnosis code is reset.
(1) Erase the diagnosis code.
(2) Drive the vehicle at 20 km/h or more.

NOTE: The ABS warning lamp does not turn OFF in some cases unless the vehicle runs at 20 km/h or higher.

Q: Is the diagnosis code No.C1200 set?
YES : Replace the hydraulic unit (integrated with ASTC-ECU) (Refer to). Then go to Step 13.
NO : Intermittent malfunction (Refer to GROUP 00 – How to Cope with Intermittent Malfunctions).

STEP 13. Check whether the diagnosis code is reset.
(1) Erase the diagnosis code.

(2) Drive the vehicle at 20 km/h or more.

NOTE: The ABS warning lamp does not turn OFF in some cases unless the vehicle runs at 20 km/h or higher.

Q: Is the diagnosis code No.C1200 set?

YES : Return to Step 1.

NO : This diagnosis is complete.

Attached sheet 7 (1/6)

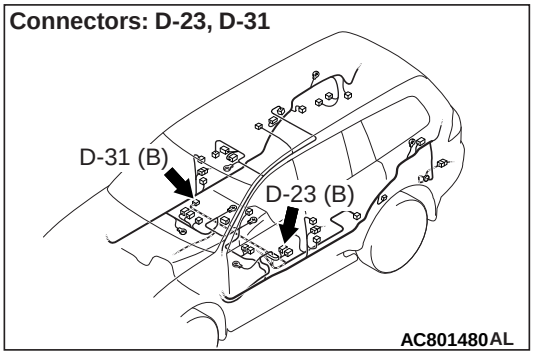

⚠ CAUTION

- **If there is any problem in the CAN bus lines, an incorrect diagnosis code may be set. Prior to this diagnosis, diagnose the CAN bus lines (Refer to GROUP 54C – CAN Bus Diagnostics Table.).**
- **Before replacing the ECU, ensure that the communication circuit is normal.**

OPERATION

- A toothed ABS rotor generates a pulse signal as it moves across the pickup field of each wheel speed sensor.
- The wheel speed sensors transmit the frequency of the pulses to the ABS-ECU.
- The hydraulic unit assembly (integrated with ABS-ECU) modulates the amount of braking force individually applied to each wheel cylinder.

DIAGNOSIS CODE SET CONDITION

Diagnosis codes No.C1200, C1205, C1210 or C1215 is set when signal is not input due to breakage of the wires of the four wheel speed sensors without the outputs of the codes No.C1202, C1207, C1212 or C1217.

PROBABLE CAUSES

Current trouble

- Damaged wiring harness and connectors
- Wheel speed sensor malfunction
- ABS-ECU malfunction

Past trouble

- Carry out diagnosis with particular emphasis on wiring harness and connector failures between ABS-ECU and the wheel speed sensor. For diagnosis procedures, refer to How to treat past trouble (GROUP 00 – How to Cope with Intermittent Malfunctions.).

<Incorrect>

<Correct> Attached sheet 7 (3/6) -(6/6)

DIAGNOSIS PROCEDURE

STEP 1. M.U.T.-III CAN bus diagnosis

Use M.U.T.-III to diagnose the CAN bus lines.

Q: Is the check result normal?

YES : Go to Step 3.

NO : Repair the CAN bus lines (Refer to GROUP 54C – CAN Bus Diagnostics Table.). On completion, go to Step 2.

STEP 2. Diagnosis code recheck after resetting CAN bus lines

(1) Erase the diagnosis code.

(2) Drive the vehicle at 15 km/h or more.

NOTE: The ABS warning lamp does not turn OFF in some cases unless the vehicle runs at 15 km/h or higher.

Q: Are the diagnosis codes No.C1200, C1205, C1210 or C1215 set?

YES : Go to Step 3.

NO : The procedure is complete.

STEP 3. M.U.T.-III diagnosis code

Check that the diagnosis codes No.C1202, C1207, C1212 or C1217 are also set.

Q: Are the diagnosis codes No.C1202, C1207, C1212 or C1217 also set?

YES : Perform the diagnosis for the diagnosis codes No.C1202, C1207, C1212 or C1217 (Refer to P.35B-39.).

NO : Go to Step 4.

STEP 4. M.U.T.-III data list

Check the following data list.

- Item No.01: FL wheel speed sensor
- Item No.02: FR wheel speed sensor
- Item No.03: RL wheel speed sensor
- Item No.04: RR wheel speed sensor

Q: Is the check result normal?

YES : Go to Step 8.

NO : Go to Step 5.

STEP 5. Connector check: A-01 ABS-ECU connector, A-130 front wheel speed sensor (RH) connector, A-121 front wheel speed sensor (LH) connector, D-31 rear wheel speed sensor (RH) connector, D-23 rear wheel speed sensor (LH) connector and C-35 intermediate connector

Q: Is the check result normal?

YES : Go to Step 6.
NO : Repair the defective connector. Then go to Step 9.

STEP 6. Resistance measurement at the A-01 ABS-ECU connector
(1) Disconnect the A-01 ABS-ECU connector.
(2) Measure the resistance between the A-01 ABS-ECU connector terminals.

Code No.C1200 is set
- Between terminal No.6 and No.7

Code No.C1205 is set
- Between terminal No.18 and No.19

Code No.C1210 is set
- Between terminal No.20 and No.21

Code No.C1215 is set
- Between terminal No.8 and No.9

OK: Continuity

Q: Is the check result normal?
YES : Go to Step 7.
NO : Repair the wiring harness. Then go to Step 9.

STEP 7. Check for wheel speed sensor as a single unit
Refer to P.35B-38.

Q: Is the check result normal?
YES : Go to Step 8.
NO : Replace the wheel speed sensor (Refer to P.35B-37.). Then go to Step 9.

STEP 8. Check whether the diagnosis code is reset.
(1) Erase the diagnosis code.
(2) Drive the vehicle at 15 km/h or more.

NOTE: The ABS warning lamp does not turn OFF in some cases unless the vehicle runs at 15 km/h or higher.

Q: Are the diagnosis codes No.C1200, C1205, C1210 or C1215 set?
YES : Replace the hydraulic unit (integrated with ABS-ECU) (Refer to P.35B-37.). Then go to Step 9.
NO : Intermittent malfunction (Refer to GROUP 00 – How to Cope with Intermittent Malfunctions.).

STEP 9. Check whether the diagnosis code is reset.
(1) Erase the diagnosis code.
(2) Drive the vehicle at 15 km/h or more.

NOTE: The ABS warning lamp does not turn OFF in some cases unless the vehicle runs at 15 km/h or higher.

Q: Are the diagnosis codes No.C1200, C1205, C1210 or C1215 set?
YES : Return to Step 1.
NO : This diagnosis is complete.

<Incorrect>

Attached sheet 7 (3/6) -(6/6)

<Correct>

DIAGNOSIS PROCEDURE

STEP 1. M.U.T.-III CAN bus diagnosis

Use M.U.T.-III to diagnose the CAN bus lines.

Q: Is the check result normal?

YES : Go to Step 3.

NO : Repair the CAN bus lines (Refer to GROUP 54C – CAN Bus Diagnostics Table). On completion, go to Step 2.

STEP 2. Diagnosis code recheck after resetting CAN bus lines

(1) Drive the vehicle at 20 km/h or more.

NOTE: The ABS warning lamp does not turn OFF in some cases unless the vehicle runs at 20 km/h or higher.

(2) Turn the ignition switch from the ON position to the LOCK (OFF) position.

Q: Are the diagnosis codes No.C1200, C1205, C1210 or C1215 set?

YES : Go to Step 3.

NO : The procedure is complete.

STEP 3. M.U.T.-III diagnosis code

Check that the diagnosis codes No.C1202, C1207, C1212 or C1217 are also set.

Q: Are the diagnosis codes No.C1202, C1207, C1212 or C1217 also set?

YES : Perform the diagnosis for the diagnosis codes No.C1202, C1207, C1212 or C1217 (Refer to).

NO : Go to Step 4.

STEP 4. M.U.T.-III data list

Check the following data list.

- Item No.01: FL wheel speed sensor
- Item No.02: FR wheel speed sensor
- Item No.03: RL wheel speed sensor
- Item No.04: RR wheel speed sensor

Q: Is the check result normal?

YES : Go to Step 18.

NO : Go to Step 5.

STEP 5. Connector check: A-01 ABS-ECU connector, A-130 front wheel speed sensor (RH) connector <Code No.C1200>, A-121 front wheel speed sensor (LH) connector <Code No.C1205>, D-31 rear wheel speed sensor (RH) connector <Code No.C1210>, D-23 rear wheel speed sensor (LH) connector <Code No.C1215>, C-35 intermediate connector <Code No.C1210 or No.C1215>

Q: Is the check result normal?
YES : Go to Step 6.
NO : Repair the defective connector. Then go to Step 19.

STEP 6. Voltage measurement at the A-01 ABS-ECU connector
(1) Disconnect the A-01 ABS-ECU connector.
(2) Turn the ignition switch to the ON position.
(3) Measure the voltage between the A-01 ABS-ECU connector terminals.

Code No.C1200 is set
- Between terminal No.6 and body earth or between terminal No.7 and body earth

Code No.C1205 is set
- Between terminal No.18 and body earth or between terminal No.19 and body earth

Code No.C1210 is set
- Between terminal No.20 and body earth or between terminal No.21 and body earth

Code No.C1215 is set
- Between terminal No.8 and body earth or between terminal No.9 and body earth

OK: 1 V or less

Q: Is the check result normal?
YES : Go to Step 7.
NO (Code No.C1200 NG) : Go to Step 8.
NO (Code No.C1205 NG) : Go to Step 9.
NO (Code No.C1210 NG) : Go to Step 10.
NO (Code No.C1215 NG) : Go to Step 11.

STEP 7. Resistance measurement at the A-01 ABS-ECU connector
(1) Disconnect the A-01 ABS-ECU connector.
(2) Measure the resistance between the A-01 ABS-ECU connector terminals.

Code No.C1200 is set
- Between terminal No.6 and body earth or between terminal No.7 and body earth

Code No.C1205 is set
- Between terminal No.18 and body earth or between terminal No.19 and body earth

Code No.C1210 is set
- Between terminal No.20 and body earth or between terminal No.21 and body earth

Code No.C1215 is set
- Between terminal No.8 and body earth or between terminal No.9 and body earth

OK: 1 V or less

Q: Is the check result normal?
YES : Go to Step 12.
NO (Code No.C1200 NG) : Go to Step 8.
NO (Code No.C1205 NG) : Go to Step 9.
NO (Code No.C1210 NG) : Go to Step 10.
NO (Code No.C1215 NG) : Go to Step 11.

STEP 8. Wiring harness check between A-01 ABS-ECU connector terminal No.6 and A-130 front wheel speed sensor (RH) connector terminal No.1 and between A-01 ABS-ECU connector terminal No.7 and A-130 front wheel speed sensor (RH) connector terminal No.2
- Check for short circuit in front wheel speed sensor (RH) circuit for short to power supply or earth.

Q: Is the check result normal?
YES : Replace the front wheel speed sensor (RH) (Refer to). Then go to Step 19.
NO : Repair the wiring harness. Then go to Step 19.

STEP 9. Wiring harness check between A-01 ABS-ECU connector terminal No.18 and A-121 front wheel speed sensor (LH) connector terminal No.1 and between A-01 ABS-ECU connector terminal No.19 and A-121 front wheel speed sensor (LH) connector terminal No.2
- Check for short circuit in front wheel speed sensor (LH) circuit for short to power supply or earth.

Q: Is the check result normal?
YES : Replace the front wheel speed sensor (LH) (Refer to). Then go to Step 19.
NO : Repair the wiring harness. Then go to Step 19.

STEP 10. Wiring harness check between A-01 ABS-ECU connector terminal No.20 and D-31 rear wheel speed sensor (RH) connector terminal No.1 and between A-01 ABS-ECU connector terminal No.21 and D-31 rear wheel speed sensor (RH) connector terminal No.2

- Check for short circuit in rear wheel speed sensor (RH) circuit for short to power supply or earth.

Q: Is the check result normal?

YES : Replace the rear wheel speed sensor (RH) (Refer to). Then go to Step 19.

NO : Repair the wiring harness. Then go to Step 19.

STEP 11. Wiring harness check between A-01 ABS-ECU connector terminal No.8 and D-23 rear wheel speed sensor (LH) connector terminal No.1 and between A-01 ABS-ECU connector terminal No.21 and D-23 rear wheel speed sensor (LH) connector terminal No.2

- Check for short circuit in rear wheel speed sensor (LH) circuit for short to power supply or earth.

Q: Is the check result normal?

YES : Replace the rear wheel speed sensor (LH) (Refer to). Then go to Step 19.

NO : Repair the wiring harness. Then go to Step 19.

STEP 12. Voltage or current measurement at A-130 front wheel speed sensor (RH) connector <Code No.C1200>, A-121 front wheel speed sensor (LH) connector <Code No.C1205>, D-31 rear wheel speed sensor (RH) connector <Code No.C1215>, D-23 rear wheel speed sensor (LH) connector <Code No.C1215> (Open circuit)

(1) Disconnect the each wheel speed sensors connector, and measure at the wiring harness side.
(2) Turn the ignition switch to the ON position.
(3) Measure the voltage between the power supply terminal of each wheel speed sensor connector terminal No. 1 and the body earth.
(4) Measure the output current at the special tool test harness (MB991709) to connect between each wheel speed sensor connector and the wiring harness connector (Refer to).

OK:
<Voltage> System voltage
<Current> 5 – 9 mA or 11 – 17 mA

Q: Is the check result normal?

YES : Go to Step 17.
NO (Code No.C1200 NG) : Go to Step 13.
NO (Code No.C1205 NG) : Go to Step 14.
NO (Code No.C1210 NG) : Go to Step 15.
NO (Code No.C1215 NG) : Go to Step 16.

STEP 13. Wiring harness check between A-01 ABS-ECU connector terminal No.6 and A-130 front wheel speed sensor (RH) connector terminal No.1 and between A-01 ABS-ECU connector terminal No.7 and A-130 front wheel speed sensor (RH) connector terminal No.2

- Check for open circuit in front wheel speed sensor (RH).

Q: Is the check result normal?

YES : Go to Step 17.

NO : Repair the wiring harness. Then go to Step 19.

STEP 14. Wiring harness check between A-01 ABS-ECU connector terminal No.18 and A-121 front wheel speed sensor (LH) connector terminal No.1 and between A-01 ABS-ECU connector terminal No.19 and A-121 front wheel speed sensor (LH) connector terminal No.2

- Check for open circuit in front wheel speed sensor (LH).

Q: Is the check result normal?

YES : Go to Step 17.

NO : Repair the wiring harness. Then go to Step 19.

STEP 15. Wiring harness check between A-01 ABS-ECU connector terminal No.20 and D-31 rear wheel speed sensor (RH) connector terminal No.1 and between A-01 ABS-ECU connector terminal No.21 and D-31 rear wheel speed sensor (RH) connector terminal No.2

- Check for open circuit in rear wheel speed sensor (RH).

Q: Is the check result normal?

YES : Go to Step 17.

NO : Repair the wiring harness. Then go to Step 19.

STEP 16. Wiring harness check between A-01 ABS-ECU connector terminal No.8 and D-23 rear wheel speed sensor (LH) connector terminal No.1 and between A-01 ABS-ECU connector terminal No.21 and D-23 rear wheel speed sensor (LH) connector terminal No.2

- Check for open circuit in rear wheel speed sensor (LH).

Q: Is the check result normal?
YES : Go to Step 17.
NO : Repair the wiring harness. Then go to Step 19.

STEP 17. Check for wheel speed sensor as a single unit
Refer to .

Q: Is the check result normal?
YES : Go to Step 18.
NO : Replace the wheel speed sensor (Refer to). Then go to Step 19.

STEP 18. Check whether the diagnosis code is reset.
(1) Erase the diagnosis code.
(2) Drive the vehicle at 20 km/h or more.

NOTE: The ABS warning lamp does not turn OFF in some cases unless the vehicle runs at 20 km/h or higher.

Q: Are the diagnosis codes No.C1200, C1205, C1210 or C1215 set?
YES : Replace the hydraulic unit (integrated with ABS-ECU) (Refer to). Then go to Step 19.
NO : Intermittent malfunction (Refer to GROUP 00 – How to Cope with Intermittent Malfunctions).

STEP 19. Check whether the diagnosis code is reset.
(1) Erase the diagnosis code.
(2) Drive the vehicle at 20 km/h or more.

NOTE: The ABS warning lamp does not turn OFF in some cases unless the vehicle runs at 20 km/h or higher.

Q: Are the diagnosis codes No.C1200, C1205, C1210 or C1215 set?
YES : Return to Step 1.
NO : This diagnosis is complete.

- The hydraulic unit assembly (integrated with ASTC-ECU) modulates the amount of braking force individually applied to each wheel cylinder.

DIAGNOSIS CODE SET CONDITION

Diagnosis code No.C1200 is set when signal is not input due to breakage of the wire of the wheel speed sensor without the output of the code No.C1202.

PROBABLE CAUSES

Current trouble

- Damaged wiring harness and connectors
- Wheel speed sensor malfunction
- ASTC-ECU malfunction

Past trouble

- Carry out diagnosis with particular emphasis on wiring harness and connector failures between ASTC-ECU and the wheel speed sensor. For diagnosis procedures, refer to How to treat past trouble (GROUP 00 – How to Cope with Intermittent Malfunctions.).

DIAGNOSIS PROCEDURE

STEP 1. M.U.T.-III CAN bus diagnosis

Use M.U.T.-III to diagnose the CAN bus lines.

Q: Is the check result normal?

YES : Go to Step 3.

NO : Repair the CAN bus lines (Refer to GROUP 54C – CAN Bus Diagnostics Table.). On completion, go to Step 2.

STEP 2. Diagnosis code recheck after resetting CAN bus lines

(1) Erase the diagnosis code.

(2) Drive the vehicle at 15 km/h or more.

NOTE: The ABS warning lamp does not turn OFF in some cases unless the vehicle runs at 15 km/h or higher.

Q: Is the diagnosis code No.C1200 set?

YES : Go to Step 3.

NO : The procedure is complete.

STEP 3. M.U.T.-III diagnosis code

Check that the diagnosis code No.C1202 are also set.

Q: Is the diagnosis code No.C1202 also set?

YES : Perform the diagnosis for the diagnosis code No.C1202 (Refer to P.35C-28.).

NO : Go to Step 4.

STEP 4. M.U.T.-III data list

Check the following data list.

- Item No.02: FR wheel speed sensor

Q: Is the check result normal?

YES : Go to Step 8.

NO : Go to Step 5.

STEP 5. Connector check: A-68 ASTC-ECU connector, A-130 front wheel speed sensor (RH) connector

Q: Is the check result normal?

YES : Go to Step 6.

NO : Repair the defective connector. Then go to Step 9.

STEP 6. Resistance measurement at the A-68 ASTC-ECU connector

(1) Disconnect the A-68 ASTC-ECU connector.

(2) Measure the resistance between the A-68 ASTC-ECU connector terminal No.6 and No.7.

OK: Continuity

Q: Is the check result normal?

YES : Go to Step 7.

NO : Repair the wiring harness. Then go to Step 9.

STEP 7. Check for wheel speed sensor as a single unit

Refer to P.35C-76.

Q: Is the check result normal?

YES : Go to Step 8.

NO : Replace the wheel speed sensor (Refer to P.35C-76.). Then go to Step 9.

STEP 8. Check whether the diagnosis code is reset.

(1) Erase the diagnosis code.

(2) Drive the vehicle at 15 km/h or more.

NOTE: The ABS warning lamp does not turn OFF in some cases unless the vehicle runs at 15 km/h or higher.

Q: Is the diagnosis code No.C1200 set?

YES : Replace the hydraulic unit (integrated with ASTC-ECU) (Refer to P.35C-75.). Then go to Step 9.

NO : Intermittent malfunction (Refer to GROUP 00 – How to Cope with Intermittent Malfunctions.).

<Incorrect> <Correct>

Attached sheet 8 (3/4) -(4/4)

STEP 9. Check whether the diagnosis code is reset.
(1) Erase the diagnosis code.
(2) Drive the vehicle at 15 km/h or more.

NOTE: The ABS warning lamp does not turn OFF in some cases unless the vehicle runs at 15 km/h or higher.

Q: Is the diagnosis code No.C1200 set?
YES : Return to Step 1.
NO : This diagnosis is complete.

<Incorrect>

Code No.C1205: Wheel speed sensor (FL) (signal open circuit)

Attached sheet 8 (3/4) -(4/4)

<Correct>

Wheel Speed Sensor Circuit

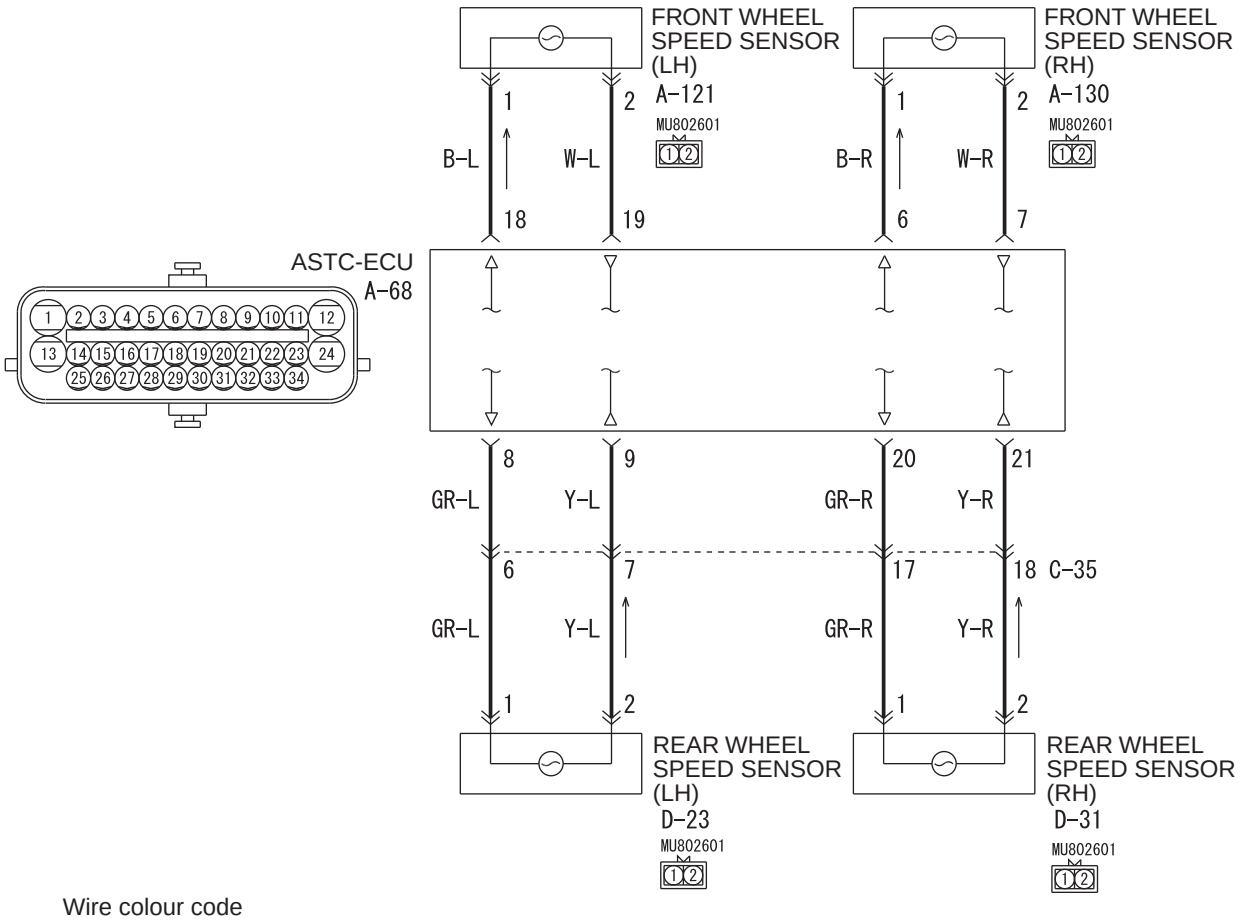

Wire colour code
B : Black LG : Light green G : Green L : Blue W : White Y : Yellow SB : Sky blue
BR : Brown O : Orange GR : Grey R : Red P : Pink V : Violet PU : Purple SI : Silver

ACB01301

Connector: A-68

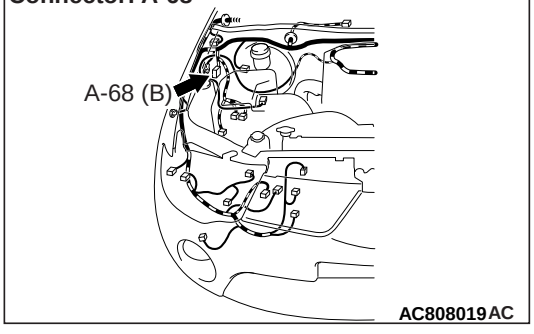

AC808019AC

Connector: A-121

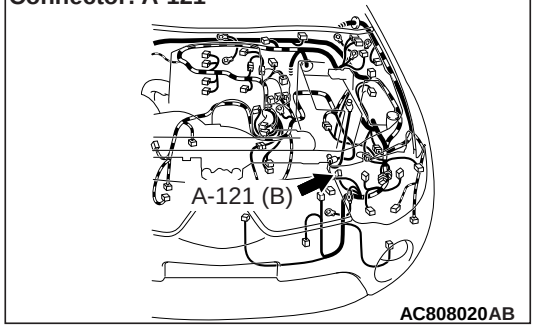

AC808020AB

DIAGNOSIS PROCEDURE

STEP 1. M.U.T.-III CAN bus diagnosis
Use M.U.T.-III to diagnose the CAN bus lines.

Q: Is the check result normal?
YES : Go to Step 3.
NO : Repair the CAN bus lines (Refer to GROUP 54C – CAN Bus Diagnostics Table). On completion, go to Step 2.

STEP 2. Diagnosis code recheck after resetting CAN bus lines
(1) Drive the vehicle at 20 km/h or more.
NOTE: The ABS warning lamp does not turn OFF in some cases unless the vehicle runs at 20 km/h or higher.
(2) Turn the ignition switch from the ON position to the LOCK (OFF) position.

Q: Is the diagnosis code No.C1200 set?
YES : Go to Step 3.
NO : The procedure is complete.

STEP 3. M.U.T.-III diagnosis code
Check that the diagnosis code No.C1202 are also set.

Q: Is the diagnosis code No.C1202 also set?
YES : Perform the diagnosis for the diagnosis code No.C1202 (Refer to).
NO : Go to Step 4.

STEP 4. M.U.T.-III data list
Check the following data list.
- Item No.02: FR wheel speed sensor

Q: Is the check result normal?
YES : Go to Step 12.
NO : Go to Step 5.

STEP 5. Connector check: A-68 ASTC-ECU connector, A-130 front wheel speed sensor (RH) connector

Q: Is the check result normal?
YES : Go to Step 6.
NO : Repair the defective connector. Then go to Step 13.

STEP 6. Voltage measurement at the A-68 ASTC-ECU connector (Short circuit to power supply)
(1) Disconnect the A-68 ASTC-ECU connector.
(2) Turn the ignition switch to the ON position.
(3) Measure the voltage between the A-68 ASTC-ECU connector terminal No.6 and body earth or between the A-48 ASTC-ECU connector terminal No.7 and body earth.
OK: 1 V or less

Q: Is the check result normal?
YES : Go to Step 7.
NO : Go to Step 8.

STEP 7. Resistance measurement at the A-68 ASTC-ECU connector (Short circuit to earth)
(1) Disconnect the A-68 ASTC-ECU connector.
(2) Measure the resistance between the A-68 ASTC-ECU connector terminal No.6 and body earth and between the A-68 ASTC-ECU connector terminal No.7 and body earth.
OK: Continuity

Q: Is the check result normal?
YES : Go to Step 9.
NO : Go to Step 8.

STEP 8. Wiring harness check between A-68 ASTC-ECU connector terminal No.6 and A-130 front wheel speed sensor (RH) connector terminal No.1 and between A-68 ASTC-ECU connector terminal No.7 and A-130 front wheel speed sensor (RH) connector terminal No.2
- Check for short circuit in front wheel speed sensor (RH) circuit for short to power supply or earth.

Q: Is the check result normal?

YES : Replace the front wheel speed sensor (RH) (Refer to). Then go to Step 13.
NO : Repair the wiring harness. Then go to Step 13.

STEP 9. Voltage or current measurement at A-130 front wheel speed sensor (RH) connector (Open circuit)

(1) Disconnect the A-130 front wheel speed sensor (RH) connector, and measure at the wiring harness side.
(2) Turn the ignition switch to the ON position.
(3) Measure the voltage between the power supply terminal of A-130 front wheel speed sensor (RH) connector terminal No.1 and the body earth.
(4) Measure the output current at the special tool test harness (MB991709) to connect between the A-130 front wheel speed sensor (RH) connector and the wiring harness connector (Refer to).

OK:
<Voltage> System voltage
<Current> 5 – 9 mA or 11 – 17 mA

Q: Is the check result normal?
YES : Go to Step 11.
NO : Go to Step 10.

STEP 10. Wiring harness check between A-68 ASTC-ECU connector terminal No.6 and A-130 front wheel speed sensor (RH) connector terminal No.1 and between A-68 ASTC-ECU connector terminal No.7 and A-130 front wheel speed sensor (RH) connector terminal No.2

- Check for open circuit in front wheel speed sensor (RH).

Q: Is the check result normal?
YES : Go to Step 11.
NO : Repair the wiring harness. Then go to Step 13.

STEP 11. Check for wheel speed sensor as a single unit

Refer to .

Q: Is the check result normal?
YES : Go to Step 12.
NO : Replace the front wheel speed sensor (RH) (Refer to). Then go to Step 13.

STEP 12. Check whether the diagnosis code is reset.

(1) Erase the diagnosis code.
(2) Drive the vehicle at 20 km/h or more.

NOTE: The ABS warning lamp does not turn OFF in some cases unless the vehicle runs at 20 km/h or higher.

Q: Is the diagnosis code No.C1200 set?
YES : Replace the hydraulic unit (integrated with ASTC-ECU) (Refer to). Then go to Step 13.
NO : Intermittent malfunction (Refer to GROUP 00 – How to Cope with Intermittent Malfunctions).

STEP 13. Check whether the diagnosis code is reset.

(1) Erase the diagnosis code.
(2) Drive the vehicle at 20 km/h or more.

NOTE: The ABS warning lamp does not turn OFF in some cases unless the vehicle runs at 20 km/h or higher.

Q: Is the diagnosis code No.C1200 set?
YES : Return to Step 1.
NO : This diagnosis is complete.

Attached sheet 9 (1/4)

⚠ CAUTION
- **If there is any problem in the CAN bus lines, an incorrect diagnosis code may be set. Prior to this diagnosis, diagnose the CAN bus lines (Refer to GROUP 54C – CAN Bus Diagnostics Table.).**
- **Before replacing the ECU, ensure that the communication circuit is normal.**

OPERATION
- A toothed ABS rotor generates a pulse signal as it moves across the pickup field of each wheel speed sensor.
- The wheel speed sensor transmit the frequency of the pulses to the ASTC-ECU.
- The hydraulic unit assembly (integrated with ASTC-ECU) modulates the amount of braking force individually applied to each wheel cylinder.

DIAGNOSIS CODE SET CONDITION
Diagnosis code No.C1205 is set when signal is not input due to breakage of the wire of the wheel speed sensor without the output of the code No.C1207.

PROBABLE CAUSES

Current trouble
- Damaged wiring harness and connectors
- Wheel speed sensor malfunction
- ASTC-ECU malfunction

Past trouble
- Carry out diagnosis with particular emphasis on wiring harness and connector failures between ASTC-ECU and the wheel speed sensor. For diagnosis procedures, refer to How to treat past trouble (GROUP 00 – How to Cope with Intermittent Malfunctions.).

DIAGNOSIS PROCEDURE

STEP 1. M.U.T.-III CAN bus diagnosis
Use M.U.T.-III to diagnose the CAN bus lines.

Q: Is the check result normal?
YES : Go to Step 3.
NO : Repair the CAN bus lines (Refer to GROUP 54C – CAN Bus Diagnostics Table.). On completion, go to Step 2.

STEP 2. Diagnosis code recheck after resetting CAN bus lines
(1) Erase the diagnosis code.
(2) Drive the vehicle at 15 km/h or more.

NOTE: The ABS warning lamp does not turn OFF in some cases unless the vehicle runs at 15 km/h or higher.

Q: Is the diagnosis code No.C1205 set?
YES : Go to Step 3.
NO : The procedure is complete.

STEP 3. M.U.T.-III diagnosis code
Check that the diagnosis code No.C1207 are also set.

Q: Is the diagnosis code No.C1207 also set?
YES : Perform the diagnosis for the diagnosis code No.C1207 (Refer to P.35C-30.).
NO : Go to Step 4.

STEP 4. M.U.T.-III data list
Check the following data list.
- Item No.01: FL wheel speed sensor

Q: Is the check result normal?
YES : Go to Step 8.
NO : Go to Step 5.

STEP 5. Connector check: A-68 ASTC-ECU connector, A-121 front wheel speed sensor (LH) connector

Q: Is the check result normal?
YES : Go to Step 6.
NO : Repair the defective connector. Then go to Step 9.

STEP 6. Resistance measurement at the A-68 ASTC-ECU connector
(1) Disconnect the A-68 ASTC-ECU connector.
(2) Measure the resistance between the A-68 ASTC-ECU connector terminal No.18 and No.19.

OK: Continuity

Q: Is the check result normal?
YES : Go to Step 7.
NO : Repair the wiring harness. Then go to Step 9.

STEP 7. Check for wheel speed sensor as a single unit
Refer to P.35C-76.

Q: Is the check result normal?
YES : Go to Step 8.
NO : Replace the wheel speed sensor (Refer to P.35C-76.). Then go to Step 9.

<Incorrect> <Correct>

Attached sheet 9 (3/4) -(4/4)

STEP 8. Check whether the diagnosis code is reset.
(1) Erase the diagnosis code.
(2) Drive the vehicle at 15 km/h or more.

NOTE: The ABS warning lamp does not turn OFF in some cases unless the vehicle runs at 15 km/h or higher.

Q: Is the diagnosis code No.C1205 set?
YES : Replace the hydraulic unit (integrated with ASTC-ECU) (Refer to P.35C-75.). Then go to Step 9.
NO : Intermittent malfunction (Refer to GROUP 00 – How to Cope with Intermittent Malfunctions.).

STEP 9. Check whether the diagnosis code is reset.
(1) Erase the diagnosis code.
(2) Drive the vehicle at 15 km/h or more.

NOTE: The ABS warning lamp does not turn OFF in some cases unless the vehicle runs at 15 km/h or higher.

Q: Is the diagnosis code No.C1205 set?
YES : Return to Step 1.
NO : This diagnosis is complete.

<Incorrect>

Code No.C1210: Wheel speed sensor (RR) (signal open circuit)

Attached sheet 9 (3/4) -(4/4)

<Correct>

Wheel Speed Sensor Circuit

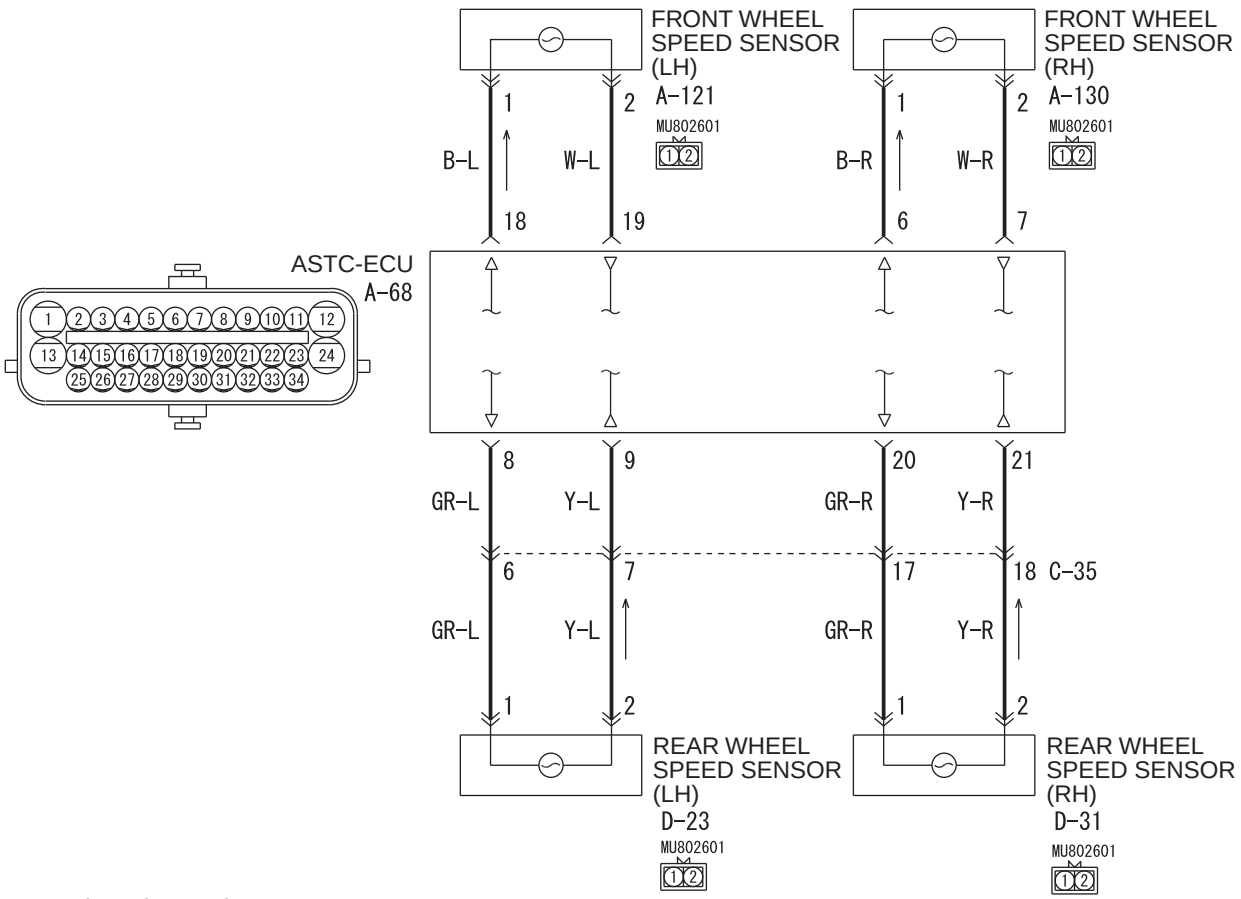

Wire colour code
B : Black LG : Light green G : Green L : Blue W : White Y : Yellow SB : Sky blue
BR : Brown O : Orange GR : Grey R : Red P : Pink V : Violet PU : Purple SI : Silver

ACB01301

DIAGNOSIS PROCEDURE

STEP 1. M.U.T.-III CAN bus diagnosis
Use M.U.T.-III to diagnose the CAN bus lines.

Q: Is the check result normal?
YES : Go to Step 3.
NO : Repair the CAN bus lines (Refer to GROUP 54C – CAN Bus Diagnostics Table). On completion, go to Step 2.

STEP 2. Diagnosis code recheck after resetting CAN bus lines
(1) Drive the vehicle at 20 km/h or more.

NOTE: The ABS warning lamp does not turn OFF in some cases unless the vehicle runs at 20 km/h or higher.
(2) Turn the ignition switch from the ON position to the LOCK (OFF) position.

Q: Is the diagnosis code No.C1200 set?
YES : Go to Step 3.
NO : The procedure is complete.

STEP 3. M.U.T.-III diagnosis code
Check that the diagnosis code No.C1207 are also set.

Q: Is the diagnosis code No.C1207 also set?
YES : Perform the diagnosis for the diagnosis code No.C1207 (Refer to).
NO : Go to Step 4.

STEP 4. M.U.T.-III data list
Check the following data list.
- Item No.01: FL wheel speed sensor

Q: Is the check result normal?
YES : Go to Step 12.
NO : Go to Step 5.

STEP 5. Connector check: A-68 ASTC-ECU connector, A-121 front wheel speed sensor (LH) connector

Q: Is the check result normal?
YES : Go to Step 6.
NO : Repair the defective connector. Then go to Step 13.

STEP 6. Voltage measurement at the A-68 ASTC-ECU connector (Short circuit to power supply)
(1) Disconnect the A-68 ASTC-ECU connector.
(2) Turn the ignition switch to the ON position.
(3) Measure the voltage between the A-68 ASTC-ECU connector terminal No.18 and body earth or between the A-68 ASTC-ECU connector terminal No.19 and body earth.

OK: 1 V or less

Q: Is the check result normal?
YES : Go to Step 7.
NO : Go to Step 8.

STEP 7. Resistance measurement at the A-68 ASTC-ECU connector (Short circuit to earth)
(1) Disconnect the A-68 ASTC-ECU connector.
(2) Measure the resistance between the A-68 ASTC-ECU connector terminal No.18 and body earth

and between the A-68 ASTC-ECU connector terminal No.19 and body earth.

OK: Continuity

Q: Is the check result normal?
YES : Go to Step 9.
NO : Go to Step 8.

STEP 8. Wiring harness check between A-68 ASTC-ECU connector terminal No.18 and A-121 front wheel speed sensor (LH) connector terminal No.1 and between A-68 ASTC-ECU connector terminal No.19 and A-121 front wheel speed sensor (LH) connector terminal No.2

- Check for short circuit in front wheel speed sensor (LH) circuit for short to power supply or earth.

Q: Is the check result normal?
YES : Replace the front wheel speed sensor (LH) (Refer to). Then go to Step 13.
NO : Repair the wiring harness. Then go to Step 13.

STEP 9. Voltage or current measurement at A-121 front wheel speed sensor (LH) connector (Open circuit)

(1) Disconnect the A-121 front wheel speed sensor (LH) connector, and measure at the wiring harness side.
(2) Turn the ignition switch to the ON position.
(3) Measure the voltage between the power supply terminal of A-121 front wheel speed sensor (LH) connector terminal No.1 and the body earth.
(4) Measure the output current at the special tool test harness (MB991709) to connect between the A-121 front wheel speed sensor (LH) connector and the wiring harness connector (Refer to).

OK:
<Voltage> System voltage
<Current> 5 – 9 mA or 11 – 17 mA

Q: Is the check result normal?
YES : Go to Step 11.
NO : Go to Step 10.

STEP 10. Wiring harness check between A-68 ASTC-ECU connector terminal No.18 and A-121 front wheel speed sensor (LH) connector terminal No.1 and between A-68 ASTC-ECU connector terminal No.19 and A-121 front wheel speed sensor (LH) connector terminal No.2

- Check for open circuit in front wheel speed sensor (LH).

Q: Is the check result normal?
YES : Go to Step 11.
NO : Repair the wiring harness. Then go to Step 13.

STEP 11. Check for wheel speed sensor as a single unit

Refer to .

Q: Is the check result normal?
YES : Go to Step 12.
NO : Replace the front wheel speed sensor (LH) (Refer to). Then go to Step 13.

STEP 12. Check whether the diagnosis code is reset.

(1) Erase the diagnosis code.
(2) Drive the vehicle at 20 km/h or more.

NOTE: The ABS warning lamp does not turn OFF in some cases unless the vehicle runs at 20 km/h or higher.

Q: Is the diagnosis code No.C1200 set?
YES : Replace the hydraulic unit (integrated with ASTC-ECU) (Refer to). Then go to Step 13.
NO : Intermittent malfunction (Refer to GROUP 00 – How to Cope with Intermittent Malfunctions).

STEP 13. Check whether the diagnosis code is reset.

(1) Erase the diagnosis code.
(2) Drive the vehicle at 20 km/h or more.

NOTE: The ABS warning lamp does not turn OFF in some cases unless the vehicle runs at 20 km/h or higher.

Q: Is the diagnosis code No.C1200 set?
YES : Return to Step 1.
NO : This diagnosis is complete.

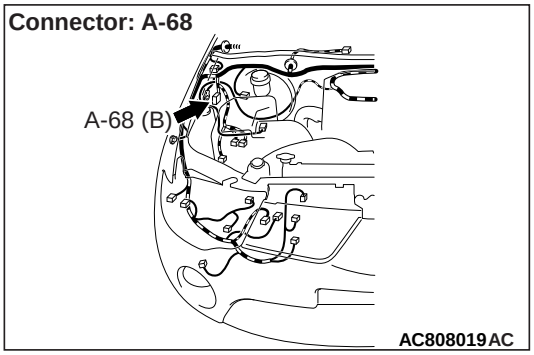

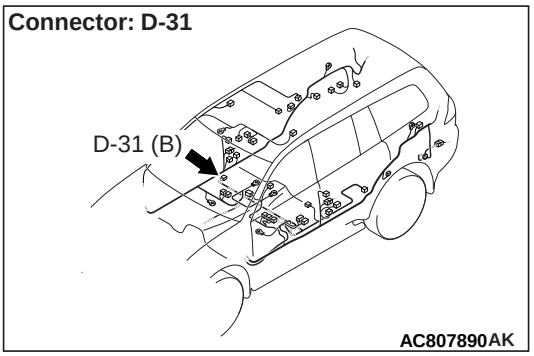

⚠ CAUTION
- **If there is any problem in the CAN bus lines, an incorrect diagnosis code may be set. Prior to this diagnosis, diagnose the CAN bus lines (Refer to GROUP 54C – CAN Bus Diagnostics Table.).**
- **Before replacing the ECU, ensure that the communication circuit is normal.**

OPERATION
- A toothed ABS rotor generates a pulse signal as it moves across the pickup field of each wheel speed sensor.
- The wheel speed sensor transmit the frequency of the pulses to the ASTC-ECU.
- The hydraulic unit assembly (integrated with ASTC-ECU) modulates the amount of braking force individually applied to each wheel cylinder.

DIAGNOSIS CODE SET CONDITION
Diagnosis code No.C1210 is set when signal is not input due to breakage of the wire of the wheel speed sensor without the output of the code No.C1212.

PROBABLE CAUSES
Current trouble
- Damaged wiring harness and connectors
- Wheel speed sensor malfunction
- ASTC-ECU malfunction

<Incorrect>

<Correct> Attached sheet 10 (3/4) -(4/4)

Past trouble
- Carry out diagnosis with particular emphasis on wiring harness and connector failures between ASTC-ECU and the wheel speed sensor. For diagnosis procedures, refer to How to treat past trouble (GROUP 00 – How to Cope with Intermittent Malfunctions.).

DIAGNOSIS PROCEDURE

STEP 1. M.U.T.-III CAN bus diagnosis
Use M.U.T.-III to diagnose the CAN bus lines.

Q: Is the check result normal?
YES : Go to Step 3.
NO : Repair the CAN bus lines (Refer to GROUP 54C – CAN Bus Diagnostics Table.). On completion, go to Step 2.

STEP 2. Diagnosis code recheck after resetting CAN bus lines
(1) Erase the diagnosis code.
(2) Drive the vehicle at 15 km/h or more.

NOTE: The ABS warning lamp does not turn OFF in some cases unless the vehicle runs at 15 km/h or higher.

Q: Is the diagnosis code No.C1210 set?
YES : Go to Step 3.
NO : The procedure is complete.

STEP 3. M.U.T.-III diagnosis code
Check that the diagnosis code No.C1212 are also set.

Q: Is the diagnosis code No.C1212 also set?
YES : Perform the diagnosis for the diagnosis code No.C1212 (Refer to P.35C-32.).
NO : Go to Step 4.

STEP 4. M.U.T.-III data list
Check the following data list.
- Item No.04: RR wheel speed sensor

Q: Is the check result normal?
YES : Go to Step 8.
NO : Go to Step 5.

STEP 5. Connector check: A-68 ASTC-ECU connector, C-35 intermediate connector, D-31 rear wheel speed sensor (RH) connector

Q: Is the check result normal?

YES : Go to Step 6.
NO : Repair the defective connector. Then go to Step 9.

STEP 6. Resistance measurement at the A-68 ASTC-ECU connector
(1) Disconnect the A-68 ASTC-ECU connector.
(2) Measure the resistance between the A-68 ASTC-ECU connector terminal No.20 and No.21.

OK: Continuity

Q: Is the check result normal?
YES : Go to Step 7.
NO : Repair the wiring harness. Then go to Step 9.

STEP 7. Check for wheel speed sensor as a single unit
Refer to P.35C-76.

Q: Is the check result normal?
YES : Go to Step 8.
NO : Replace the wheel speed sensor (Refer to P.35C-76.). Then go to Step 9.

STEP 8. Check whether the diagnosis code is reset.
(1) Erase the diagnosis code.
(2) Drive the vehicle at 15 km/h or more.

NOTE: The ABS warning lamp does not turn OFF in some cases unless the vehicle runs at 15 km/h or higher.

Q: Is the diagnosis code No.C1210 set?
YES : Replace the hydraulic unit (integrated with ASTC-ECU) (Refer to P.35C-75.). Then go to Step 9.
NO : Intermittent malfunction (Refer to GROUP 00 – How to Cope with Intermittent Malfunctions.).

STEP 9. Check whether the diagnosis code is reset.
(1) Erase the diagnosis code.
(2) Drive the vehicle at 15 km/h or more.

NOTE: The ABS warning lamp does not turn OFF in some cases unless the vehicle runs at 15 km/h or higher.

Q: Is the diagnosis code No.C1210 set?
YES : Return to Step 1.
NO : This diagnosis is complete.

<Incorrect>

Attached sheet 10 (3/4) -(4/4)

<Correct>

DIAGNOSIS PROCEDURE

STEP 1. M.U.T.-III CAN bus diagnosis
Use M.U.T.-III to diagnose the CAN bus lines.

Q: Is the check result normal?
YES : Go to Step 3.
NO : Repair the CAN bus lines (Refer to GROUP 54C – CAN Bus Diagnostics Table). On completion, go to Step 2.

STEP 2. Diagnosis code recheck after resetting CAN bus lines
(1) Drive the vehicle at 20 km/h or more.

NOTE: The ABS warning lamp does not turn OFF in some cases unless the vehicle runs at 20 km/h or higher.

(2) Turn the ignition switch from the ON position to the LOCK (OFF) position.

Q: Is the diagnosis code No.C1200 set?
YES : Go to Step 3.
NO : The procedure is complete.

STEP 3. M.U.T.-III diagnosis code
Check that the diagnosis code No.C1212 are also set.

Q: Is the diagnosis code No.C1212 also set?
YES : Perform the diagnosis for the diagnosis code No.C1212 (Refer to .).
NO : Go to Step 4.

STEP 4. M.U.T.-III data list
Check the following data list.
- Item No.04: RR wheel speed sensor

Q: Is the check result normal?
YES : Go to Step 12.
NO : Go to Step 5.

STEP 5. Connector check: A-68 ASTC-ECU connector, C-35 intermediate connector, D-31 rear wheel speed sensor (RH) connector

Q: Is the check result normal?
YES : Go to Step 6.
NO : Repair the defective connector. Then go to Step 13.

STEP 6. Voltage measurement at the A-68 ASTC-ECU connector (Short circuit to power supply)
(1) Disconnect the A-68 ASTC-ECU connector.
(2) Turn the ignition switch to the ON position.
(3) Measure the voltage between the A-68 ASTC-ECU connector terminal No.20 and body earth or between the A-68 ASTC-ECU connector terminal No.21 and body earth.

OK: 1 V or less

Q: Is the check result normal?
YES : Go to Step 7.
NO : Go to Step 8.

STEP 7. Resistance measurement at the A-68 ASTC-ECU connector (Short circuit to earth)
(1) Disconnect the A-68 ASTC-ECU connector.
(2) Measure the resistance between the A-68 ASTC-ECU connector terminal No.20 and body earth and between the A-68 ASTC-ECU connector terminal No.21 and body earth.

OK: Continuity

Q: Is the check result normal?
YES : Go to Step 9.
NO : Go to Step 8.

STEP 8. Wiring harness check between A-68 ASTC-ECU connector terminal No.20 and D-31 rear wheel speed sensor (RH) connector terminal No.1 and between A-68 ASTC-ECU connector terminal No.21 and D-31 rear wheel speed sensor (RH) connector terminal No.2

- Check for short circuit in rear wheel speed sensor (RH) circuit for short to power supply or earth.

Q: Is the check result normal?

YES : Replace the rear wheel speed sensor (RH) (Refer to). Then go to Step 13.

NO : Repair the wiring harness. Then go to Step 13.

STEP 9. Voltage or current measurement at D-31 rear wheel speed sensor (RH) connector (Open circuit)

(1) Disconnect the F-10 rear wheel speed sensor (RH) connector, and measure at the wiring harness side.
(2) Turn the ignition switch to the ON position.
(3) Measure the voltage between the power supply terminal of D-31 rear wheel speed sensor (RH) connector terminal No.1 and the body earth.
(4) Measure the output current at the special tool test harness (MB991709) to connect between the D-31 rear wheel speed sensor (RH) connector and the wiring harness connector (Refer to).

OK:
<Voltage> System voltage
<Current> 5 – 9 mA or 11 – 17 mA

Q: Is the check result normal?

YES : Go to Step 11.

NO : Go to Step 10.

STEP 10. Wiring harness check between A-68 ASTC-ECU connector terminal No.20 and D-31 rear wheel speed sensor (RH) connector terminal No.1 and between A-68 ASTC-ECU connector terminal No.21 and D-31 rear wheel speed sensor (RH) connector terminal No.2

- Check for open circuit in rear wheel speed sensor (RH).

Q: Is the check result normal?

YES : Go to Step 11.

NO : Repair the wiring harness. Then go to Step 13.

STEP 11. Check for wheel speed sensor as a single unit

Refer to .

Q: Is the check result normal?

YES : Go to Step 12.

NO : Replace the rear wheel speed sensor (RH) (Refer to). Then go to Step 13.

STEP 12. Check whether the diagnosis code is reset.

(1) Erase the diagnosis code.
(2) Drive the vehicle at 20 km/h or more.

NOTE: The ABS warning lamp does not turn OFF in some cases unless the vehicle runs at 20 km/h or higher.

Q: Is the diagnosis code No.C1200 set?

YES : Replace the hydraulic unit (integrated with ASTC-ECU) (Refer to). Then go to Step 13.

NO : Intermittent malfunction (Refer to GROUP 00 – How to Cope with Intermittent Malfunctions).

STEP 13. Check whether the diagnosis code is reset.

(1) Erase the diagnosis code.
(2) Drive the vehicle at 20 km/h or more.

NOTE: The ABS warning lamp does not turn OFF in some cases unless the vehicle runs at 20 km/h or higher.

Q: Is the diagnosis code No.C1200 set?

YES : Return to Step 1.

NO : This diagnosis is complete.

⚠ CAUTION
- **If there is any problem in the CAN bus lines, an incorrect diagnosis code may be set. Prior to this diagnosis, diagnose the CAN bus lines (Refer to GROUP 54C – CAN Bus Diagnostics Table.).**
- **Before replacing the ECU, ensure that the communication circuit is normal.**

OPERATION
- A toothed ABS rotor generates a pulse signal as it moves across the pickup field of each wheel speed sensor.
- The wheel speed sensor transmit the frequency of the pulses to the ASTC-ECU.
- The hydraulic unit assembly (integrated with ASTC-ECU) modulates the amount of braking force individually applied to each wheel cylinder.

DIAGNOSIS CODE SET CONDITION
Diagnosis code No.C1215 is set when signal is not input due to breakage of the wire of the wheel speed sensor without the output of the code No.C1217.

PROBABLE CAUSES

Current trouble
- Damaged wiring harness and connectors
- Wheel speed sensor malfunction
- ASTC-ECU malfunction

Past trouble
- Carry out diagnosis with particular emphasis on wiring harness and connector failures between ASTC-ECU and the wheel speed sensor. For diagnosis procedures, refer to How to treat past trouble (GROUP 00 – How to Cope with Intermittent Malfunctions.).

DIAGNOSIS PROCEDURE

STEP 1. M.U.T.-III CAN bus diagnosis
Use M.U.T.-III to diagnose the CAN bus lines.

Q: Is the check result normal?
YES : Go to Step 3.
NO : Repair the CAN bus lines (Refer to GROUP 54C – CAN Bus Diagnostics Table.). On completion, go to Step 2.

STEP 2. Diagnosis code recheck after resetting CAN bus lines
(1) Erase the diagnosis code.
(2) Drive the vehicle at 15 km/h or more.

NOTE: The ABS warning lamp does not turn OFF in some cases unless the vehicle runs at 15 km/h or higher.

Q: Is the diagnosis code No.C1215 set?
YES : Go to Step 3.
NO : The procedure is complete.

STEP 3. M.U.T.-III diagnosis code
Check that the diagnosis code No.C1217 are also set.

Q: Is the diagnosis code No.C1217 also set?
YES : Perform the diagnosis for the diagnosis code No.C1217 (Refer to P.35C-35.).
NO : Go to Step 4.

STEP 4. M.U.T.-III data list
Check the following data list.
- Item No.03: RL wheel speed sensor

Q: Is the check result normal?
YES : Go to Step 8.
NO : Go to Step 5.

STEP 5. Connector check: A-68 ASTC-ECU connector, C-35 intermediate connector, D-23 rear wheel speed sensor (LH) connector

Q: Is the check result normal?
YES : Go to Step 6.
NO : Repair the defective connector. Then go to Step 9.

STEP 6. Resistance measurement at the A-68 ASTC-ECU connector
(1) Disconnect the A-68 ASTC-ECU connector.
(2) Measure the resistance between the ASTC-ECU connector terminal No.8 and No.9.

OK: Continuity

Q: Is the check result normal?
YES : Go to Step 7.
NO : Repair the wiring harness. Then go to Step 9.

STEP 7. Check for wheel speed sensor as a single unit
Refer to P.35C-76.

Q: Is the check result normal?
YES : Go to Step 8.
NO : Replace the wheel speed sensor (Refer to P.35C-76.). Then go to Step 9.

<Incorrect>
<Correct>
Attached sheet 11 (3/4) -(4/4)

Attached sheet 11 (2/4)

STEP 8. Check whether the diagnosis code is reset.
(1) Erase the diagnosis code.
(2) Drive the vehicle at 15 km/h or more.

NOTE: The ABS warning lamp does not turn OFF in some cases unless the vehicle runs at 15 km/h or higher.

Q: Is the diagnosis code No.C1215 set?
YES : Replace the hydraulic unit (integrated with ASTC-ECU) (Refer to P.35C-75.). Then go to Step 9.
NO : Intermittent malfunction (Refer to GROUP 00 – How to Cope with Intermittent Malfunctions.).

STEP 9. Check whether the diagnosis code is reset.
(1) Erase the diagnosis code.
(2) Drive the vehicle at 15 km/h or more.

NOTE: The ABS warning lamp does not turn OFF in some cases unless the vehicle runs at 15 km/h or higher.

Q: Is the diagnosis code No.C1215 set?
YES : Return to Step 1.
NO : This diagnosis is complete.

<Incorrect>

Code No.C1201: Wheel speed sensor (FR) (signal short circuit)

Attached sheet 11 (3/4) -(4/4)

<Correct>

Wheel Speed Sensor Circuit

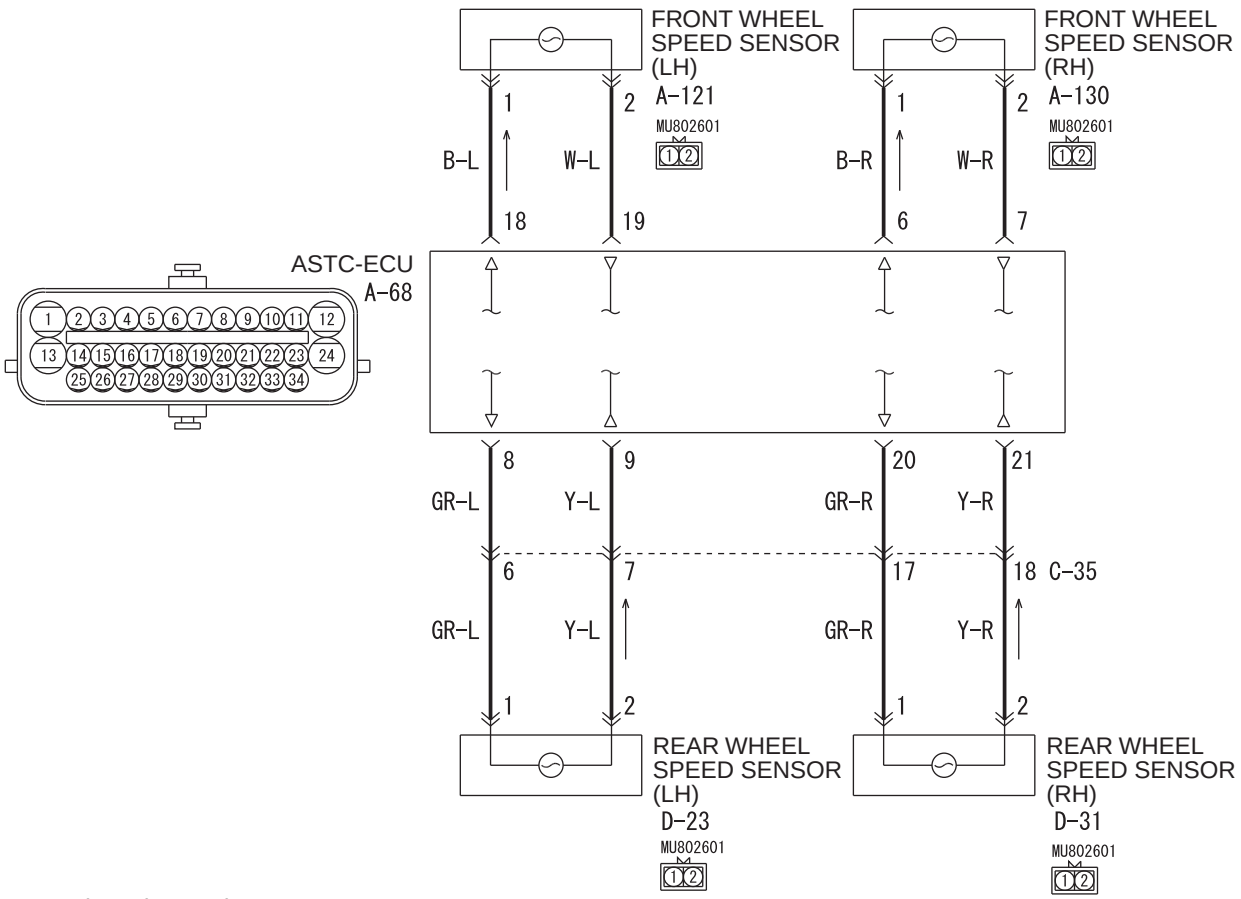

Wire colour code
B : Black LG : Light green G : Green L : Blue W : White Y : Yellow SB : Sky blue
BR : Brown O : Orange GR : Grey R : Red P : Pink V : Violet PU : Purple SI : Silver

ACB01301

DIAGNOSIS PROCEDURE

STEP 1. M.U.T.-III CAN bus diagnosis
Use M.U.T.-III to diagnose the CAN bus lines.

Q: Is the check result normal?
YES : Go to Step 3.
NO : Repair the CAN bus lines (Refer to GROUP 54C – CAN Bus Diagnostics Table). On completion, go to Step 2.

STEP 2. Diagnosis code recheck after resetting CAN bus lines
(1) Drive the vehicle at 20 km/h or more.

NOTE: The ABS warning lamp does not turn OFF in some cases unless the vehicle runs at 20 km/h or higher.
(2) Turn the ignition switch from the ON position to the LOCK (OFF) position.

Q: Is the diagnosis code No.C1200 set?
YES : Go to Step 3.
NO : The procedure is complete.

STEP 3. M.U.T.-III diagnosis code
Check that the diagnosis code No.C1217 are also set.

Q: Is the diagnosis code No.C1217 also set?
YES : Perform the diagnosis for the diagnosis code No.C1217 (Refer to .).
NO : Go to Step 4.

STEP 4. M.U.T.-III data list
Check the following data list.
- Item No.03: RL wheel speed sensor

Q: Is the check result normal?
YES : Go to Step 12.
NO : Go to Step 5.

STEP 5. Connector check: A-68 ASTC-ECU connector, C-35 intermediate connector, D-23 rear wheel speed sensor (LH) connector

Q: Is the check result normal?
YES : Go to Step 6.
NO : Repair the defective connector. Then go to Step 13.

STEP 6. Voltage measurement at the A-68 ASTC-ECU connector (Short circuit to power supply)
(1) Disconnect the A-68 ASTC-ECU connector.
(2) Turn the ignition switch to the ON position.
(3) Measure the voltage between the A-68 ASTC-ECU connector terminal No.8 and body earth or between the A-68 ASTC-ECU connector terminal No.9 and body earth.

OK: 1 V or less

Q: Is the check result normal?
YES : Go to Step 7.
NO : Go to Step 8.

STEP 7. Resistance measurement at the A-68 ASTC-ECU connector (Short circuit to earth)
(1) Disconnect the A-68 ASTC-ECU connector.
(2) Measure the resistance between the A-68 ASTC-ECU connector terminal No.8 and body earth and

between the A-68 ASTC-ECU connector terminal No.9 and body earth.

OK: Continuity

Q: Is the check result normal?
YES : Go to Step 9.
NO : Go to Step 8.

STEP 8. Wiring harness check between A-68 ASTC-ECU connector terminal No.8 and D-23 rear wheel speed sensor (LH) connector terminal No.1 and between A-68 ASTC-ECU connector terminal No.9 and D-23 rear wheel speed sensor (LH) connector terminal No.2

- Check for short circuit in rear wheel speed sensor (LH) circuit for short to power supply or earth.

Q: Is the check result normal?
YES : Replace the rear wheel speed sensor (LH) (Refer to). Then go to Step 13.
NO : Repair the wiring harness. Then go to Step 13.

STEP 9. Voltage or current measurement at D-23 rear wheel speed sensor (LH) connector (Open circuit)

(1) Disconnect the D-23 rear wheel speed sensor (LH) connector, and measure at the wiring harness side.
(2) Turn the ignition switch to the ON position.
(3) Measure the voltage between the power supply terminal of D-23 rear wheel speed sensor (LH) connector terminal No.1 and the body earth.
(4) Measure the output current at the special tool test harness (MB991709) to connect between the D-23 rear wheel speed sensor (LH) connector and the wiring harness connector (Refer to).

OK:
<Voltage> System voltage
<Current> 5 – 9 mA or 11 – 17 mA

Q: Is the check result normal?
YES : Go to Step 11.
NO : Go to Step 10.

STEP 10. Wiring harness check between A-68 ASTC-ECU connector terminal No.8 and D-23 rear wheel speed sensor (LH) connector terminal No.1 and between A-68 ASTC-ECU connector terminal No.9 and D-23 rear wheel speed sensor (LH) connector terminal No.2

- Check for open circuit in rear wheel speed sensor (LH).

Q: Is the check result normal?
YES : Go to Step 11.
NO : Repair the wiring harness. Then go to Step 13.

STEP 11. Check for wheel speed sensor as a single unit

Refer to .

Q: Is the check result normal?
YES : Go to Step 12.
NO : Replace the rear wheel speed sensor (LH) (Refer to). Then go to Step 13.

STEP 12. Check whether the diagnosis code is reset.

(1) Erase the diagnosis code.
(2) Drive the vehicle at 20 km/h or more.

NOTE: The ABS warning lamp does not turn OFF in some cases unless the vehicle runs at 20 km/h or higher.

Q: Is the diagnosis code No.C1200 set?
YES : Replace the hydraulic unit (integrated with ASTC-ECU) (Refer to). Then go to Step 13.
NO : Intermittent malfunction (Refer to GROUP 00 – How to Cope with Intermittent Malfunctions).

STEP 13. Check whether the diagnosis code is reset.

(1) Erase the diagnosis code.
(2) Drive the vehicle at 20 km/h or more.

NOTE: The ABS warning lamp does not turn OFF in some cases unless the vehicle runs at 20 km/h or higher.

Q: Is the diagnosis code No.C1200 set?
YES : Return to Step 1.
NO : This diagnosis is complete.