SERVICE BULLETIN

MITSUBISHI MOTORS

GLOBAL AFTER SALES OFFICE, MITSUBISHI MOTORS CORPORATION

PURPOSE : CHANGE	ISSUE NO. : MSB-16EXL54-001	DATE : 2016-02-10
SUBJECT : Changes of the diagnosis procedure due to the changes of the oil pump actuator test in M.U.T-III		<DESTINATION/MODEL> (As per attached sheet 1) <M/Y> 14-16
GROUP : Gr:54(Chassis electrical)		OUTLANDER PHEV(GG0W)

1. Description :

Please refer to the attached document for the information about the change of mention in the applicable service manual.

2. Affected service manuals :

Please refer to the attached document (Attached sheet 1)

3. About the details :

Please refer to the attached document (Attached sheets 9-17)

Attached sheet 1

For overseas market
EU/G.EXP/BRAZIL

Applicable manual	Pub. No.	Applicable title (Info-ID)	Contents
2014 OUTLANDER/ OUTLANDER PHEV Workshop Manual	EU/G.EXP CGFE14E2-CD (English) CGFF14E2-CD (French) CGFG14E2-CD (German) CGFS14E2-CD (Spanish) CGFI14E2-CD (Italian) BRAZIL:DRAFT	INSPECTION PROCEDURE 18: EV system over heat (Oil cooling system) (M549-27-180-01901-01)	Attached sheet 9 (1/13),(12/13)
		ACTUATOR TEST REFERENCE TABLE (M549-20-090-03801-01)	Attached sheet 10
		Code No. P105C: Oil pump circuit, short to earth (M549-31-480-01900-01)	Attached sheet 11
		Code No. P105B: Oil pump fails (M549-31-470-01200-01)	Attached sheet 9 (2/13),(12/13)
		Code No. P10AF: Abnormal oil pump voltage/overheat (M549-31-840-01300-01)	Attached sheet 12
		Code No. P10AD: Oil pump drive circuit fails (M549-31-820-01900-01)	Attached sheet 13
		Code No. P10AE: Oil pump circuit, open circuit (M549-31-830-01600-01)	Attached sheet 14
		SERVICE DATA REFERENCE TABLE (M549-30-080-07201-01)	Attached sheet 15
		ACTUATOR TEST TABLE (M549-30-090-03500-01)	Attached sheet 16
		Check at FEMCU, generator control unit, and REMCU terminals (M549-30-100-08000-01)	Attached sheet 17
2014.5 OUTLANDER/ OUTLANDER PHEV Workshop Manual	EU/G.EXP CGFE14E3-CD (English) CGFF14E3-CD (French) CGFG14E3-CD (German) CGFS14E3-CD (Spanish) CGFI14E3-CD (Italian) BRAZIL:DRAFT	INSPECTION PROCEDURE 18: EV system over heat (Oil cooling system) (M549-27-180-01902-01)	Attached sheet 9 (1/13),(12/13)
		ACTUATOR TEST REFERENCE TABLE (M549-20-090-03801-01)	Attached sheet 10
		Code No. P105C: Oil pump circuit, short to earth (M549-31-480-04201-01)	Attached sheet 9 (3/13),(12/13),(13/13)
		Code No. P105B: Oil pump fails (M549-31-470-04501-01)	Attached sheet 9 (4/13),(12/13),(13/13)
		Code No. P10AF: Abnormal oil pump voltage/overheat (M549-31-840-01301-01)	Attached sheet 9 (5/13),(13/13)
		Code No. P10AD: Oil pump drive circuit fails (M549-31-820-01901-01)	Attached sheet 9 (6/13),(13/13)
		Code No. P10AE: Oil pump circuit, open circuit (M549-31-830-01602-01)	Attached sheet 9 (7/13),(13/13)
		SERVICE DATA REFERENCE TABLE (M549-30-080-07201-01)	Attached sheet 15
		ACTUATOR TEST TABLE (M549-30-090-03501-01)	Attached sheet 16
		Check at FEMCU, generator control unit, and REMCU terminals (M549-30-100-08000-01)	Attached sheet 17

Applicable manual	Pub. No.	Applicable title (Info-ID)	Contents
2016 OUTLANDER/ OUTLANDER PHEV Workshop Manual	EU/G.EXP CGFE16E1-CD (English) CGFF16E1-CD (French) CGFG16E1-CD (German) CGFS16E1-CD (Spanish) CGFI16E1-CD (Italian) BRAZIL:DRAFT	INSPECTION PROCEDURE 18: EV system over heat (Oil cooling system) (M549-27-180-01902-01)	Attached sheet 9 (1/13),(12/13)
		ACTUATOR TEST REFERENCE TABLE (M549-20-090-10200-01)	Attached sheet 10
		Code No. P105C: Oil pump circuit, short to earth (M549-31-480-04201-01)	Attached sheet 9 (8/13),(12/13),(13/13)
		Code No. P105B: Oil pump fails (M549-31-470-04501-01)	Attached sheet 9 (9/13),(12/13),(13/13)
		Code No. P10AE: Oil pump circuit, open circuit (M549-31-830-01602-01)	Attached sheet 9 (10/13),(13/13)
		SERVICE DATA REFERENCE TABLE (M549-30-080-07201-01)	Attached sheet 15
		ACTUATOR TEST TABLE (M549-30-090-03501-01)	Attached sheet 16
		Check at FEMCU, generator control unit, and REMCU terminals (M549-30-100-08000-01)	Attached sheet 17

AUSTRALIA /NEW ZEALAND

Applicable manual	Pub. No.	Applicable title (Info-ID)	Contents
2014 OUTLANDER PHEV Workshop Manual	AU900408 (MMAL), DRAFT (NZ)	INSPECTION PROCEDURE 16: EV system over heat (Oil cooling system) (M549-27-180-02000-01)	Attached sheet 9 (1/13),(12/13)
		ACTUATOR TEST REFERENCE TABLE (M549-20-090-04901-01)	Attached sheet 10
		Code No. P105C: Oil pump circuit, short to earth (M549-31-480-05300-01)	Attached sheet 9 (3/13),(12/13),(13/13)
		Code No. P105B: Oil pump fails (M549-31-470-05600-01)	Attached sheet 9 (4/13),(12/13),(13/13)
		SERVICE DATA REFERENCE TABLE (M549-30-080-08300-01)	Attached sheet 15
		ACTUATOR TEST TABLE (M549-30-090-04600-01)	Attached sheet 16
		Check at FEMCU, generator control unit, and REMCU terminals (M549-30-100-09100-01)	Attached sheet 17
2016 OUTLANDER PHEV Workshop Manual	AU900504 (MMAL), DRAFT (NZ)	INSPECTION PROCEDURE 17: EV system over heat (Oil cooling system) (M549-27-180-04200-01)	Attached sheet 9 (11/13),(12/13)
		ACTUATOR TEST REFERENCE TABLE (M549-20-090-10200-01)	Attached sheet 10
		Code No. P105C: Oil pump circuit, short to earth (M549-31-480-04201-01)	Attached sheet 9 (8/13),(12/13),(13/13)
		Code No. P105B: Oil pump fails (M549-31-470-04501-01)	Attached sheet 9 (9/13),(12/13),(13/13)
		Code No. P10AE: Oil pump circuit, open circuit (M549-31-830-01602-01)	Attached sheet 9 (10/13),(13/13)
		SERVICE DATA REFERENCE TABLE (M549-30-080-10200-01)	Attached sheet 15
		ACTUATOR TEST TABLE (M549-30-090-03501-01)	Attached sheet 16
		Check at FEMCU, generator control unit, and REMCU terminals (M549-30-100-08000-01)	Attached sheet 17

STEP 8. EV oil hose and EV oil pipe check
Check that the component is not clogged or damaged.

Q: Is the check result normal?

YES : Go to Step 9.
NO : Repair or replace a clogged or damaged component. Then go to Step 11.

STEP 9. EV oil cooler bypass valve check
Refer to GROUP 14B – Inspection.

Q: Is the check result normal?

YES : Go to Step 10.
NO : Replace the EV oil cooler bypass valve (Refer to GROUP 14B – Electric oil pump/EV oil cooler bypass valve/Chamber). Then go to Step 11.

STEP 10. M.U.T.-III actuator test (GCU). <Old>

~~**Actuator test**~~
~~• Execute the following actuator tests:~~
~~**Item 1. Oil pump**~~
~~**OK: The actuator test is executed and the oil pump runs.**~~

<New>
Insert the attached sheet 9 (12/13)

Q: Is the check result normal?

YES : Replace the EV oil cooler (Refer to GROUP 14B – EV Oil Cooler). Then go to Step 11.
NO : Replace the electric oil pump (Refer to GROUP 14B – Electric oil pump/EV oil cooler bypass valve/Chamber). Then go to Step 11.

STEP 11. Retest the system.

Q: Is the check result normal?

YES : The procedure is complete.
NO : Return to Step 1.

STEP 9. Oil line check

Q: Is the check result normal?
YES : Go to Step 10.
NO : Repair the oil line. Then go to Step 12.

STEP 10. Actuator test <Old>

~~Execute the actuator test below:~~
~~• Item No.1: Oil pump~~

Q: Is the check result normal?
YES : Go to Step 12.
NO : Go to Step 11.

<New>
Insert the attached sheet 9 (12/13)

STEP 11. Check whether the diagnosis code is stored again.
Check whether the generator control unit stores a diagnosis code again.
(1) Erase the stored diagnosis code.
(2) Power supply mode of electric motor switch: OFF
(3) Power supply mode of electric motor switch: ON
(4) Drive the vehicle.
(5) Check if the diagnosis code is stored.

Q: Is diagnosis code stored?
YES : Replace the oil pump. (Refer to GROUP 14B – Electric oil pump, EV oil cooler bypass valve, EV motor/generator oil chamber.) Then go to Step 12.
NO : Intermittent malfunction (Refer to GROUP 00 – How to Use Troubleshooting/How to Cope with Intermittent Malfunctions).

STEP 12. Check whether the diagnosis code is stored again.
Check whether the generator control unit stores a diagnosis code again.
(1) Erase the stored diagnosis code.
(2) Power supply mode of electric motor switch: OFF
(3) Power supply mode of electric motor switch: ON
(4) Drive the vehicle.
(5) Check if the diagnosis code is stored.

Q: Is diagnosis code stored?
YES : Return to Step 1.
NO : This diagnosis is complete.

STEP 8. Measure the voltage at the oil pump connector.

(1) Disconnect the connector, and measure at the wiring harness side.
(2) Operate the electric motor switch without depressing the brake pedal and turn ON the power supply mode of electric motor switch. (READY indicator does not illuminate)
(3) Measure the voltage between the OPCP terminal and body earth.

OK: Approximately 2 – 6 V

Q: Is the check result normal?
YES : Go to Step 10.
NO : Go to Step 9.

STEP 9. Check the OPCP circuit wires between the oil pump and the power drive unit for short to earth or open circuit.

Q: Is the check result normal?
YES : Go to Step 10.
NO : Repair the harness. Then go to Step 17.

STEP 10. Check the wire between the oil pump connector and body earth for open circuit.

Q: Is the check result normal?
YES : Go to Step 11.
NO : Repair the harness. Then go to Step 17.

STEP 11. M.U.T.-III data list

(1) Operate the electric motor switch without depressing the brake pedal and turn ON the power supply mode of electric motor switch. (READY indicator does not illuminate)
(2) Check that the following data list display contents are normal.

<Old>

Data list

- Item No.31: Oil pump output

  OK: Approximately 5 – 90%

- Item No.32: Oil pump operating condition

  OK: Approximately 15 – 65%

Q: Is the check result normal?
YES : Go to Step 12.
NO Item No.31: Abnormal oil pump output : Go to Step 15.
NO Item No.32: Abnormal oil pump operation : Go to Step 14.

Insert the attached sheet 9 (13/13)
<New>

STEP 12. Inspection using an oscilloscope

(1) Operate the electric motor switch without depressing the brake pedal and turn ON the power supply mode of electric motor switch. (READY indicator does not illuminate)
(2) Check whether the OPCP and OPMP terminals are in good condition.

OK: The values on data list item Nos. 31 and 32, which are read out in Step 11, should conform to the values on an oscilloscope (ON time ratio). Refer to "Inspection procedure by using an oscilloscope".

Q: Is the check result normal?
YES : Go to Step 13.
NO OPCP terminal : Go to Step 14.
NO OPMP terminal : Go to Step 15.

STEP 13. Actuator test <Old>

Execute the actuator test below:

- Item No.1: Oil pump

Q: Is the check result normal?
YES : Go to Step 17.
NO : Go to Step 14.

<New>
Insert the attached sheet 9 (12/13)

STEP 14. Check whether the diagnosis code is set again.

Check whether the generator control unit sets a diagnosis code again.
(1) Erase the set diagnosis code.
(2) Power supply mode of electric motor switch: OFF
(3) Power supply mode of electric motor switch: ON
(4) Drive the vehicle.
(5) Check if the diagnosis code is set.

Q: Is diagnosis code set?
YES : Replace the oil pump (Refer to GROUP 14B – Electric oil pump/EV oil cooler bypass valve/Chamber). Then go to Step 15.
NO : This diagnosis is complete.

STEP 15. Check whether the diagnosis code is set again.

Check whether the generator control unit sets a

<New>
Insert the attached sheet 9 (13/13)

STEP 8. M.U.T.-III data list

(1) Operate the electric motor switch without depressing the brake pedal and turn ON the power supply mode of electric motor switch. (READY indicator does not illuminate)

(2) Check that the following data list display contents are normal.

<Old>

~~**Data list**~~

- ~~Item No.31: Oil pump output~~

  ~~**OK: Approximately 5 – 90%**~~

- ~~Item No.32: Oil pump operating condition~~

  ~~**OK: Approximately 15 – 65%**~~

Q: Is the check result normal?

YES : Go to Step 9.

NO Item No.31: Abnormal oil pump output : Go to Step 13.

NO Item No.32: Abnormal oil pump operation : Go to Step 12.

STEP 9. Inspection using an oscilloscope

(1) Operate the electric motor switch without depressing the brake pedal and turn ON the power supply mode of electric motor switch. (READY indicator does not illuminate)

(2) Check whether the OPCP and OPMP terminals are in good condition.

OK: The values on data list item Nos. 31 and 32, which are read out in Step 11, should conform to the values on an oscilloscope (ON time ratio). Refer to "Inspection procedure by using an oscilloscope".

Q: Is the check result normal?

YES : Go to Step 10.

NO OPCP terminal : Go to Step 12.

NO OPMP terminal : Go to Step 13.

STEP 10. Oil line check

Q: Is the check result normal?

YES : Go to Step 11.

NO : Repair the oil line. Then go to Step 14.

STEP 11. Actuator test

<Old>

~~Execute the actuator test below:~~

- ~~Item No.1: Oil pump~~

Q: Is the check result normal?

YES : Go to Step 14.

NO : Go to Step 12.

<New>

Insert the attached sheet 9 (12/13)

STEP 12. Check whether the diagnosis code is set again.

Check whether the generator control unit sets a diagnosis code again.

(1) Erase the set diagnosis code.

(2) Power supply mode of electric motor switch: OFF

(3) Power supply mode of electric motor switch: ON

(4) Drive the vehicle.

(5) Check if the diagnosis code is set.

Q: Is diagnosis code set?

YES : Replace the oil pump. (Refer to GROUP 14B – Electric oil pump, EV oil cooler bypass valve, EV motor/generator oil chamber.) Then go to Step 13.

NO : Intermittent malfunction (Refer to GROUP 00 – How to Use Troubleshooting/How to Cope with Intermittent Malfunctions).

STEP 13 Check whether the diagnosis code is set again.

Check whether the generator control unit sets a diagnosis code again.

(1) Erase the set diagnosis code.

(2) Power supply mode of electric motor switch: OFF

(3) Power supply mode of electric motor switch: ON

(4) Drive the vehicle.

(5) Check if the diagnosis code is set.

Q: Is diagnosis code set?

YES : Replace the power drive unit. Then go to Step 14.

NO : Intermittent malfunction (Refer to GROUP 00 – How to Use Troubleshooting/How to Cope with Intermittent Malfunctions).

STEP 14. Check whether the diagnosis code is set again.

Check whether the generator control unit sets a diagnosis code again.

(1) Erase the set diagnosis code.

(2) Power supply mode of electric motor switch: OFF

(3) Power supply mode of electric motor switch: ON

(4) Drive the vehicle.

(5) Check if the diagnosis code is set.

Q: Is diagnosis code set?

YES : Return to Step 1.

NO : This diagnosis is complete.

STEP 8. Measure the voltage at the oil pump connector.

(1) Disconnect the connector, and measure at the wiring harness side.
(2) Operate the electric motor switch without depressing the brake pedal and turn ON the power supply mode of electric motor switch. (READY indicator does not illuminate)
(3) Measure the voltage between the OPCP terminal and body earth.

OK: System voltage

Q: Is the check result normal?
YES : Go to Step 10.
NO : Go to Step 9.

STEP 9. Check the OPCP circuit wires between the oil pump and the power drive unit for short to earth or open circuit.

Q: Is the check result normal?
YES : Go to Step 10.
NO : Repair the harness. Then go to Step 15.

STEP 10. M.U.T.-III data list

(1) Operate the electric motor switch without depressing the brake pedal and turn ON the power supply mode of electric motor switch. (READY indicator does not illuminate)
(2) Check that the following data list display contents are normal.

<Old>

Data list

- Item No.31: Oil pump output

  OK: Approximately 5 – 90%

- Item No.32: Oil pump operating condition

  OK: Approximately 15 – 65%

Q: Is the check result normal?
YES : Go to Step 11.
NO OPCP waveform fails : Go to Step 12.
NO OPMP waveform fails : Go to Step 13.

STEP 11. Inspection using an oscilloscope

(1) Operate the electric motor switch without depressing the brake pedal and turn ON the power supply mode of electric motor switch. (READY indicator does not illuminate)
(2) Check whether the OPCP and OPMP terminals are in good condition.

OK: The values on data list item Nos. 31 and 32, which are read out in Step 10, should conform to the values on an oscilloscope (ON time ratio). Refer to "Inspection procedure by using an oscilloscope".

Q: Is the check result normal?
YES : Go to Step 14.
NO OPCP terminal : Go to Step 12.
NO OPMP terminal : Go to Step 13.

Insert the attached sheet 9 (13/13)

<New>

STEP 12. Check whether the diagnosis code is set again.

Check whether the generator control unit sets a diagnosis code again.
(1) Erase the set diagnosis code.
(2) Power supply mode of electric motor switch: OFF
(3) Power supply mode of electric motor switch: ON
(4) Drive the vehicle.
(5) Check if the diagnosis code is set.

Q: Is diagnosis code set?
YES : Replace the electric oil pump. (Refer to GROUP 14B – EV Cooling System.) Then go to Step 14.
NO : This diagnosis is complete.

STEP 13. Check whether the diagnosis code is set again.

Check whether the generator control unit set a diagnosis code again.
(1) Erase the set diagnosis code.
(2) Power supply mode of electric motor switch: OFF
(3) Power supply mode of electric motor switch: ON
(4) Drive the vehicle.
(5) Check if the diagnosis code is set.

Q: Is diagnosis code set?

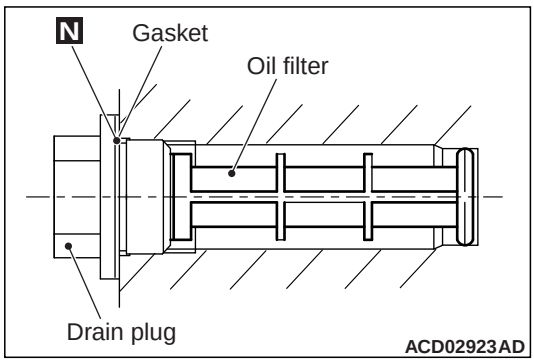

YES : When you remove the generator drain plug, check that the oil filter behind it is not clogged or damaged. If necessary, clean or replace the oil filter. (Refer to GROUP 14B – On-vehicle Service.) Then go to Step 14.
NO : This diagnosis is complete.

Attached sheet 9 (6/13)

Code No. P10AD: Oil pump drive circuit fails

PROBABLE CAUSES
- Malfunction of the harness, connector
- Noise interruption in signal wires
- Malfunction of the oil pump
- Malfunction of the generator control unit

DIAGNOSIS PROCEDURE

STEP 1. M.U.T.-III CAN bus diagnosis

Q: Is the check result normal?
YES : Go to Step 2.
NO : Repair the CAN bus line.

STEP 2. Measure the voltage at the oil pump connector.
(1) Disconnect the connector, and measure at the wiring harness side.
(2) Operate the electric motor switch without depressing the brake pedal and turn ON the power supply mode of electric motor switch. (READY indicator does not illuminate)
(3) Measure the voltage between the power supply terminal and body earth.

OK: System battery

Q: Is the check result normal?
YES : Go to Step 3.
NO : Check the power supply circuit and repair if necessary. Then go to Step 9.

STEP 3. Measure the voltage at the oil pump connector.
(1) Disconnect the connector, and measure at the wiring harness side.
(2) Operate the electric motor switch without depressing the brake pedal and turn ON the power supply mode of electric motor switch. (READY indicator does not illuminate)
(3) Measure the voltage between the OPMP terminal and body earth.

OK: 0 V

Q: Is the check result normal?
YES : Go to Step 5.
NO : Go to Step 4.

STEP 4. Check the OPMP circuit wires between the oil pump and the power drive unit for short to earth or open circuit.

Q: Is the check result normal?
YES : Go to Step 7.
NO : Repair the harness. Then go to Step 9.

STEP 5. M.U.T.-III data list
(1) Operate the electric motor switch without depressing the brake pedal and turn ON the power supply mode of electric motor switch. (READY indicator does not illuminate)
(2) Check that the following data list display contents are normal.

<Old>

Data list
- Item No.31: Oil pump output
  OK: Approximately 5 – 90%
- Item No.32: Oil pump operating condition
  OK: Approximately 15 – 65%

Q: Is the check result normal?
YES : Go to Step 6.
NO Item No.31: Abnormal oil pump output : Go to Step 7.
NO Item No.32: Abnormal oil pump operation : Go to Step 8.

STEP 6. Inspection using an oscilloscope
(1) Operate the electric motor switch without depressing the brake pedal and turn ON the power supply mode of electric motor switch. (READY indicator does not illuminate)
(2) Check whether the OPCP and OPMP terminals are in good condition.

OK: The values on data list item Nos. 31 and 32, which are read out in Step 10, should conform to the values on an oscilloscope (ON time ratio). Refer to "Inspection procedure by using an oscilloscope".

Q: Is the check result normal?
YES : Go to Step 9.
NO OPCP terminal : Go to Step 7.
NO OPMP terminal : Go to Step 8.

STEP 7. Check whether the diagnosis code is set again.
Check whether the generator control unit sets a

<New> Insert the attached sheet 9 (13/13)

Code No. P10AE: Oil pump circuit, open circuit

PROBABLE CAUSES
- Damaged harness wires and connectors
- Noise interruption in signal wires
- Malfunction of the oil pump
- Malfunction of the generator control unit

DIAGNOSIS PROCEDURE

STEP 1. M.U.T.-III CAN bus diagnosis

Q: Is the check result normal?
YES : Go to Step 2.
NO : Repair the CAN bus line.

STEP 2. Use M.U.T.-III to confirm a diagnosis code of other systems.
Check whether the PHEV-ECU sets a power supply-related diagnosis code(s).

Q: Is the check result normal?
YES : Go to Step 3.
NO : Diagnose the system according to the set diagnosis code.

STEP 3. Check the OPCP circuit wires between the oil pump and the power drive unit for short to earth or open circuit.

Q: Is the check result normal?
YES : Go to Step 4.
NO : Repair the harness. Then go to Step 12.

STEP 4. Measure the voltage at the oil pump connector.
(1) Disconnect the connector, and measure at the wiring harness side.
(2) Operate the electric motor switch without depressing the brake pedal and turn ON the power supply mode of electric motor switch. (READY indicator does not illuminate)
(3) Measure the voltage between the OPCP terminal and body earth.

OK: Battery voltage

Q: Is the check result normal?
YES : Go to Step 6.
NO : Go to Step 5.

STEP 5. Check the OPMP circuit wires between the oil pump and the power drive unit for short to earth or open circuit.

Q: Is the check result normal?
YES : Go to Step 6.
NO : Repair the harness. Then go to Step 12.

STEP 6. Check the wire between the oil pump connector and body earth for open circuit.

Q: Is the check result normal?
YES : Go to Step 7.
NO : Repair the harness. Then go to Step 12.

STEP 7. Check the OPCP circuit wires between the oil pump and the power drive unit for short to earth or open circuit.

Q: Is the check result normal?
YES : Go to Step 8.
NO : Repair the harness. Then go to Step 12.

STEP 8. M.U.T.-III data list
(1) Operate the electric motor switch without depressing the brake pedal and turn ON the power supply mode of electric motor switch. (READY indicator does not illuminate)
(2) Check that the following data list display contents are normal.

<Old>

Data list
- Item No.31: Oil pump output
  OK: Approximately 5 – 90%
- Item No.32: Oil pump operating condition
  OK: Approximately 15 – 65%

Q: Is the check result normal?
YES : Go to Step 9.
NO Item No.31: Abnormal oil pump output : Go to Step 10.
NO Item No.32: Abnormal oil pump operation : Go to Step 11.

STEP 9. Inspection using an oscilloscope
(1) Operate the electric motor switch without depressing the brake pedal and turn ON the power supply mode of electric motor switch. (READY indicator does not illuminate)
(2) Check whether the OPCP and OPMP terminals are in good condition.

OK: The values on data list item Nos. 31 and 32, which are read out in Step 9, should conform to the values on an oscilloscope (ON time ratio). Refer to "Inspection procedure by using an

<New> Insert the attached sheet 9 (13/13)

STEP 8. Measure the voltage at the oil pump connector.

(1) Disconnect the connector, and measure at the wiring harness side.
(2) Operate the electric motor switch without depressing the brake pedal and turn ON the power supply mode of electric motor switch. (READY indicator does not illuminate)
(3) Measure the voltage between the OPCP terminal and body earth.

OK: Approximately 2 – 6 V

Q: Is the check result normal?
YES : Go to Step 10.
NO : Go to Step 9.

STEP 9. Check the OPCP circuit wires between the oil pump and the power drive unit for short to earth or open circuit.

Q: Is the check result normal?
YES : Go to Step 10.
NO : Repair the harness. Then go to Step 17.

STEP 10. Check the wire between the oil pump connector and body earth for open circuit.

Q: Is the check result normal?
YES : Go to Step 11.
NO : Repair the harness. Then go to Step 17.

STEP 11. M.U.T.-III data list <GCU>

(1) Operate the electric motor switch without depressing the brake pedal and turn ON the power supply mode of electric motor switch. (READY indicator does not illuminate)
(2) Check that the following data list display contents are normal.

<Old>
- Item No.31: Oil pump output
  OK: Approximately 5 – 90%
- Item No.32: Oil pump operating condition
  OK: Approximately 15 – 65%

Q: Is the check result normal?
YES : Go to Step 12.
NO <Item No.31>: Abnormal oil pump output : Go to Step 15.
NO <Item No.32>: Abnormal oil pump operation : Go to Step 14.

Insert the attached sheet 9 (13/13)
<New>

STEP 12. Inspection using an oscilloscope

(1) Operate the electric motor switch without depressing the brake pedal and turn ON the power supply mode of electric motor switch. (READY indicator does not illuminate)
(2) Check whether the OPCP and OPMP terminals are in good condition.

OK: The values on data list item Nos. 31 and 32, which are read out in Step 11, should conform to the values on an oscilloscope (ON time ratio). Refer to "Inspection procedure by using an oscilloscope".

Q: Is the check result normal?
YES : Go to Step 13.
NO <OPCP terminal> : Go to Step 14.
NO <OPMP terminal> : Go to Step 15.

STEP 13. Actuator test <GCU> <Old>

Execute the actuator test below:
- Item No.1: Oil pump

Q: Is the check result normal?
YES : Go to Step 17.
NO : Go to Step 14.

<New>
Insert the attached sheet 9 (12/13)

STEP 14. Check whether the diagnosis code is set again.

Check whether the generator control unit sets a diagnosis code again.
(1) Erase the set diagnosis code.
(2) Power supply mode of electric motor switch: OFF
(3) Power supply mode of electric motor switch: ON
(4) Drive the vehicle.
(5) Check if the diagnosis code is set.

Q: Is diagnosis code set?
YES : Replace the oil pump (Refer to GROUP 14B – Electric Oil Pump/EV Oil Cooler Bypass Valve/Chamber). Then go to Step 15.
NO : This diagnosis is complete.

STEP 15. Check whether the diagnosis code is set again.

Check whether the generator control unit (GCU) sets

<New>
Insert the attached sheet 9 (13/13)

STEP 7. Check the wire between the oil pump connector and body earth for open circuit.

Q: Is the check result normal?
YES : Go to Step 8.
NO : Repair the harness. Then go to Step 14.

STEP 8. M.U.T.-III data list <GCU>

(1) Operate the electric motor switch without depressing the brake pedal and turn ON the power supply mode of electric motor switch. (READY indicator does not illuminate)
(2) Check that the following data list display contents are normal.

<Old>
- Item No.31: Oil pump output
  OK: Approximately 5 – 90%
- Item No.32: Oil pump operating condition
  OK: Approximately 15 – 65%

Q: Is the check result normal?
YES : Go to Step 9.
NO <Item No.31>: Abnormal oil pump output : Go to Step 13.
NO <Item No.32>: Abnormal oil pump operation : Go to Step 12.

STEP 9. Inspection using an oscilloscope

(1) Operate the electric motor switch without depressing the brake pedal and turn ON the power supply mode of electric motor switch. (READY indicator does not illuminate)
(2) Check whether the OPCP and OPMP terminals are in good condition.

OK: The values on data list item Nos. 31 and 32, which are read out in Step 11, should conform to the values on an oscilloscope (ON time ratio). Refer to "Inspection procedure by using an oscilloscope".

Q: Is the check result normal?
YES : Go to Step 10.
NO <OPCP terminal> : Go to Step 12.
NO <OPMP terminal> : Go to Step 13.

STEP 10. Oil line check

Q: Is the check result normal?
YES : Go to Step 11.
NO : Repair the oil line. Then go to Step 14.

STEP 11. Actuator test <GCU>

<Old>
Execute the actuator test below:
- Item No.1: Oil pump

Q: Is the check result normal?
YES : Go to Step 14.
NO : Go to Step 12.

<New>
Insert the attached sheet 9 (12/13)

STEP 12. Check whether the diagnosis code is set again.

Check whether the generator control unit sets a diagnosis code again.
(1) Erase the set diagnosis code.
(2) Power supply mode of electric motor switch: OFF
(3) Power supply mode of electric motor switch: ON
(4) Drive the vehicle.
(5) Check if the diagnosis code is set.

Q: Is diagnosis code set?
YES : Replace the oil pump (Refer to GROUP 14B – Electric Oil Pump, EV Oil Cooler Bypass Valve, EV Motor/Generator Oil Chamber). Then go to Step 13.
NO : Intermittent malfunction (Refer to GROUP 00 – How to Use Troubleshooting/How to Cope with Intermittent Malfunctions).

STEP 13 Check whether the diagnosis code is set again.

Check whether the generator control unit sets a diagnosis code again.
(1) Erase the set diagnosis code.
(2) Power supply mode of electric motor switch: OFF
(3) Power supply mode of electric motor switch: ON
(4) Drive the vehicle.
(5) Check if the diagnosis code is set.

Q: Is diagnosis code set?
YES : Replace the power drive unit. Then go to Step 14.
NO : Intermittent malfunction (Refer to GROUP 00 – How to Use Troubleshooting/How to Cope with Intermittent Malfunctions).

STEP 14. Check whether the diagnosis code is set again.

Check whether the generator control unit sets a

Attached sheet 9 (10/13)

Code No. P10AE: Oil pump circuit, open circuit

PROBABLE CAUSES
- Damaged harness wires and connectors
- Noise interruption in signal wires
- Malfunction of the oil pump
- Malfunction of the power drive unit [generator control unit (GCU)]

DIAGNOSIS PROCEDURE

STEP 1. M.U.T.-III CAN bus diagnosis

Q: Is the check result normal?
YES : Go to Step 2.
NO : Repair the CAN bus line.

STEP 2. Use M.U.T.-III to confirm a diagnosis code of other systems.
Check whether the PHEV-ECU sets a power supply-related diagnosis code(s).

Q: Is the check result normal?
YES : Go to Step 3.
NO : Diagnose the system according to the set diagnosis code.

STEP 3. Check the OPCP circuit wires between the oil pump and the power drive unit for short to earth or open circuit.

Q: Is the check result normal?
YES : Go to Step 4.
NO : Repair the harness. Then go to Step 12.

STEP 4. Measure the voltage at the oil pump connector.
(1) Disconnect the connector, and measure at the wiring harness side.
(2) Operate the electric motor switch without depressing the brake pedal and turn ON the power supply mode of electric motor switch. (READY indicator does not illuminate)
(3) Measure the voltage between the OPCP terminal and body earth.

OK: Battery voltage

Q: Is the check result normal?
YES : Go to Step 6.
NO : Go to Step 5.

STEP 5. Check the OPMP circuit wires between the oil pump and the power drive unit for short to earth or open circuit.

Q: Is the check result normal?
YES : Go to Step 6.
NO : Repair the harness. Then go to Step 12.

STEP 6. Check the wire between the oil pump connector and body earth for open circuit.

Q: Is the check result normal?
YES : Go to Step 7.
NO : Repair the harness. Then go to Step 12.

STEP 7. Check the OPCP circuit wires between the oil pump and the power drive unit for short to earth or open circuit.

Q: Is the check result normal?
YES : Go to Step 8.
NO : Repair the harness. Then go to Step 12.

STEP 8. M.U.T.-III data list
(1) Operate the electric motor switch without depressing the brake pedal and turn ON the power supply mode of electric motor switch. (READY indicator does not illuminate)
(2) Check that the following data list display contents are normal.

<Old>
- Item No.31: Oil pump output
  OK: Approximately 5 – 90%
- Item No.32: Oil pump operating condition
  OK: Approximately 15 – 65%

Q: Is the check result normal?
YES : Go to Step 9.
NO <Item No.31>: Abnormal oil pump output : Go to Step 10.
NO <Item No.32>: Abnormal oil pump operation : Go to Step 11.

STEP 9. Inspection using an oscilloscope
(1) Operate the electric motor switch without depressing the brake pedal and turn ON the power supply mode of electric motor switch. (READY indicator does not illuminate)
(2) Check whether the OPCP and OPMP terminals are in good condition.

OK: The values on data list item Nos. 31 and 32, which are read out in Step 9, should conform to the values on an oscilloscope (ON time ratio). Refer to "Inspection procedure by using an

<New> Insert the attached sheet 9 (13/13)

STEP 8. EV oil hose and EV oil pipe check
Check that the component is not clogged or damaged.

Q: Is the check result normal?

YES : Go to Step 9.
NO : Repair or replace a clogged or damaged component. Then go to Step 11.

STEP 9. EV oil cooler bypass valve check
Refer to GROUP 14B – Inspection.

Q: Is the check result normal?

YES : Go to Step 10.
NO : Replace the EV oil cooler bypass valve (Refer to GROUP 14B – Electric Oil Pump/EV Oil Cooler Bypass Valve/Chamber). Then go to Step 11.

STEP 10. M.U.T.-III actuator test <GCU>. <Old>

<New>
Insert the attached sheet 9 (12/13)

Execute the following actuator tests.

- Item No.1: Oil pump

OK: The actuator test is executed and the oil pump runs.

Q: Is the check result normal?

YES : Replace the EV oil cooler (Refer to GROUP 14B – EV Oil Cooler). Then go to Step 11.
NO : Replace the electric oil pump (Refer to GROUP 14B – Electric Oil Pump/EV Oil Cooler Bypass Valve/ Chamber). Then go to Step 11.

STEP 11. Retest the system.

Q: Is the check result normal?

YES : The procedure is complete.
NO : Return to Step 1.

<New>

⚠ CAUTION

When ambient temperature is – 15°C or less, the oil pump may not operate stably. Execute the actuator test only when the temperature is above – 15°C.

(1) Operate the electric motor switch without depressing the brake pedal and turn ON the power supply mode of electric motor switch (READY indicator does not illuminate).

(2) Execute the following actuator tests:

Item 1. Oil pump

(3) Observe the data list below while step (2) is in progress.

Item 32. Oil pump operating condition
OK: 21 – 60%

NOTE: The oil pump operating condition may fluctuate by 1%.

<New>

- The oil pump is not running.

Item No.	Item name	Normal condition
Item 31	Oil pump output	10%
Item 32	Oil pump operating condition*	20%

*NOTE: *:The oil pump operating condition may fluctuate by 1%.*

- When the oil pump is operating.

Item No.	Item name	Normal condition
Item 31	Oil pump output	15 – 85%
Item 32	Oil pump operating condition*	21 – 60%

*NOTE: *:The oil pump operating condition may fluctuate by 1%.*

OK: Normal condition is displayed.

Attached sheet 10

Item No.	M.U.T.-III display	Inspection condition	Drive content	Item
14	Radiator fan 1 actuate(100%)	• Power supply mode of electric motor switch: ON • Vehicle speed: 0 km/h	When the actuator test is started, the radiator fan 1 drives at high speed.	Driven radiator fan
15	Radiator fan 2 actuate(0%)	• Power supply mode of electric motor switch: ON • Vehicle speed: 0 km/h	The actuator test is executed but radiator fan 2 is not activated.	Driven radiator fan
16	Radiator fan 2 actuate(50%)	• Power supply mode of electric motor switch: ON • Vehicle speed: 0 km/h	When the actuator test is started, the radiator fan 2 drives at low speed.	Driven radiator fan
17 <Deleted>	Radiator fan 2 actuate(100%)	• Power supply mode of electric motor switch: ON • Vehicle speed: 0 km/h	When the actuator test is started, the radiator fan 2 drives at high speed.	Driven radiator fan
18	~~Oil pump actuate~~	• Power supply mode of electric motor switch: ON • Vehicle speed: 0 km/h	When the oil pump drives by starting the actuator test.	ON/OFF
19	Buzzer actuate	Power supply mode of electric motor switch: ON	When the actuator test is started, the brake warning buzzer sounds for 3 seconds.	ON/OFF
20	Brake warning lamp actuate	Power supply mode of electric motor switch: ON	When the actuator test is started, the brake warning buzzer sounds for 5 seconds.	ON/OFF

Code No. P105C: Oil pump circuit, short to earth

PROBABLE CAUSES
- Damaged harness wires and connectors
- The oil pump power supply circuit fails (open circuit in earth)
- Malfunction of the oil pump
- Malfunction of the generator control unit

DIAGNOSIS PROCEDURE

STEP 1. M.U.T.-III CAN bus diagnosis

Q: Is the check result normal?
YES : Go to Step 2.
NO : Repair the CAN bus line.

STEP 2. Measure the voltage at the oil pump connector.
(1) Disconnect the connector, and measure at the wiring harness side.
(2) Operate the electric motor switch without depressing the brake pedal and turn ON the power supply mode of electric motor switch. (READY indicator does not illuminate)
(3) Measure the voltage between the power supply terminal and body earth.

OK: Battery voltage

Q: Is the check result normal?
YES : Go to Step 3.
NO : Check the power supply circuit and repair if necessary. Then go to Step 12.

STEP 3. Measure the voltage at the oil pump connector.
(1) Disconnect the connector, and measure at the wiring harness side.
(2) Operate the electric motor switch without depressing the brake pedal and turn ON the power supply mode of electric motor switch. (READY indicator does not illuminate)
(3) Measure the voltage between the OPMP terminal and body earth.

OK: Battery voltage

Q: Is the check result normal?
YES : Go to Step 5.
NO : Go to Step 4.

STEP 4. Check the OPMP circuit wires between the oil pump and the power drive unit for short to earth or open circuit.

Q: Is the check result normal?
YES : Go to Step 5.
NO : Repair the harness. Then go to Step 12.

STEP 5. Measure the voltage at the oil pump connector.
(1) Disconnect the connector, and measure at the wiring harness side.
(2) Operate the electric motor switch without depressing the brake pedal and turn ON the power supply mode of electric motor switch. (READY indicator does not illuminate)
(3) Measure the voltage between the OPCP terminal and body earth.

OK: Battery voltage

Q: Is the check result normal?
YES : Go to Step 7.
NO : Go to Step 6.

STEP 6. Check the OPCP circuit wires between the oil pump and the power drive unit for short to earth or open circuit.

Q: Is the check result normal?
YES : Go to Step 7.
NO : Repair the harness. Then go to Step 12.

STEP 7. Check the wire between the oil pump connector and body earth for open circuit.

Q: Is the check result normal?
YES : Go to Step 8.
NO : Repair the harness. Then go to Step 12.

STEP 8. Check the OPCP circuit wires between the oil pump and the power drive unit for short to earth or open circuit.

Q: Is the check result normal?
YES : Go to Step 9.
NO : Repair the harness. Then go to Step 12.

<Old>

Insert the attached sheet 11 (3/4),(4/4)

<New>

STEP 9. Inspection using an oscilloscope

(1) Operate the electric motor switch without depressing the brake pedal and turn ON the power supply mode of electric motor switch. (READY indicator does not illuminate)
(2) Check whether the OPCP and OPMP terminals are in good condition.

OK:

- **OPCP waveform: 20%**
- **OPMP waveform: 10%**

Q: Is the check result normal?

YES : Go to Step 12.
NO (OPCP waveform fails) : Go to Step 10.
NO (OPMP waveform fails) : Go to Step 11.

STEP 10. Check whether the diagnosis code is stored again.

Check whether the generator control unit stores a diagnosis code again.
(1) Erase the stored diagnosis code.
(2) Power supply mode of electric motor switch: OFF
(3) Power supply mode of electric motor switch: ON
(4) Drive the vehicle.
(5) Check if the diagnosis code is stored.

Q: Is diagnosis code stored?

YES : Replace the power drive unit. Then go to Step 12.
NO : Intermittent malfunction (Refer to GROUP 00 – How to Use Troubleshooting/How to Cope with Intermittent Malfunctions).

STEP 11. Check whether the diagnosis code is stored again.

Check whether the generator control unit stores a diagnosis code again.
(1) Erase the stored diagnosis code.
(2) Power supply mode of electric motor switch: OFF
(3) Power supply mode of electric motor switch: ON
(4) Drive the vehicle.
(5) Check if the diagnosis code is stored.

Q: Is diagnosis code stored?

YES : Replace the power drive unit. Then go to Step 12.
NO : Intermittent malfunction (Refer to GROUP 00 – How to Use Troubleshooting/How to Cope with Intermittent Malfunctions).

STEP 12. Check whether the diagnosis code is stored again.

Check whether the generator control unit stores a diagnosis code again.
(1) Erase the stored diagnosis code.
(2) Power supply mode of electric motor switch: OFF
(3) Power supply mode of electric motor switch: ON
(4) Drive the vehicle.
(5) Check if the diagnosis code is stored.

Q: Is diagnosis code stored?

YES : Return to Step 1.
NO : This diagnosis is complete.

<Old>

<New>

DIAGNOSIS PROCEDURE

STEP 1. M.U.T.-III CAN bus diagnosis

Q: Is the check result normal?
YES : Go to Step 2.
NO : Repair the CAN bus line.

STEP 2. Measure the voltage at the oil pump connector.
(1) Disconnect the connector, and measure at the wiring harness side.
(2) Operate the electric motor switch without depressing the brake pedal and turn ON the power supply mode of electric motor switch. (READY indicator does not illuminate)
(3) Measure the voltage between the power supply terminal and body earth.

OK: Battery voltage

Q: Is the check result normal?
YES : Go to Step 3.
NO : Check the power supply circuit and repair if necessary. Then go to Step 13.

STEP 3. Measure the voltage at the oil pump connector.
(1) Disconnect the connector, and measure at the wiring harness side.
(2) Operate the electric motor switch without depressing the brake pedal and turn ON the power supply mode of electric motor switch. (READY indicator does not illuminate)
(3) Measure the voltage between the OPMP terminal and body earth.

OK: Battery voltage

Q: Is the check result normal?
YES : Go to Step 5.
NO : Go to Step 4.

STEP 4. Check the OPMP circuit wires between the oil pump and the power drive unit for short to earth or open circuit.

Q: Is the check result normal?
YES : Go to Step 5.
NO : Repair the harness. Then go to Step 13.

STEP 5. Measure the voltage at the oil pump connector.
(1) Disconnect the connector, and measure at the wiring harness side.
(2) Operate the electric motor switch without depressing the brake pedal and turn ON the power supply mode of electric motor switch. (READY indicator does not illuminate)
(3) Measure the voltage between the OPCP terminal and body earth.

OK: Approximately 2 – 6 V

Q: Is the check result normal?
YES : Go to Step 7.
NO : Go to Step 6.

STEP 6. Check the OPCP circuit wires between the oil pump and the power drive unit for short to earth or open circuit.

Q: Is the check result normal?
YES : Go to Step 7.
NO : Repair the harness. Then go to Step 13.

STEP 7. Check the wire between the oil pump connector and body earth for open circuit.

Q: Is the check result normal?
YES : Go to Step 8.
NO : Repair the harness. Then go to Step 13.

STEP 8. Check the OPCP circuit wires between the oil pump and the power drive unit for short to earth or open circuit.

Q: Is the check result normal?
YES : Go to Step 9.
NO : Repair the harness. Then go to Step 13.

<New>

STEP 9. M.U.T.-III data list

(1) Operate the electric motor switch without depressing the brake pedal and turn ON the power supply mode of electric motor switch. (READY indicator does not illuminate)
(2) Check that the following data list display contents are normal.
- The oil pump is not running.

Item No.	Item name	Normal condition
Item 31	Oil pump output	10%
Item 32	Oil pump operating condition*	20%

*NOTE: *:The oil pump operating condition may fluctuate by 1%.*

- When the oil pump is operating.

Item No.	Item name	Normal condition
Item 31	Oil pump output	15 – 85%
Item 32	Oil pump operating condition*	21 – 60%

*NOTE: *:The oil pump operating condition may fluctuate by 1%.*

OK:Normal condition is displayed.

Q: Is the check result normal?
YES : Go to Step 10
NO Item No.31: Abnormal oil pump output : Go to Step 11
NO Item No.32: Abnormal oil pump operation : Go to Step 12

STEP 10. Inspection using an oscilloscope

(1) Operate the electric motor switch without depressing the brake pedal and turn ON the power supply mode of electric motor switch. (READY indicator does not illuminate)
(2) Check whether the OPCP and OPMP terminals are in good condition.

OK: The values on data list item Nos. 31 and 32, which are read out in Step 9, should conform to the values on an oscilloscope (ON time ratio). Refer to "Inspection procedure by using an oscilloscope".

Q: Is the check result normal?
YES : Go to Step 13
NO OPCP terminal : Go to Step 11
NO OPMP terminal : Go to Step 12

STEP 11. Check whether the diagnosis code is stored again.

Check whether the generator control unit stores a diagnosis code again.
(1) Erase the stored diagnosis code.
(2) Power supply mode of electric motor switch: OFF
(3) Power supply mode of electric motor switch: ON
(4) Drive the vehicle.
(5) Check if the diagnosis code is stored.

Q: Is diagnosis code stored?
YES : Replace the power drive unit. Then go to Step 12.
NO : Intermittent malfunction (Refer to GROUP 00 – How to Use Troubleshooting/How to Cope with Intermittent Malfunctions).

STEP 12. Check whether the diagnosis code is stored again.

Check whether the generator control unit stores a diagnosis code again.
(1) Erase the stored diagnosis code.
(2) Power supply mode of electric motor switch: OFF
(3) Power supply mode of electric motor switch: ON
(4) Drive the vehicle.
(5) Check if the diagnosis code is stored.

Q: Is diagnosis code stored?
YES : Replace the power drive unit. Then go to Step 13.
NO : Intermittent malfunction (Refer to GROUP 00 – How to Use Troubleshooting/How to Cope with Intermittent Malfunctions).

STEP 13. Check whether the diagnosis code is stored again.

Check whether the generator control unit stores a diagnosis code again.
(1) Erase the stored diagnosis code.
(2) Power supply mode of electric motor switch: OFF
(3) Power supply mode of electric motor switch: ON
(4) Drive the vehicle.
(5) Check if the diagnosis code is stored.

Q: Is diagnosis code stored?
YES : Return to Step 1.
NO : This diagnosis is complete.

Code No. P10AF: Abnormal oil pump voltage/overheat

PROBABLE CAUSES

- The vehicle is driven under high load and at low speed.
- Damaged harness wires and connectors
- The oil pump runs at excessive high speed due to a jump start with higher battery voltage than specified.
- Empty cooling oil
- Internal or ambient temperature rises due to high load
- Broken oil line
- Foreign material trapped in the oil pump
- The oil pump power supply circuit fails
- The oil pump current and temperature detection circuits fail
- Malfunction of the oil pump
- Malfunction of the generator control unit

DIAGNOSIS PROCEDURE

STEP 1. M.U.T.-III CAN bus diagnosis

Q: Is the check result normal?
YES : Go to Step 2.
NO : Repair the CAN bus line.

STEP 2. Ask your customer.

Check that your customer has not carried out any of the following items:

- Jump start with a flat auxiliary battery (of a 24-V vehicle)
- Driving under high load (on an incline/high speed/ towing)
- Generating electricity with the vehicle stationary

Q: Is the check result normal?
YES : Go to Step 13.
NO : Go to Step 3.

STEP 3. Oil line check

Q: Is the check result normal?
YES : Go to Step 4.
NO : Repair the oil line. Then go to Step 13.

STEP 4. Check the oil level.

Refer to GROUP 14B – On-vehicle Service.

Q: Is the check result normal?
YES : Go to Step 5.
NO : Adjust the oil level. Then go to Step 13.

STEP 5. Measure the voltage at the oil pump connector.

(1) Disconnect the connector, and measure at the wiring harness side.
(2) Operate the electric motor switch without depressing the brake pedal and turn ON the power supply mode of electric motor switch. (READY indicator does not illuminate)
(3) Measure the voltage between the power supply terminal and body earth.

OK: System voltage

Q: Is the check result normal?
YES : Go to Step 6.
NO : Check the power supply circuit and repair if necessary. Then go to Step 13.

STEP 6. Measure the voltage at the oil pump connector.

(1) Disconnect the connector, and measure at the wiring harness side.
(2) Operate the electric motor switch without depressing the brake pedal and turn ON the power supply mode of electric motor switch. (READY indicator does not illuminate)
(3) Measure the voltage between the OPMP terminal and body earth.

OK: System voltage

Q: Is the check result normal?
YES : Go to Step 8.
NO : Go to Step 7.

STEP 7. Check the OPMP circuit wires between the oil pump and the power drive unit for short to earth or open circuit.

Q: Is the check result normal?
YES : Go to Step 8.
NO : Repair the harness. Then go to Step 13.

<Old>

Insert the attached sheet 12 (3/5) - (5/5)

<New>

STEP 8. Measure the voltage at the oil pump connector.
(1) Disconnect the connector, and measure at the wiring harness side.
(2) Operate the electric motor switch without depressing the brake pedal and turn ON the power supply mode of electric motor switch. (READY indicator does not illuminate)
(3) Measure the voltage between the OPCP terminal and body earth.

OK: System voltage

Q: Is the check result normal?
YES : Go to Step 10.
NO : Go to Step 9.

STEP 9. Check the OPCP circuit wires between the oil pump and the power drive unit for short to earth or open circuit.

Q: Is the check result normal?
YES : Go to Step 10.
NO : Repair the harness. Then go to Step 13.

STEP 10. Inspection using an oscilloscope
(1) Operate the electric motor switch without depressing the brake pedal and turn ON the power supply mode of electric motor switch. (READY indicator does not illuminate)
(2) Check whether the OPCP and OPMP terminals are in good condition.

OK:
- **OPCP waveform: 0%**
- **OPMP waveform: 10%**

Q: Is the check result normal?
YES : Go to Step 13.
NO (OPCP waveform fails) : Go to Step 11.
NO (OPMP waveform fails) : Go to Step 12.

STEP 11. Check whether the diagnosis code is stored again.
Check whether the generator control unit stores a diagnosis code again.
(1) Erase the stored diagnosis code.
(2) Power supply mode of electric motor switch: OFF
(3) Power supply mode of electric motor switch: ON
(4) Drive the vehicle.
(5) Check if the diagnosis code is stored.

Q: Is diagnosis code stored?
YES : Replace the electric oil pump. (Refer to GROUP 14B – EV Cooling System.) Then go to Step 12.
NO : This diagnosis is complete.

STEP 12. Check whether the diagnosis code is stored again.
Check whether the generator control unit stores a diagnosis code again.
(1) Erase the stored diagnosis code.
(2) Power supply mode of electric motor switch: OFF
(3) Power supply mode of electric motor switch: ON
(4) Drive the vehicle.
(5) Check if the diagnosis code is stored.

Q: Is diagnosis code stored?
YES : Replace the power drive unit. Then go to Step 13.
NO : This diagnosis is complete.

STEP 13. Check whether the diagnosis code is stored again.
Check whether the generator control unit stores a diagnosis code again.
(1) Erase the stored diagnosis code.
(2) Power supply mode of electric motor switch: OFF
(3) Power supply mode of electric motor switch: ON
(4) Drive the vehicle.
(5) Check if the diagnosis code is stored.

Q: Is diagnosis code stored?
YES : Return to Step 1.
NO : This diagnosis is complete.

<Old>

<New>

DIAGNOSIS PROCEDURE

STEP 1. M.U.T.-III CAN bus diagnosis

Q: Is the check result normal?
YES : Go to Step 2.
NO : Repair the CAN bus line.

STEP 2. Ask your customer.
Check that your customer has not carried out any of the following items:
- Jump start with a flat auxiliary battery (of a 24-V vehicle)
- Driving under high load (on an incline/high speed/ towing)
- Generating electricity with the vehicle stationary

Q: Is the check result normal?
YES : Go to Step 15.
NO : Go to Step 3.

STEP 3. Oil line check

Q: Is the check result normal?
YES : Go to Step 4.
NO : Repair the oil line. Then go to Step 15.

STEP 4. Check the oil level.
Refer to GROUP 14B – On-vehicle Service.

Q: Is the check result normal?
YES : Go to Step 5.
NO : Adjust the oil level. Then go to Step 15.

STEP 5. Measure the voltage at the oil pump connector.
(1) Disconnect the connector, and measure at the wiring harness side.
(2) Operate the electric motor switch without depressing the brake pedal and turn ON the power supply mode of electric motor switch. (READY indicator does not illuminate)
(3) Measure the voltage between the power supply terminal and body earth.

OK: System voltage

Q: Is the check result normal?
YES : Go to Step 6.
NO : Check the power supply circuit and repair if necessary. Then go to Step 15.

STEP 6. Measure the voltage at the oil pump connector.
(1) Disconnect the connector, and measure at the wiring harness side.
(2) Operate the electric motor switch without depressing the brake pedal and turn ON the power supply mode of electric motor switch. (READY indicator does not illuminate)
(3) Measure the voltage between the OPMP terminal and body earth.

OK: System voltage

Q: Is the check result normal?
YES : Go to Step 8.
NO : Go to Step 7.

STEP 7. Check the OPMP circuit wires between the oil pump and the power drive unit for short to earth or open circuit.

Q: Is the check result normal?
YES : Go to Step 8.
NO : Repair the harness. Then go to Step 15.

STEP 8. Measure the voltage at the oil pump connector.
(1) Disconnect the connector, and measure at the wiring harness side.
(2) Operate the electric motor switch without depressing the brake pedal and turn ON the power supply mode of electric motor switch. (READY indicator does not illuminate)
(3) Measure the voltage between the OPCP terminal and body earth.

OK: System voltage

Q: Is the check result normal?
YES : Go to Step 10.
NO : Go to Step 9.

STEP 9. Check the OPCP circuit wires between the oil pump and the power drive unit for short to earth or open circuit.

Q: Is the check result normal?
YES : Go to Step 10.
NO : Repair the harness. Then go to Step 15.

<New>

STEP 10. M.U.T.-III data list

(1) Operate the electric motor switch without depressing the brake pedal and turn ON the power supply mode of electric motor switch. (READY indicator does not illuminate)
(2) Check that the following data list display contents are normal.
- The oil pump is not running.

Item No.	Item name	Normal condition
Item 31	Oil pump output	10%
Item 32	Oil pump operating condition*	20%

*NOTE: *:The oil pump operating condition may fluctuate by 1%.*

- When the oil pump is operating.

Item No.	Item name	Normal condition
Item 31	Oil pump output	15 – 85%
Item 32	Oil pump operating condition*	21 – 60%

*NOTE: *:The oil pump operating condition may fluctuate by 1%.*

OK:Normal condition is displayed.

Q: Is the check result normal?
YES : Go to Step 11.
NO OPCP waveform fails : Go to Step 12.
NO OPMP waveform fails : Go to Step 13.

STEP 11. Inspection using an oscilloscope

(1) Operate the electric motor switch without depressing the brake pedal and turn ON the power supply mode of electric motor switch. (READY indicator does not illuminate)
(2) Check whether the OPCP and OPMP terminals are in good condition.

OK: The values on data list item Nos. 31 and 32, which are read out in Step 10, should conform to the values on an oscilloscope (ON time ratio). Refer to "Inspection procedure by using an oscilloscope".

Q: Is the check result normal?
YES : Go to Step 14.
NO OPCP terminal : Go to Step 12.
NO OPMP terminal : Go to Step 13.

STEP 12. Check whether the diagnosis code is set again.

Check whether the generator control unit sets a diagnosis code again.
(1) Erase the set diagnosis code.
(2) Power supply mode of electric motor switch: OFF
(3) Power supply mode of electric motor switch: ON
(4) Drive the vehicle.
(5) Check if the diagnosis code is set.

Q: Is diagnosis code set?
YES : Replace the electric oil pump. (Refer to GROUP 14B – EV Cooling System.) Then go to Step 14.
NO : This diagnosis is complete.

STEP 13. Check whether the diagnosis code is set again.

Check whether the generator control unit set a diagnosis code again.
(1) Erase the set diagnosis code.
(2) Power supply mode of electric motor switch: OFF
(3) Power supply mode of electric motor switch: ON
(4) Drive the vehicle.
(5) Check if the diagnosis code is set.

Q: Is diagnosis code set?

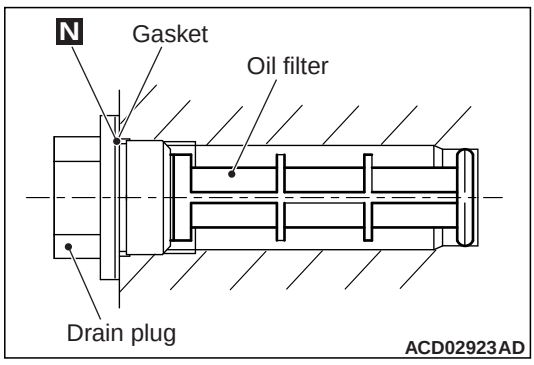

YES : When you remove the generator drain plug, check that the oil filter behind it is not clogged or damaged. If necessary, clean or replace the oil filter. (Refer to GROUP 14B – On-vehicle Service.) Then go to Step 14.
NO : This diagnosis is complete.

STEP 14. Check whether the diagnosis code is set again.

Check whether the generator control unit sets a

<New>

diagnosis code again.
(1) Erase the set diagnosis code.
(2) Power supply mode of electric motor switch: OFF
(3) Power supply mode of electric motor switch: ON
(4) Drive the vehicle.
(5) Check if the diagnosis code is set.

Q: Is diagnosis code set?
YES : Replace the power drive unit. Then go to Step 15.
NO : This diagnosis is complete.

STEP 15. Check whether the diagnosis code is set again.
Check whether the generator control unit sets a diagnosis code again.
(1) Erase the set diagnosis code.
(2) Power supply mode of electric motor switch: OFF
(3) Power supply mode of electric motor switch: ON
(4) Drive the vehicle.
(5) Check if the diagnosis code is set.

Q: Is diagnosis code set?
YES : Return to Step 1.
NO : This diagnosis is complete.

Attached sheet 13 (1/4)

Code No. P10AD: Oil pump drive circuit fails

PROBABLE CAUSES
- Malfunction of the harness, connector
- Noise interruption in signal wires
- Malfunction of the oil pump
- Malfunction of the generator control unit

DIAGNOSIS PROCEDURE

STEP 1. M.U.T.-III CAN bus diagnosis

Q: Is the check result normal?
YES : Go to Step 2.
NO : Repair the CAN bus line.

STEP 2. Measure the voltage at the oil pump connector.
(1) Disconnect the connector, and measure at the wiring harness side.
(2) Operate the electric motor switch without depressing the brake pedal and turn ON the power supply mode of electric motor switch. (READY indicator does not illuminate)
(3) Measure the voltage between the power supply terminal and body earth.

OK: System battery

Q: Is the check result normal?
YES : Go to Step 3.
NO : Check the power supply circuit and repair if necessary. Then go to Step 8.

STEP 3. Measure the voltage at the oil pump connector.
(1) Disconnect the connector, and measure at the wiring harness side.
(2) Operate the electric motor switch without depressing the brake pedal and turn ON the power supply mode of electric motor switch. (READY indicator does not illuminate)
(3) Measure the voltage between the OPMP terminal and body earth.

OK: System battery

Q: Is the check result normal?
YES : Go to Step 5.
NO : Go to Step 4.

STEP 4. Check the OPMP circuit wires between the oil pump and the power drive unit for short to earth or open circuit.

Q: Is the check result normal?
YES : Go to Step 6.
NO : Repair the harness. Then go to Step 8.

STEP 5. Inspection using an oscilloscope
(1) Operate the electric motor switch without depressing the brake pedal and turn ON the power supply mode of electric motor switch. (READY indicator does not illuminate)
(2) Check whether the OPMP terminal is in good condition.

OK: OPMP waveform: 10%

Q: Is the check result normal?
YES : Go to Step 8.
NO : Go to Step 6.

STEP 6. Check whether the diagnosis code is stored again.
Check whether the generator control unit stores a diagnosis code again.
(1) Erase the stored diagnosis code.
(2) Power supply mode of electric motor switch: OFF
(3) Power supply mode of electric motor switch: ON
(4) Drive the vehicle.
(5) Check if the diagnosis code is stored.

Q: Is diagnosis code stored?
YES : Replace the electric oil pump. (Refer to GROUP 14B – EV Cooling System.) Then go to Step 8.
NO : Go to Step 7.

STEP 7. Check whether the diagnosis code is stored again.
Check whether the generator control unit stores a diagnosis code again.
(1) Erase the stored diagnosis code.
(2) Power supply mode of electric motor switch: OFF
(3) Power supply mode of electric motor switch: ON
(4) Drive the vehicle.
(5) Check if the diagnosis code is stored.

Q: Is diagnosis code stored?
YES : Replace the power drive unit. Then go to Step 8.
NO : Intermittent malfunction (Refer to GROUP 00 – How to Use Troubleshooting/How to Cope with Intermittent Malfunctions).

<Old>

Insert the attached sheet 13 (3/4),(4/4)

<New>

STEP 8. Check whether the diagnosis code is stored again. Check whether the generator control unit stores a	diagnosis code again. (1) Erase the stored diagnosis code. (2) Power supply mode of electric motor switch: OFF (3) Power supply mode of electric motor switch: ON (4) Drive the vehicle. (5) Check if the diagnosis code is stored. **Q: Is diagnosis code stored?** **YES :** Return to Step 1. **NO :** This diagnosis is complete.

<Old>

<New>

DIAGNOSIS PROCEDURE

STEP 1. M.U.T.-III CAN bus diagnosis

Q: Is the check result normal?
YES : Go to Step 2.
NO : Repair the CAN bus line.

STEP 2. Measure the voltage at the oil pump connector.
(1) Disconnect the connector, and measure at the wiring harness side.
(2) Operate the electric motor switch without depressing the brake pedal and turn ON the power supply mode of electric motor switch. (READY indicator does not illuminate)
(3) Measure the voltage between the power supply terminal and body earth.

OK: System battery

Q: Is the check result normal?
YES : Go to Step 3.
NO : Check the power supply circuit and repair if necessary. Then go to Step 9.

STEP 3. Measure the voltage at the oil pump connector.
(1) Disconnect the connector, and measure at the wiring harness side.
(2) Operate the electric motor switch without depressing the brake pedal and turn ON the power supply mode of electric motor switch. (READY indicator does not illuminate)
(3) Measure the voltage between the OPMP terminal and body earth.

OK: 0 V

Q: Is the check result normal?
YES : Go to Step 5.
NO : Go to Step 4.

STEP 4. Check the OPMP circuit wires between the oil pump and the power drive unit for short to earth or open circuit.

Q: Is the check result normal?
YES : Go to Step 7.
NO : Repair the harness. Then go to Step 9.

STEP 5. M.U.T.-III data list
(1) Operate the electric motor switch without depressing the brake pedal and turn ON the power supply mode of electric motor switch. (READY indicator does not illuminate)
(2) Check that the following data list display contents are normal.
- The oil pump is not running.

Item No.	Item name	Normal condition
Item 31	Oil pump output	10%
Item 32	Oil pump operating condition*	20%

*NOTE: *:The oil pump operating condition may fluctuate by 1%.*

- When the oil pump is operating.

Item No.	Item name	Normal condition
Item 31	Oil pump output	15 – 85%
Item 32	Oil pump operating condition*	21 – 60%

*NOTE: *:The oil pump operating condition may fluctuate by 1%.*

OK:Normal condition is displayed.

Q: Is the check result normal?
YES : Go to Step 6.
NO Item No.31: Abnormal oil pump output : Go to Step 7.
NO Item No.32: Abnormal oil pump operation : Go to Step 8.

STEP 6. Inspection using an oscilloscope
(1) Operate the electric motor switch without depressing the brake pedal and turn ON the power supply mode of electric motor switch. (READY indicator does not illuminate)
(2) Check whether the OPCP and OPMP terminals are in good condition.

OK: The values on data list item Nos. 31 and 32, which are read out in Step 5, should conform to the values on an oscilloscope (ON time ratio). Refer to "Inspection procedure by using an

<New>

oscilloscope".

Q: Is the check result normal?
YES : Go to Step 9.
NO OPCP terminal : Go to Step 7.
NO OPMP terminal : Go to Step 8.

STEP 7. Check whether the diagnosis code is set again.
Check whether the generator control unit sets a diagnosis code again.
(1) Erase the set diagnosis code.
(2) Power supply mode of electric motor switch: OFF
(3) Power supply mode of electric motor switch: ON
(4) Drive the vehicle.
(5) Check if the diagnosis code is set.

Q: Is diagnosis code set?
YES : Replace the electric oil pump. (Refer to GROUP 14B – EV Cooling System.) Then go to Step 9.
NO : Go to Step 8.

STEP 8. Check whether the diagnosis code is set again.
Check whether the generator control unit sets a diagnosis code again.
(1) Erase the set diagnosis code.
(2) Power supply mode of electric motor switch: OFF
(3) Power supply mode of electric motor switch: ON
(4) Drive the vehicle.
(5) Check if the diagnosis code is set.

Q: Is diagnosis code set?
YES : Replace the power drive unit. Then go to Step 9.
NO : Intermittent malfunction (Refer to GROUP 00 – How to Use Troubleshooting/How to Cope with Intermittent Malfunctions).

STEP 9. Check whether the diagnosis code is set again.
Check whether the generator control unit sets a diagnosis code again.
(1) Erase the set diagnosis code.
(2) Power supply mode of electric motor switch: OFF
(3) Power supply mode of electric motor switch: ON
(4) Drive the vehicle.
(5) Check if the diagnosis code is set.

Q: Is diagnosis code set?
YES : Return to Step 1.
NO : This diagnosis is complete.

Code No. P10AE: Oil pump circuit, open circuit

PROBABLE CAUSES
- Damaged harness wires and connectors
- Noise interruption in signal wires
- Malfunction of the oil pump
- Malfunction of the generator control unit

DIAGNOSIS PROCEDURE

STEP 1. M.U.T.-III CAN bus diagnosis

Q: Is the check result normal?
YES : Go to Step 2.
NO : Repair the CAN bus line.

STEP 2. Use M.U.T.-III to confirm a diagnosis code of other systems.
Check whether the PHEV-ECU stores a power supply-related diagnosis code(s).

Q: Is the check result normal?
YES : Go to Step 3.
NO : Diagnose the system according to the stored diagnosis code.

STEP 3. Check the OPMP circuit wires between the oil pump and the power drive unit for short to earth or open circuit.

Q: Is the check result normal?
YES : Go to Step 4.
NO : Repair the harness. Then go to Step 11.

STEP 4. Measure the voltage at the oil pump connector.
(1) Disconnect the connector, and measure at the wiring harness side.
(2) Operate the electric motor switch without depressing the brake pedal and turn ON the power supply mode of electric motor switch. (READY indicator does not illuminate)
(3) Measure the voltage between the OPCP terminal and body earth.

OK: Battery voltage

Q: Is the check result normal?
YES : Go to Step 6.
NO : Go to Step 5.

STEP 5. Check the OPCP circuit wires between the oil pump and the power drive unit for short to earth or open circuit.

Q: Is the check result normal?
YES : Go to Step 6.
NO : Repair the harness. Then go to Step 11.

STEP 6. Check the wire between the oil pump connector and body earth for open circuit.

Q: Is the check result normal?
YES : Go to Step 7.
NO : Repair the harness. Then go to Step 11.

STEP 7. Check the OPCP circuit wires between the oil pump and the power drive unit for short to earth or open circuit.

Q: Is the check result normal?
YES : Go to Step 8.
NO : Repair the harness. Then go to Step 11.

STEP 8. Inspection using an oscilloscope
(1) Operate the electric motor switch without depressing the brake pedal and turn ON the power supply mode of electric motor switch. (READY indicator does not illuminate)
(2) Check whether the OPCP and OPMP terminals are in good condition.

OK:
- **OPCP waveform: 20%**
- **OPMP waveform: 10%**

Q: Is the check result normal?
YES : Go to Step 11.
NO (OPCP waveform fails) : Go to Step 9.
NO (OPMP waveform fails) : Go to Step 10.

STEP 9. Check whether the diagnosis code is stored again.
Check whether the generator control unit stores a diagnosis code again.
(1) Erase the stored diagnosis code.
(2) Power supply mode of electric motor switch: OFF
(3) Power supply mode of electric motor switch: ON
(4) Drive the vehicle.
(5) Check if the diagnosis code is stored.

Q: Is diagnosis code stored?
YES : Replace the oil pump. (Refer to GROUP 14B – Electric oil pump, EV oil cooler bypass valve, EV motor and generator oil chamber.) Then go to Step 11.
NO : This diagnosis is complete.

<Old>

Insert the attached sheet 14 (3/4),(4/4)

<New>

STEP 10. Check whether the diagnosis code is stored again.

Check whether the generator control unit stores a diagnosis code again.

(1) Erase the stored diagnosis code.
(2) Power supply mode of electric motor switch: OFF
(3) Power supply mode of electric motor switch: ON
(4) Drive the vehicle.
(5) Check if the diagnosis code is stored.

Q: Is diagnosis code stored?

YES : Replace the power drive unit. Then go to Step 11.

NO : Intermittent malfunction (Refer to GROUP 00 – How to Use Troubleshooting/How to Cope with Intermittent Malfunctions).

STEP 11. Check whether the diagnosis code is stored again.

Check whether the generator control unit stores a diagnosis code again.

(1) Erase the stored diagnosis code.
(2) Power supply mode of electric motor switch: OFF
(3) Power supply mode of electric motor switch: ON
(4) Drive the vehicle.
(5) Check if the diagnosis code is stored.

Q: Is diagnosis code stored?

YES : Return to Step 1.

NO : This diagnosis is complete.

<Old>

<New>

DIAGNOSIS PROCEDURE

STEP 1. M.U.T.-III CAN bus diagnosis

Q: Is the check result normal?
YES : Go to Step 2.
NO : Repair the CAN bus line.

STEP 2. Use M.U.T.-III to confirm a diagnosis code of other systems.
Check whether the PHEV-ECU sets a power supply-related diagnosis code(s).

Q: Is the check result normal?
YES : Go to Step 3.
NO : Diagnose the system according to the set diagnosis code.

STEP 3. Check the OPCP circuit wires between the oil pump and the power drive unit for short to earth or open circuit.

Q: Is the check result normal?
YES : Go to Step 4.
NO : Repair the harness. Then go to Step 12.

STEP 4. Measure the voltage at the oil pump connector.
(1) Disconnect the connector, and measure at the wiring harness side.
(2) Operate the electric motor switch without depressing the brake pedal and turn ON the power supply mode of electric motor switch. (READY indicator does not illuminate)
(3) Measure the voltage between the OPCP terminal and body earth.

OK: Approximately 2 – 6 V

Q: Is the check result normal?
YES : Go to Step 6.
NO : Go to Step 5.

STEP 5. Check the OPMP circuit wires between the oil pump and the power drive unit for short to earth or open circuit.

Q: Is the check result normal?
YES : Go to Step 6.
NO : Repair the harness. Then go to Step 12.

STEP 6. Check the wire between the oil pump connector and body earth for open circuit.

Q: Is the check result normal?
YES : Go to Step 7.
NO : Repair the harness. Then go to Step 12.

STEP 7. Check the OPCP circuit wires between the oil pump and the power drive unit for short to earth or open circuit.

Q: Is the check result normal?
YES : Go to Step 8.
NO : Repair the harness. Then go to Step 12.

STEP 8. M.U.T.-III data list
(1) Operate the electric motor switch without depressing the brake pedal and turn ON the power supply mode of electric motor switch. (READY indicator does not illuminate)
(2) Check that the following data list display contents are normal.
- The oil pump is not running.

Item No.	Item name	Normal condition
Item 31	Oil pump output	10%
Item 32	Oil pump operating condition*	20%

*NOTE: *:The oil pump operating condition may fluctuate by 1%.*

- When the oil pump is operating.

Item No.	Item name	Normal condition
Item 31	Oil pump output	15 – 85%
Item 32	Oil pump operating condition*	21 – 60%

*NOTE: *:The oil pump operating condition may fluctuate by 1%.*

OK:Normal condition is displayed.

Q: Is the check result normal?
YES : Go to Step 9.
NO Item No.31: Abnormal oil pump output : Go to Step 10.
NO Item No.32: Abnormal oil pump operation : Go to Step 11.

<New>

STEP 9. Inspection using an oscilloscope

(1) Operate the electric motor switch without depressing the brake pedal and turn ON the power supply mode of electric motor switch. (READY indicator does not illuminate)
(2) Check whether the OPCP and OPMP terminals are in good condition.

OK: The values on data list item Nos. 31 and 32, which are read out in Step 8, should conform to the values on an oscilloscope (ON time ratio). Refer to "Inspection procedure by using an oscilloscope".

Q: Is the check result normal?

YES : Go to Step 12.
NO OPCP terminal : Go to Step 10.
NO OPMP terminal : Go to Step 11.

STEP 10. Check whether the diagnosis code is set again.

Check whether the generator control unit sets a diagnosis code again.
(1) Erase the set diagnosis code.
(2) Power supply mode of electric motor switch: OFF
(3) Power supply mode of electric motor switch: ON
(4) Drive the vehicle.
(5) Check if the diagnosis code is set.

Q: Is diagnosis code set?

YES : Replace the oil pump. (Refer to GROUP 14B – Electric oil pump, EV oil cooler bypass valve, EV motor and generator oil chamber.) Then go to Step 12.
NO : This diagnosis is complete.

STEP 11. Check whether the diagnosis code is set again.

Check whether the generator control unit sets a diagnosis code again.
(1) Erase the set diagnosis code.
(2) Power supply mode of electric motor switch: OFF
(3) Power supply mode of electric motor switch: ON
(4) Drive the vehicle.
(5) Check if the diagnosis code is set.

Q: Is diagnosis code set?

YES : Replace the power drive unit. Then go to Step 12.
NO : Intermittent malfunction (Refer to GROUP 00 – How to Use Troubleshooting/How to Cope with Intermittent Malfunctions).

STEP 12. Check whether the diagnosis code is set again.

Check whether the generator control unit sets a diagnosis code again.
(1) Erase the set diagnosis code.
(2) Power supply mode of electric motor switch: OFF
(3) Power supply mode of electric motor switch: ON
(4) Drive the vehicle.
(5) Check if the diagnosis code is set.

Q: Is diagnosis code set?

YES : Return to Step 1.
NO : This diagnosis is complete.

Item No.	M.U.T.-III display	Inspection conditions	Normal conditions
23	IGCT voltage keep request	The PHEV-ECU requests the IGCT relay to retain power supply to the IGCT with the power supply mode of the electric motor switch turned on.	No
		The PHEV-ECU does not request the IGCT relay to retain power supply to the IGCT with the power supply mode of the electric motor switch turned on.	Yes
24	HW gate	–	OFF
		–	ON
25	HW shutdown	–	OFF
		–	ON
26	Motor coil maximum temperature	The selector lever is at the P or N position with the power supply mode of the electric motor switch turned on.	–°C
27	IGBT maximum temperature	The selector lever is at the P or N position with the power supply mode of the electric motor switch turned on.	–°C
28	CPU temperature	The selector lever is at the P or N position with the power supply mode of the electric motor switch turned on.	–°C
29	IGBT estimated temperature	The selector lever is at the P or N position with the power supply mode of the electric motor switch turned on.	–°C
30	Condenser temperature	The selector lever is at the P or N position with the power supply mode of the electric motor switch turned on.	–°C
<Old>			
31	Oil pump output	The selector lever is at the P or N position with the power supply mode of the electric motor switch turned on.	0 – 100%
32	Oil pump operating condition	The selector lever is at the P or N position with the power supply mode of the electric motor switch turned on.	0 – 60%
33	Motor oil temperature	The selector lever is at the P or N position with the power supply mode of the electric motor switch turned on.	–°C
34	Motor current	The selector lever is at the P or N position with the power supply mode of the electric motor switch turned on.	10 A or less
35	Motor current2	The selector lever is at the P or N position with the power supply mode of the electric motor switch turned on.	10 A or less
36	Motor current (target: dif)	The selector lever is at the P or N position with the power supply mode of the electric motor switch turned on.	10 A or less

<New>

31	Oil pump output	The oil pump is not running.	10%
		When the oil pump is operating.	15 – 85%
32	Oil pump operating condition	The oil pump is not running.	20%
		When the oil pump is operating.	21 – 60%

Item No.	M.U.T.-III display	Inspection conditions	Normal conditions
37	Motor current2 (target: dif)	The selector lever is at the P or N position with the power supply mode of the electric motor switch turned on.	10 A or less
38	IGBT1 temperature	The selector lever is at the P or N position with the power supply mode of the electric motor switch turned on.	–°C
39	IGBT2 temperature	The selector lever is at the P or N position with the power supply mode of the electric motor switch turned on.	–°C
40	Coil temperature(U)	The selector lever is at the P or N position with the power supply mode of the electric motor switch turned on.	–°C
41	Coil temperature(W)	The selector lever is at the P or N position with the power supply mode of the electric motor switch turned on.	–°C
42	Req. coolant water flow quantity	The selector lever is at the P or N position with the power supply mode of the electric motor switch turned on.	0 – 10 L
43	CPU operation time	The selector lever is at the P or N position with the power supply mode of the electric motor switch turned on.	(accumulated energisation time) hour
44	MCU soft version	The selector lever is at the P or N position with the power supply mode of the electric motor switch turned on.	–
45	IGBT3 temperature	The selector lever is at the P or N position with the power supply mode of the electric motor switch turned on.	–°C

REMCU

Item No.	M.U.T.-III display	Inspection conditions	Normal conditions
1	Motor torque request	The selector lever is at the P or N position with the power supply mode of the electric motor switch turned on.	0 Nm
2	PHEV-ECU run mode	Power supply mode of electric motor switch: OFF	OFF
		–	Reset
		Ready indicator is illuminated	High voltage ON
		When the vehicle is being driven	Torque control
		Operate the electric motor switch without depressing the brake pedal and turn ON the power supply mode of electric motor switch.	High voltage OFF
		During charging	Charge control
		Data is being written to the power drive unit.	F-ROM writing
3	Ready condition(PHEV)	Ready indicator is not illuminated	No
		Ready indicator is illuminated	Yes

<Added>

*NOTE: *: The oil pump operating condition may fluctuate by 1%.*

Attached sheet 16

ACTUATOR TEST TABLE

Generator control unit

Item No.	M.U.T.-III display	Check item	Driven component	Item
1	Oil pump	• Turn off the power supply mode of the electric motor switch. • Vehicle speed: 0km/h • The oil pump-related diagnosis codes (P105C, P105B, P10AF, P10AD or P10AE) are not a current fault.	• When all of the check conditions are met, the oil pump is not activated. • The actuator test is executed and the oil pump runs.	ON/OFF

<Added>

⚠ CAUTION
When ambient temperature is - 15 °C or less, the oil pump may not operate stably. Execute the actuator test only when the temperature is above - 15 °C.

Attached sheet 17

Check at FEMCU, generator control unit, and REMCU terminals

Check at FEMCU connector terminal

B-142

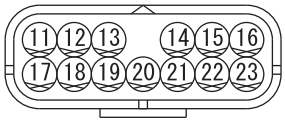

ACC07233AB

Terminal No.	Terminal code	Check item	Checking requirements	Normal condition
11	R1	MR1	Disconnect the connector, and measure the resistance between terminal Nos. 11 and 17.	29Ω – 38Ω
17	R2	MR2		
12	S1	MS1	Disconnect the connector, and measure the resistance between terminal Nos. 12 and 18.	70Ω – 92Ω
18	S3	MS3		
13	S2	MS2	Disconnect the connector, and measure the resistance between terminal Nos. 13 and 19.	60Ω – 83Ω
19	S4	MS4		
14	TH1	Temperature in the U phase coil wire	Disconnect the connector, and measure the resistance between terminal Nos. 14 and 21.	Approx. 400kΩ – 600kΩ: -20°C Approx. 140kΩ – 200kΩ: 0°C Approx. 55kΩ – 70kΩ: 20°C Approx. 23kΩ – 30kΩ: 40°C
21	TH1G	Temperature in the U phase coil wire (-)		
15	TH2	Temperature in the W phase coil wire	Disconnect the connector, and measure the resistance between terminal Nos. 15 and 22.	
22	TH2G	Temperature in the W phase coil wire (-)		
20	MGND	ECU power supply earth	Always	1 V or less

B-143

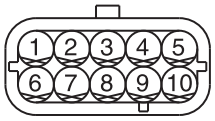

AC901881AD

Terminal No.	Terminal code	Check item	Checking requirements	Normal condition
1	OPMP	Oil pump ~~drive signal~~ <deleted>	Actuator test mode (oil pump ~~drive signal~~): ON	Battery voltage
2	GSDN	Generator control unit shut-down signal	The engine is running	1 V or less
3	CAEH	CAN communication	–	–
4	MSDN	FEMCU shut-down signal	Turn on the power supply mode of the electric motor switch, wait until the READY (ready to drive) indicator illuminates, and then move the selector lever to any of the D, R or B positions.	1 V or less