SERVICE BULLETIN

MITSUBISHI MOTORS

GLOBAL AFTER SALES OFFICE, MITSUBISHI MOTORS CORPORATION

PURPOSE : CHANGE	ISSUE NO. : MSB-16EXML26-001	DATE : 2016-01-13
SUBJECT : Changes of the removal and installation procedure of the front driveshaft and the addition of the grease application instruction		<DESTINATION/MODEL> (As per attached sheet 2) <M/Y> 07-12
GROUP : Gr:26(Front axle)		

1. Description :

Please refer to the attached document for the information about the change of mention in the applicable service manual.

1)Change of the removal and installation procedure of the front driveshaft

<New procedure>

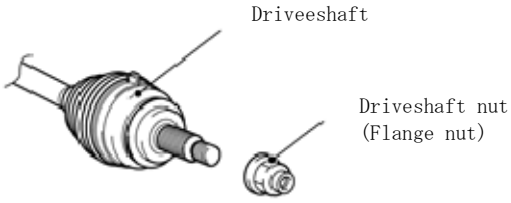

<Old procedure>

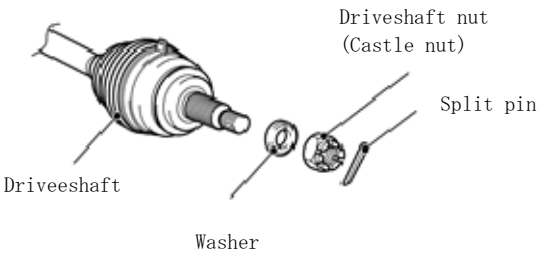

2)Addition of the grease application instruction
The grease application instruction between the front driveshaft assembly and the wheel bearing has been added.

2. Affected service manuals :

Please refer to the attached document (Attached sheet 2)

3. About the details :

Please refer to the attached document.
Only for MMNA : Please see the attached sheets 11-17
Other destributors except for MMNA : Please see the attached sheets 18-29

Attached sheet 2 (1/7)

<MMNA>

OUTLANDER

Applicable manual	Pub. No.	Applicable title (INFO ID)	Contents
2007 OUTLANDER Service Manual	MSCD-007B-2007	LUBRICANTS (M261-00-041-29900-01)	Attached sheet 11A
		SPECIAL TOOLS (M261-00-061-25901-01)	Attached sheet 12
		FRONT AXLE HUB ASSEMBLY REMOVAL AND INSTALLATION (M261-00-171-50501-01)	Attached sheet 13, 17
		DRIVESHAFT ASSEMBLY REMOVAL AND INSTALLATION(M261-00-351-67101-01)	Attached sheet 14,17
2008 OUTLANDER Service Manual	MSCD-007B-2008	LUBRICANTS (M261-00-041-11401-01)	Attached sheet 11A
		SPECIAL TOOLS (M261-00-061-25901-01)	Attached sheet 12
		FRONT AXLE HUB ASSEMBLY REMOVAL AND INSTALLATION(M261-00-171-50501-01)	Attached sheet 13, 17
		DRIVESHAFT ASSEMBLY REMOVAL AND INSTALLATION(M261-00-351-65901-01)	Attached sheet 14,17
2009 OUTLANDER Service Manual	MSCD-007B-2009	LUBRICANTS (M261-00-041-11401-01)	Attached sheet 11A
		SPECIAL TOOLS (M261-00-061-25901-01)	Attached sheet 12
		FRONT AXLE HUB ASSEMBLY REMOVAL AND INSTALLATION (M261-00-171-50501-01)	Attached sheet 13, 17
		DRIVESHAFT ASSEMBLY REMOVAL AND INSTALLATION (M261-00-351-65901-01)	Attached sheet 14,17
2010 OUTLANDER Service Manual	MSCD-007B-2010	LUBRICANTS (M261-00-041-38500-01)	Attached sheet 11A
		SPECIAL TOOLS (M261-00-061-25901-01)	Attached sheet 12
		FRONT AXLE HUB ASSEMBLY REMOVAL AND INSTALLATION (M261-00-171-67900-01)	Attached sheet 13, 17
		DRIVESHAFT ASSEMBLY REMOVAL AND INSTALLATION (M261-00-351-96100-01)	Attached sheet 14,17
2011 OUTLANDER Service Manual	MSCD-007B-2011	LUBRICANTS (M261-00-041-38500-01)	Attached sheet 11A
		SPECIAL TOOLS (M261-00-061-25901-01)	Attached sheet 12
		FRONT AXLE HUB ASSEMBLY REMOVAL AND INSTALLATION (M261-00-171-67900-01)	Attached sheet 13, 17
		DRIVESHAFT ASSEMBLY REMOVAL AND INSTALLATION (M261-00-351-96100-01)	Attached sheet 14,17
2012 OUTLANDER Service Manual	MSCD-007B-2012	LUBRICANTS (M261-00-041-38500-01)	Attached sheet 11A
		SPECIAL TOOLS (M261-00-061-25901-01)	Attached sheet 12
		FRONT AXLE HUB ASSEMBLY REMOVAL AND INSTALLATION (M261-00-171-67900-01)	Attached sheet 13, 17
		DRIVESHAFT ASSEMBLY REMOVAL AND INSTALLATION (M261-00-351-96100-01)	Attached sheet 14,17

OUTLANDER SPORT/RVR

Applicable manual	Pub. No.	Applicable title (INFO ID)	Contents
2011 OUTLANDER SPORT Service Manual	MSCD-017B-2011	LUBRICANTS (M261-00-041-67501-01)	Attached sheet 11B
		SPECIAL TOOLS (M261-00-061-73200-01)	Attached sheet 12
		FRONT AXLE HUB ASSEMBLY REMOVAL AND INSTALLATION (M261-00-171-89500-01)	Attached sheet 13, 17
		DRIVESHAFT ASSEMBLY REMOVAL AND INSTALLATION (M261-00-352-21000-01)	Attached sheet 15, 17
2012 OUTLANDER SPORT Service Manual	MSCD-017B-2012	LUBRICANTS (M261-00-041-67501-01)	Attached sheet 11B
		SPECIAL TOOLS (M261-00-061-73200-01)	Attached sheet 12
		FRONT AXLE HUB ASSEMBLY REMOVAL AND INSTALLATION (M261-00-171-89500-01)	Attached sheet 13, 17
		DRIVESHAFT ASSEMBLY REMOVAL AND INSTALLATION (M261-00-352-21000-01)	Attached sheet 15, 17

Attached sheet 2 (2/7)

LANCER/LANCER SPORTBACK

Applicable manual	Pub. No.	Applicable title (INFO ID)	Contents
2008 LANCER Service Manual	MSCD-106B-2008	LUBRICANTS (M261-00-041-39600-010)	Attached sheet 11C
		SPECIAL TOOLS (M261-00-061-55000-01)	Attached sheet 12
		FRONT AXLE HUB ASSEMBLY REMOVAL AND INSTALLATION (M261-00-171-12904-01)	Attached sheet 13, 17
		DRIVESHAFT ASSEMBLY REMOVAL AND INSTALLATION (M261-00-351-18704-01)	Attached sheet 16, 17
2009 LANCER Service Manual	MSCD-106B-2009	LUBRICANTS (M261-00-040-93900-01)	Attached sheet 11C
		SPECIAL TOOLS (M261-00-061-55002-01)	Attached sheet 12
		FRONT AXLE HUB ASSEMBLY REMOVAL AND INSTALLATION (M261-00-171-12902-01)	Attached sheet 13, 17
		DRIVESHAFT ASSEMBLY REMOVAL AND INSTALLATION (M261-00-351-18702-01)	Attached sheet 16, 17
2009 LANCER SPORTBACK Service Manual	MSCD-014B-2009	LUBRICANTS (M261-00-040-93902-01)	Attached sheet 11C
		SPECIAL TOOLS (M261-00-061-05502-01)	Attached sheet 12
		FRONT AXLE HUB ASSEMBLY REMOVAL AND INSTALLATION (M261-00-171-88400-01)	Attached sheet 13, 17
		DRIVESHAFT ASSEMBLY REMOVAL AND INSTALLATION (M261-00-352-20900-01)	Attached sheet 16, 17
2010 LANCER Service Manual	MSCD-106B-2010	LUBRICANTS (M261-00-040-93902-01)	Attached sheet 11C
		SPECIAL TOOLS (M261-00-061-55002-01)	Attached sheet 12
		FRONT AXLE HUB ASSEMBLY REMOVAL AND INSTALLATION (M261-00-171-12904-01)	Attached sheet 13, 17
		DRIVESHAFT ASSEMBLY REMOVAL AND INSTALLATION (M261-00-351-18704-01)	Attached sheet 16, 17
2010 LANCER SPORTBACK Service Manual	MSCD-014B-2010	LUBRICANTS (M261-00-040-93902-01)	Attached sheet 11C
		SPECIAL TOOLS (M261-00-061-55002-01)	Attached sheet 12
		FRONT AXLE HUB ASSEMBLY REMOVAL AND INSTALLATION (M261-00-171-61302-01)	Attached sheet 13, 17
		DRIVESHAFT ASSEMBLY REMOVAL AND INSTALLATION (M261-00-351-77802-01)	Attached sheet 16, 17

<EXCEPT MMNA>

Attached sheet 2 (3/7)

OUTLANDER

(EUROPE/RUSSIA)

Applicable manual	Pub. No.	Applicable title (INFO ID)	Contents
2007 OUTLANDER Workshop Manual	CGXE07E1-CD (ENGLISH) CGXS07E1-CD (SPANISH) CGXF07E1-CD (FRENCH) CGXG07E1-CD (GERMAN) RUSSIA:N/A	LUBRICANTS (M261-00-040-88700-01)	Attached sheet 18A
		SPECIAL TOOL (M261-00-061-03300-01)	Attached sheet 19
		FRONT AXLE HUB ASSEMBLY REMOVAL AND INSTALLATION (M261-00-171-07700-01)	Attached sheet 20, 29
		DRIVESHAFT ASSEMBLY REMOVAL AND INSTALLATION (M261-00-351-13200-01)	Attached sheet 21, 29
2008 OUTLANDER Workshop Manual	CGXE08E2-CD (ENGLISH) CGXS08E2-CD (SPANISH) CGXF08E2-CD (FRENCH) CGXG08E2-CD (GERMAN) RUSSIA:N/A	LUBRICANTS (M261-00-041-12500-01)	Attached sheet 18A
		SPECIAL TOOL (M261-00-061-13000-01)	Attached sheet 19
		FRONT AXLE HUB ASSEMBLY REMOVAL AND INSTALLATION (M261-00-171-07700-01)	Attached sheet 20, 29
		DRIVESHAFT ASSEMBLY REMOVAL AND INSTALLATION (M261-00-351-13200-01)	Attached sheet 21, 29
2009 OUTLANDER Workshop Manual	CGXE09E1-CD (ENGLISH) CGXS09E1-CD (SPANISH) CGXF09E1-CD (FRENCH) CGXG09E1-CD (GERMAN) CGXI09E1-CD (ITALIAN) RUSSIA:N/A	LUBRICANTS (M261-00-041-12500-01)	Attached sheet 18A
		SPECIAL TOOL (M261-00-061-13002-01)	Attached sheet 19
		FRONT AXLE HUB ASSEMBLY REMOVAL AND INSTALLATION (M261-00-171-33402-01)	Attached sheet 20, 29
		DRIVESHAFT ASSEMBLY REMOVAL AND INSTALLATION (M261-00-351-39202-01)	Attached sheet 21, 29
2010 OUTLANDER Workshop Manual	CGXE10E1-CD (ENGLISH) CGXS10E1-CD (SPANISH) CGXF10E1-CD (FRENCH) CGXG10E1-CD (GERMAN) CGXI10E1-CD (ITALIAN) RUSSIA:N/A	LUBRICANTS (M261-00-041-42600-01)	Attached sheet 18A
		SPECIAL TOOL (M261-00-061-13002-01)	Attached sheet 19
		FRONT AXLE HUB ASSEMBLY REMOVAL AND INSTALLATION (M261-00-171-33403-01)	Attached sheet 20, 29
		DRIVESHAFT ASSEMBLY REMOVAL AND INSTALLATION (M261-00-351-88600-01)	Attached sheet 21, 29
2011 OUTLANDER Workshop Manual	CGXE11E1-CD (ENGLISH) CGXS11E1-CD (SPANISH) CGXF11E1-CD (FRENCH) CGXG11E1-CD (GERMAN) CGXI11E1-CD (ITALIAN) RUSSIA:N/A	LUBRICANTS (M261-00-041-64200-01)	Attached sheet 18A
		SPECIAL TOOL (M261-00-061-70900-01)	Attached sheet 19
		FRONT AXLE HUB ASSEMBLY REMOVAL AND INSTALLATION (M261-00-171-33403-01)	Attached sheet 20, 29
		DRIVESHAFT ASSEMBLY REMOVAL AND INSTALLATION (M261-00-352-19100-01)	Attached sheet 21, 29
2012 OUTLANDER Workshop Manual	CGXE12E1-CD (ENGLISH) CGXS12E1-CD (SPANISH) CGXF12E1-CD (FRENCH) CGXG12E1-CD (GERMAN) CGXI12E1-CD (ITALIAN) RUSSIA:N/A	LUBRICANTS (M261-00-041-64200-01)	Attached sheet 18A
		SPECIAL TOOL (M261-00-061-70900-01)	Attached sheet 19
		FRONT AXLE HUB ASSEMBLY REMOVAL AND INSTALLATION (M261-00-171-33403-01)	Attached sheet 20, 29
		DRIVESHAFT ASSEMBLY REMOVAL AND INSTALLATION (M261-00-352-19100-01)	Attached sheet 21, 29

(GENERAL EXPORT/GCC/AUSTRALIA/NEW ZEALAND)

Applicable manual	Pub. No.	Applicable title (INFO ID)	Contents
2006 OUTLANDER Workshop Manual	PWRE0503R MMAL/NZ:DRAFT	LUBRICANTS (M261-00-040-75700-01)	Attached sheet 18A
		SPECIAL TOOL (M261-00-060-81400-01)	Attached sheet 19
		FRONT AXLE HUB ASSEMBLY REMOVAL AND INSTALLATION (M261-00-170-77300-01)	Attached sheet 20, 29
		DRIVESHAFT ASSEMBLY REMOVAL AND INSTALLATION (M261-00-350-87200-01)	Attached sheet 22, 29
2007 OUTLANDER Workshop Manual	<GENERAL EXPORT GCC> PWRE0607R <NEW ZEALAND> DRAFT <AUSTRALIA> MR936083	LUBRICANTS (M261-00-040-92800-01)	Attached sheet 18A
		SPECIAL TOOL (M261-00-061-04400-01)	Attached sheet 19
		FRONT AXLE HUB ASSEMBLY REMOVAL AND INSTALLATION (M261-00-171-10700-01)	Attached sheet 20, 29
		DRIVESHAFT ASSEMBLY REMOVAL AND INSTALLATION (M261-00-351-17600-01)	Attached sheet 22, 29
2008 OUTLANDER Workshop Manual <GENERAL EXPORT (JAPAN SPEC)>	PWRE0712R MMAL:MR936474 NZ:DRAFT	LUBRICANTS (M261-00-041-22200-01)	Attached sheet 18A
		SPECIAL TOOL (M261-00-061-13001-01)	Attached sheet 19
		FRONT AXLE HUB ASSEMBLY REMOVAL AND INSTALLATION (M261-00-171-40801-01)	Attached sheet 20, 29
		DRIVESHAFT ASSEMBLY REMOVAL AND INSTALLATION (M261-00-351-53000-01)	Attached sheet 22, 29

Applicable manual	Pub. No.	Applicable title (INFO ID)	Contents
2008 OUTLANDER Workshop Manual <GENERAL EXPORT, GCC>	PWRE0707R (ENGLISH) PWRS0708R (SPANISH) MR936474:MMAL NZ:DRAFT	LUBRICANTS (M261-00-041-09500-01)	Attached sheet 18A
		SPECIAL TOOL (M261-00-061-13000-01)	Attached sheet 19
		FRONT AXLE HUB ASSEMBLY REMOVAL AND INSTALLATION (M261-00-171-29300-01)	Attached sheet 20, 29
		DRIVESHAFT ASSEMBLY REMOVAL AND INSTALLATION (M261-00-351-37000-01)	Attached sheet 22, 29
2008 OUTLANDER Workshop Manual <AUSTRALIA, NEW ZEALAND>	<NEW ZEALAND> DRAFT <AUSTRALIA> MR936474	LUBRICANTS (M261-00-041-17000-01)	Attached sheet 18A
		SPECIAL TOOL (M261-00-061-13002-01)	Attached sheet 19
		FRONT AXLE HUB ASSEMBLY REMOVAL AND INSTALLATION (M261-00-171-40801-01)	Attached sheet 20, 29
		DRIVESHAFT ASSEMBLY REMOVAL AND INSTALLATION (M261-00-351-39202-01)	Attached sheet 22, 29
2009 OUTLANDER Workshop Manual	<GENERAL EXPORT, GCC> PWRE0810R (ENGLISH) PWRS0811R (SPANISH) <NEW ZEALAND> DRAFT <AUSTRALIA> MR936477	LUBRICANTS (M261-00-041-17001-01)	Attached sheet 18A
		SPECIAL TOOL (M261-00-061-13002-01)	Attached sheet 19
		FRONT AXLE HUB ASSEMBLY REMOVAL AND INSTALLATION (M261-00-171-40801-01)	Attached sheet 20, 29
		DRIVESHAFT ASSEMBLY REMOVAL AND INSTALLATION (M261-00-351-39202-01)	Attached sheet 22, 29
2010 OUTLANDER Workshop Manual	<GENERAL EXPORT, GCC> PWRE0906R (ENGLISH) PWRS0907R (SPANISH) <NEW ZEALAND> DRAFT <AUSTRALIA> MR936925	LUBRICANTS (M261-00-041-17002-01)	Attached sheet 18A
		SPECIAL TOOL (M261-00-061-13002-01)	Attached sheet 19
		FRONT AXLE HUB ASSEMBLY REMOVAL AND INSTALLATION (M261-00-171-64600-01)	Attached sheet 20, 29
		DRIVESHAFT ASSEMBLY REMOVAL AND INSTALLATION (M261-00-351-87500-01)	Attached sheet 22, 29
2011 OUTLANDER Workshop Manual	<GENERAL EXPORT,GCC> PWRE1012R (ENGLISH) PWRS1013R (SPANISH) <NEW ZEALAND> DRAFT <AUSTRALIA> AU900052	LUBRICANTS (M261-00-041-17002-01)	Attached sheet 18A
		SPECIAL TOOL (M261-00-061-13002-01)	Attached sheet 19
		FRONT AXLE HUB ASSEMBLY REMOVAL AND INSTALLATION (M261-00-171-64600-01)	Attached sheet 20, 29
		DRIVESHAFT ASSEMBLY REMOVAL AND INSTALLATION (M261-00-351-87500-01)	Attached sheet 22, 29
2012 OUTLANDER Workshop Manual	<GENERAL EXPORT, GCC > PWRE1103R (ENGLISH) PWRS1104R (SPANISH) <NEW ZEALAND> DRAFT <AUSTRALIA> AU900211	LUBRICANTS (M261-00-041-17002-01)	Attached sheet 18A
		SPECIAL TOOL (M261-00-061-13002-01)	Attached sheet 19
		FRONT AXLE HUB ASSEMBLY REMOVAL AND INSTALLATION (M261-00-171-64600-01)	Attached sheet 20, 29
		DRIVESHAFT ASSEMBLY REMOVAL AND INSTALLATION (M261-00-351-87500-01)	Attached sheet 22, 29

PEUGEOT 4007/CITROEN C-CROSSER

(EUROPE/RUSSIA)

Applicable manual	Pub. No.	Applicable title (INFO ID)	Contents
2008 4007/C-CROSSER Workshop Manual	N/A	LUBRICANTS (M261-00-040-88701-01)	Attached sheet 18A
		SPECIAL TOOL (M261-00-061-32300-01)	Attached sheet 19
		FRONT AXLE HUB ASSEMBLY REMOVAL AND INSTALLATION (M261-00-171-41900-01)	Attached sheet 20, 29
		DRIVESHAFT ASSEMBLY REMOVAL AND INSTALLATION (M261-00-351-48800-01)	Attached sheet 23, 29
2009 4007/C-CROSSER Workshop Manual	N/A	LUBRICANTS (M261-00-041-19200-01)	Attached sheet 18A
		SPECIAL TOOL (M261-00-061-32301-01)	Attached sheet 19
		FRONT AXLE HUB ASSEMBLY REMOVAL AND INSTALLATION (M261-00-171-41901-01)	Attached sheet 20, 29
		DRIVESHAFT ASSEMBLY REMOVAL AND INSTALLATION (M261-00-351-48801-01)	Attached sheet 23, 29
2010 4007/C-CROSSER Workshop Manual	N/A	LUBRICANTS (M261-00-041-19200-01)	Attached sheet 18A
		SPECIAL TOOL (M261-00-061-32301-01)	Attached sheet 19
		FRONT AXLE HUB ASSEMBLY REMOVAL AND INSTALLATION (M261-00-171-41902-01)	Attached sheet 20, 29
		DRIVESHAFT ASSEMBLY REMOVAL AND INSTALLATION (M261-00-351-94900-01)	Attached sheet 23, 29

Attached sheet 2 (5/7)

DELICA D:5

(GENERAL EXPORT)

Applicable manual	Pub. No.	Applicable title (INFO ID)	Contents
2007 DELICA D:5 Workshop Manual	PWRE0711R	LUBRICANTS (M261-00-041-04000-01)	Attached sheet 18B
		SPECIAL TOOL (M261-00-061-23700-01)	Attached sheet 19
		FRONT AXLE HUB ASSEMBLY REMOVAL AND INSTALLATION (M261-00-171-18501-01)	Attached sheet 20, 29
		DRIVESHAFT ASSEMBLY REMOVAL AND INSTALLATION (M261-00-351-32500-01)	Attached sheet 24, 29
2009 DELICA D:5 Workshop Manual	PWRE0804R	LUBRICANTS (M261-00-041-04001-01)	Attached sheet 18B
		SPECIAL TOOL (M261-00-061-23700-01)	Attached sheet 19
		FRONT AXLE HUB ASSEMBLY REMOVAL AND INSTALLATION (M261-00-171-18502-01)	Attached sheet 20, 29
		DRIVESHAFT ASSEMBLY REMOVAL AND INSTALLATION (M261-00-351-32501-01)	Attached sheet 24, 29

ASX/OUTLANDER SPORT

(EUROPE/RUSSIA)

Applicable manual	Pub. No.	Applicable title (INFO ID)	Contents
2011 ASX Workshop Manual	CGWE11E2-CD (ENGLISH) CGWS11E2-CD (SPANISH) CGWF11E2-CD (FRENCH) CGWG11E2-CD (GERMAN) CGWI11E2-CD (ITALIAN) RUSSIA:N/A	LUBRICANTS (M261-00-041-54500-01)	Attached sheet 18C
		SPECIAL TOOL (M261-00-061-59400-01)	Attached sheet 19
		FRONT AXLE HUB ASSEMBLY REMOVAL AND INSTALLATION (M261-00-171-77600-01)	Attached sheet 20, 29
		DRIVESHAFT ASSEMBLY REMOVAL AND INSTALLATION (M261-00-352-05000-01)	Attached sheet 25, 29
2012 ASX Workshop Manual	CGWE12E1-CD (ENGLISH) CGWS12E1-CD (SPANISH) CGWF12E1-CD (FRENCH) CGWG12E1-CD (GERMAN) CGWI12E1-CD (ITALIAN) RUSSIA:N/A	LUBRICANTS (M261-00-041-61900-01)	Attached sheet 18C
		SPECIAL TOOL (M261-00-061-59400-01)	Attached sheet 19
		FRONT AXLE HUB ASSEMBLY REMOVAL AND INSTALLATION (M261-00-171-77600-01)	Attached sheet 20, 29
		DRIVESHAFT ASSEMBLY REMOVAL AND INSTALLATION (M261-00-352-26500-01)	Attached sheet 25, 29

(GENERAL EXPORT/GCC/AUSTRALIA/NEW ZEALAND)

Applicable manual	Pub. No.	Applicable title (INFO ID)	Contents
2011 ASX/OUTLANDER SPORT Workshop Manual	PWPE1006R (ENGLISH) PWPS1007R (SPANISH) MMAL/NZ:DRAFT	LUBRICANTS (M261-00-041-54500-01)	Attached sheet 18C
		SPECIAL TOOL (M261-00-061-65700-01)	Attached sheet 19
		FRONT AXLE HUB ASSEMBLY REMOVAL AND INSTALLATION (M261-00-171-85100-01)	Attached sheet 20, 29
		DRIVESHAFT ASSEMBLY REMOVAL AND INSTALLATION (M261-00-352-12400-01)	Attached sheet 26, 29
2012 ASX/OUTLANDER SPORT Workshop Manual	PWPE1107R (ENGLISH) PWPS1108R (SPANISH) MMAL/NZ:DRAFT	LUBRICANTS (M261-00-041-54500-01)	Attached sheet 18C
		SPECIAL TOOL (M261-00-061-65700-01)	Attached sheet 19
		FRONT AXLE HUB ASSEMBLY REMOVAL AND INSTALLATION (M261-00-171-85100-01)	Attached sheet 20, 29
		DRIVESHAFT ASSEMBLY REMOVAL AND INSTALLATION (M261-00-352-12400-01)	Attached sheet 26, 29

LANCER/LANCER EX/LANCER SPORTBACK

(EUROPE/RUSSIA)

Applicable manual	Pub. No.	Applicable title (INFO ID)	Contents
2008 LANCER Workshop Manual	CG1E08E2-CD (ENGLISH) CG1F08E2-CD (FRENCH) CG1G08E2-CD (GERMAN) CG1S08E2-CD (SPANISH) RUSSIA:N/A	LUBRICANTS (M261-00-041-00600-01)	Attached sheet 18D
		SPECIAL TOOL (M261-00-061-03300-01)	Attached sheet 19
		FRONT AXLE HUB ASSEMBLY REMOVAL AND INSTALLATION (M261-00-171-07700-01)	Attached sheet 20, 29
		DRIVESHAFT ASSEMBLY REMOVAL AND INSTALLATION (M261-00-351-13200-01)	Attached sheet 27, 29
2009 LANCER SPORTBACK Workshop Manual	CG4E09E1-CD (ENGLISH) CG4F09E1-CD (FRENCH) CG4G09E1-CD (GERMAN) CG4S09E1-CD (SPANISH) CG4I09E1-CD (ITALIAN) RUSSIA:N/A	LUBRICANTS (M261-00-041-27700-01)	Attached sheet 18D
		SPECIAL TOOL (M261-00-061-13000-01)	Attached sheet 19
		FRONT AXLE HUB ASSEMBLY REMOVAL AND INSTALLATION (M261-00-171-07700-01)	Attached sheet 20, 29
		DRIVESHAFT ASSEMBLY REMOVAL AND INSTALLATION (M261-00-351-13200-01)	Attached sheet 27, 29
2011 LANCER/ LANCER SPORTBACK Workshop Manual	CG1E11E1-CD (ENGLISH) CG1F11E1-CD (FRENCH) CG1G11E1-CD (GERMAN) CG1S11E1-CD (SPANISH) CG1I11E1-CD (ITALIAN) RUSSIA:N/A	LUBRICANTS (M261-00-041-63100-01)	Attached sheet 18D
		SPECIAL TOOL (M261-00-061-13002-01)	Attached sheet 19
		FRONT AXLE HUB ASSEMBLY REMOVAL AND INSTALLATION (M261-00-171-33402-01)	Attached sheet 20, 29
		DRIVESHAFT ASSEMBLY REMOVAL AND INSTALLATION (M261-00-351-39202-01)	Attached sheet 27, 29

Attached sheet 2 (6/7)

Applicable manual	Pub. No.	Applicable title (INFO ID)	Contents
2012 LANCER/ LANCER SPORTBACK Workshop Manual	CG1E12E1-CD (ENGLISH) CG1F12E1-CD (FRENCH) CG1G12E1-CD (GERMAN) CG1S12E1-CD (SPANISH) CG1I12E1-CD (ITALIAN) RUSSIA:N/A	LUBRICANTS (M261-00-041-81300-01)	Attached sheet 18D
		SPECIAL TOOL (M261-00-061-13002-01)	Attached sheet 19
		FRONT AXLE HUB ASSEMBLY REMOVAL AND INSTALLATION (M261-00-171-33403-01)	Attached sheet 20, 29
		DRIVESHAFT ASSEMBLY REMOVAL AND INSTALLATION (M261-00-351-85300-01)	Attached sheet 27, 29

(AUSTRALIA/NEW ZEALAND)

Applicable manual	Pub. No.	Applicable title (INFO ID)	Contents
2008 LANCER Workshop Manual	AUSTRALIA: AU900211 NEW ZEALAND:DRAFT	LUBRICANTS (M261-00-041-01701-01)	Attached sheet 18D
		SPECIAL TOOL (M261-00-060-81400-01)	Attached sheet 19
		FRONT AXLE HUB ASSEMBLY REMOVAL AND INSTALLATION (M261-00-171-30100-01)	Attached sheet 20, 29
		DRIVESHAFT ASSEMBLY REMOVAL AND INSTALLATION (M261-00-351-40000-01)	Attached sheet 27, 29
2009 LANCER Workshop Manual	AUSTRALIA:MR936503 NEW ZEALAND:DRAFT	LUBRICANTS (M261-00-041-28800-01)	Attached sheet 18D
		SPECIAL TOOL (M261-00-061-45300-01)	Attached sheet 19
		FRONT AXLE HUB ASSEMBLY REMOVAL AND INSTALLATION (M261-00-171-49701-01)	Attached sheet 20, 29
		DRIVESHAFT ASSEMBLY REMOVAL AND INSTALLATION (M261-00-351-64800-01)	Attached sheet 27, 29
2009 LANCER SPORTBACK Work shop Manual	AUSTRALIA:MR936570 NEW ZEALAND:DRAFT	LUBRICANTS (M261-00-041-32900-01)	Attached sheet 18D
		SPECIAL TOOL (M261-00-061-45301-01)	Attached sheet 19
		FRONT AXLE HUB ASSEMBLY REMOVAL AND INSTALLATION (M261-00-171-49700-01)	Attached sheet 20, 29
		DRIVESHAFT ASSEMBLY REMOVAL AND INSTALLATION (M261-00-351-73400-01)	Attached sheet 27, 29
2010 LANCER Workshop Manual	AUSTRALIA:MR936920 NEW ZEALAND:DRAFT	LUBRICANTS (M261-00-041-28800-01)	Attached sheet 18D
		SPECIAL TOOL (M261-00-061-45300-01)	Attached sheet 19
		FRONT AXLE HUB ASSEMBLY REMOVAL AND INSTALLATION (M261-00-171-70900-01)	Attached sheet 20, 29
		DRIVESHAFT ASSEMBLY REMOVAL AND INSTALLATION (M261-00-351-64801-01)	Attached sheet 27, 29
2010 LANCER SPORTBACK Work shop Manual	AUSTRALIA:MR936922 NEW ZEALAND:DRAFT	LUBRICANTS (M261-00-041-32900-01)	Attached sheet 18D
		SPECIAL TOOL (M261-00-061-45301-01)	Attached sheet 19
		FRONT AXLE HUB ASSEMBLY REMOVAL AND INSTALLATION (M261-00-171-70900-01)	Attached sheet 20, 29
		DRIVESHAFT ASSEMBLY REMOVAL AND INSTALLATION (M261-00-351-64801-01)	Attached sheet 27, 29
2011 LANCER Workshop Manual	AUSTRALIA:AU900048 NEW ZEALAND:DRAFT	LUBRICANTS (M261-00-041-28800-01)	Attached sheet 18D
		SPECIAL TOOL (M261-00-061-45300-01)	Attached sheet 19
		FRONT AXLE HUB ASSEMBLY REMOVAL AND INSTALLATION (M261-00-171-70900-01)	Attached sheet 20, 29
		DRIVESHAFT ASSEMBLY REMOVAL AND INSTALLATION (M261-00-351-64801-01)	Attached sheet 27, 29
2011 LANCER SPORTBACK Work shop Manual	AUSTRALIA:AU900050 NEW ZEALAND:DRAFT	LUBRICANTS (M261-00-041-32900-01)	Attached sheet 18D
		SPECIAL TOOL (M261-00-061-45301-01)	Attached sheet 19
		FRONT AXLE HUB ASSEMBLY REMOVAL AND INSTALLATION (M261-00-171-70900-01)	Attached sheet 20, 29
		DRIVESHAFT ASSEMBLY REMOVAL AND INSTALLATION (M261-00-351-64801-01)	Attached sheet 27, 29
2012 LANCER Workshop Manual	AUSTRALIA:AU900216 NEW ZEALAND:DRAFT	LUBRICANTS (M261-00-041-28800-01)	Attached sheet 18D
		SPECIAL TOOL (M261-00-061-45300-01)	Attached sheet 19
		FRONT AXLE HUB ASSEMBLY REMOVAL AND INSTALLATION (M261-00-171-70900-01)	Attached sheet 20, 29
		DRIVESHAFT ASSEMBLY REMOVAL AND INSTALLATION (M261-00-351-64801-01)	Attached sheet 27, 29
2012 LANCER SPORTBACK Work shop Manual	AUSTRALIA:AU900217 NEW ZEALAND:DRAFT	LUBRICANTS (M261-00-041-32900-01)	Attached sheet 18D
		SPECIAL TOOL (M261-00-061-45301-01)	Attached sheet 19
		FRONT AXLE HUB ASSEMBLY REMOVAL AND INSTALLATION (M261-00-171-70900-01)	Attached sheet 20, 29
		DRIVESHAFT ASSEMBLY REMOVAL AND INSTALLATION (M261-00-351-64801-01)	Attached sheet 27, 29

(GENERAL EXPORT/GCC)

Applicable manual	Pub. No.	Applicable title (INFO ID)	Contents
2008 LANCER/ LANCER EX Workshop Manual	PWME0701R (ENG) PWMS0702R (SPA)	LUBRICANTS (M261-00-041-32900-01)	Attached sheet 18D
		SPECIAL TOOL (M261-00-061-12900-01)	Attached sheet 19
		FRONT AXLE HUB ASSEMBLY REMOVAL AND INSTALLATION (M261-00-171-12900-01)	Attached sheet 20, 29
		DRIVESHAFT ASSEMBLY REMOVAL AND INSTALLATION (M261-00-351-18700-01)	Attached sheet 28, 29
2009 LANCER/ LANCER EX Work shop Manual	PWME0802R (ENG) PWMS0803R (SPA)	LUBRICANTS (M261-00-041-32901-01)	Attached sheet 18D
		SPECIAL TOOL (M261-00-061-12901-01)	Attached sheet 19
		FRONT AXLE HUB ASSEMBLY REMOVAL AND INSTALLATION (M261-00-171-12901-01)	Attached sheet 20, 29
		DRIVESHAFT ASSEMBLY REMOVAL AND INSTALLATION (M261-00-351-18701-01)	Attached sheet 28, 29
2010 LANCER/ LANCER EX Workshop Manual	PWME0901R (ENG) PWMS0902R (SPA)	LUBRICANTS (M261-00-041-32901-01)	Attached sheet 18D
		SPECIAL TOOL (M261-00-061-12901-01)	Attached sheet 19
		FRONT AXLE HUB ASSEMBLY REMOVAL AND INSTALLATION (M261-00-171-12902-01)	Attached sheet 20, 29
		DRIVESHAFT ASSEMBLY REMOVAL AND INSTALLATION (M261-00-351-18702-01)	Attached sheet 28, 29
2011 LANCER/ LANCER EX Workshop Manual	PWME1010R (ENG) PWMS1011R (SPA)	LUBRICANTS (M261-00-041-32901-01)	Attached sheet 18D
		SPECIAL TOOL (M261-00-061-12901-01)	Attached sheet 19
		FRONT AXLE HUB ASSEMBLY REMOVAL AND INSTALLATION (M261-00-171-12902-01)	Attached sheet 20, 29
		DRIVESHAFT ASSEMBLY REMOVAL AND INSTALLATION (M261-00-351-18702-01)	Attached sheet 28, 29
2012 LANCER/ LANCER EX Workshop Manual	PWME1111R (ENG) PWMS1112R (SPA)	LUBRICANTS (M261-00-041-32901-01)	Attached sheet 18D
		SPECIAL TOOL (M261-00-061-12901-01)	Attached sheet 19
		FRONT AXLE HUB ASSEMBLY REMOVAL AND INSTALLATION (M261-00-171-12902-01)	Attached sheet 20, 29
		DRIVESHAFT ASSEMBLY REMOVAL AND INSTALLATION (M261-00-351-18702-01)	Attached sheet 28, 29

(CHINA)

Applicable manual	Pub. No.	Applicable title (INFO ID)	Contents
2009 LANCER EX Workshop Manual	N/A	LUBRICANTS (M261-00-041-30700-01)	Attached sheet 18D
		SPECIAL TOOL (M261-00-061-12901-01)	Attached sheet 19
		FRONT AXLE HUB ASSEMBLY REMOVAL AND INSTALLATION (M261-00-171-52700-01)	Attached sheet 20, 29
		DRIVESHAFT ASSEMBLY REMOVAL AND INSTALLATION (M261-00-351-68200-01)	Attached sheet 28, 29

A

LUBRICANTS

Item	Specified lubricant			Quantity
Inside of knuckle bore	Dowcorning/Molykote BR2 Plus or equivalent			As required [1.0 – 1.5 g (0.04 – 0.05 oz)]
PTJ boot grease	Repair kit grease	2.4L Engine -FWD	LH	210 ± 10 g (7.4 ± 0.3 oz)
			RH	225 ± 10 g (7.9 ± 0.3 oz)
		2.4L Engine -AWD	LH	210 ± 10 g (7.4 ± 0.3 oz)
			RH	200 ± 10 g (7.0 ± 0.3 oz)
		3.0L Engine	LH	245 ± 10 g (8.6 ± 0.3 oz)
			RH	255 ± 10 g (9.0 ± 0.3 oz), 250 ± 10 g (8.8 ± 0.3 oz)*
EBJ boot grease	Repair kit grease	2.4L Engine		120 ± 10 g (4.2 ± 0.3 oz)
		3.0L Engine		140 ± 10 g (4.9 ± 0.3 oz), 135 ± 10 g (4.8 ± 0.3 oz)*
Dust seal inner grease	Repair kit grease	2.4L Engine		6 – 10 g (0.2 – 0.3 oz)
		3.0L Engine		8 – 12 g (0.3 – 0.4 oz)
Dust seal outer grease	Repair kit grease			3 – 7 g (0.1 – 0.2 oz)

*NOTE: *Indicates Vehicles with S-AWC.*

B

LUBRICANTS

Item	Specified lubricant					Quantity
Inside of knuckle bore	DOW CORNING TORAY Molykote EP					As required [2.0 g (0.07 oz)]
Inboard joint boot grease	Repair kit grease	FWD	M/T		LH	210 ± 10 g (7.4 ± 0.3 oz)
					RH	185 ± 10 g (6.5 ± 0.3 oz)
			CVT	2.0L Engine	LH	210 ± 10 g (7.4 ± 0.3 oz)
					RH	210 ± 10 g (7.4 ± 0.3 oz)
				2.4L Engine	LH	220 ± 10 g (7.8 ± 0.3 oz)
					RH	235 ± 10 g (8.3 ± 0.3 oz)
		AWD		2.0L Engine	LH	200 ± 10 g (7.1 ± 0.3 oz)
					RH	210 ± 10 g (7.4 ± 0.3 oz)
				2.4L Engine	LH	220 ± 10 g (7.8 ± 0.3 oz)
					RH	200 ± 10 g (7.1 ± 0.3 oz)
Outboard joint boot grease	Repair kit grease					120 ± 10 g (4.2 ± 0.3 oz)

<Added>

Connection between the drive shaft assembly and the wheel bearing	Shell Alvania Grease HDX or Dowcorning/Molykote BR2 Plus	As required [About 1.0 – 1.5 g (0.04 – 0.05 oz)]

C

LUBRICANTS

Item	Specified lubricant			Quantity
Inside of knuckle bore	Dowcorning/Molykote BR2 Plus or equivalent			As required {1.0 – 1.5 g (0.03 – 0.05 oz)}
Inboard joint grease	Repair kit grease	M/T	LH	120 ± 10 g (4.2 ± 0.3 oz)
			RH	130 ± 10 g (4.6 ± 0.3 oz)
		CVT	LH	120 ± 10 g (4.2 ± 0.3 oz)
			RH	200 ± 10 g (7.0 ± 0.3 oz)
Outboard joint boot grease	Repair kit grease	ALL		105 ± 10 g (3.7 ± 0.3 oz)

<Added>

Connection between the drive shaft assembly and the wheel bearing	Shell Alvania Grease HDX or Dowcorning/Molykote BR2 Plus	As required [About 1.0 – 1.5 g (0.04 – 0.05 oz)]

Attached sheet 12

Tool	Tool number and name	Supersession	Application
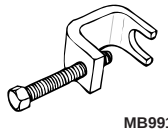 MB991618	MB991618 Hub bolt remover	General service tool	Removal of the hub bolt
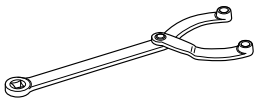 B990767	MB990767 Front hub and flange yoke holder	MB990767-01	Fixing of the hub
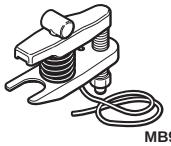 MB991897	MB991897 or MB992011 Ball joint remover	MB991113-01, MB990635-01 or General service tool	Knuckle and tie rod end ball joint disconnection *NOTE: Steering linkage puller (MB990635 or MB991113)is also used to disconnect knuckle and tie rod end ball joint.*
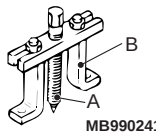 MB990241AD	MB990241 Axle shaft puller A: MB990242 Puller shaft B: MB990244 Puller bar	MB990241-01 or General service tool	• Removal of the hub knuckle assembly • Removal of the driveshaft assembly
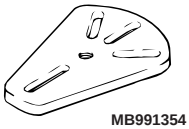 MB991354	MB991354 Puller body	General service tool	
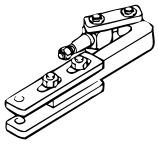	MB991056 or MB991355 Knuckle arm bridge	MB991056-01	Removal of the hub
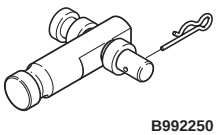 B992250	MB992250 Knuckle arm bridge attachment	–	Removal of the hub *NOTE: Replace this attachment with a guide of MB991355 and use them.*

<Added>

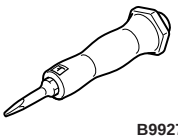 B992700	MB992700 Lock nut chisel	General service tool	Raising up the swaged part driveshaft nut

REMOVAL AND INSTALLATION

⚠ CAUTION

- **The magnetic encoder collects metallic particles easily, because it is magnetized. Make sure that the magnetic encoder should not collect metallic particles. Check that there is not any trouble prior to reassembling it.**
- **When removing and installing the front wheel hub assembly, make sure that the magnetic encoder (integrated with the inner oil seal) does not contact with surrounding parts to avoid damage.**
- **When removing and installing the front wheel speed sensor, make sure that the sensor head at the end does not contact with surrounding parts to avoid damage.**
- **The parts indicated by * are the nuts with friction coefficient stabilizer. Prior to reinstallation, ensure there is no damage, clean dust and soiling from the bearing and thread surfaces, and tighten them to the specified torque.**

Post-installation operation
- Using your fingers, press the Ball Joint Dust Cover to check for a crack or damage.

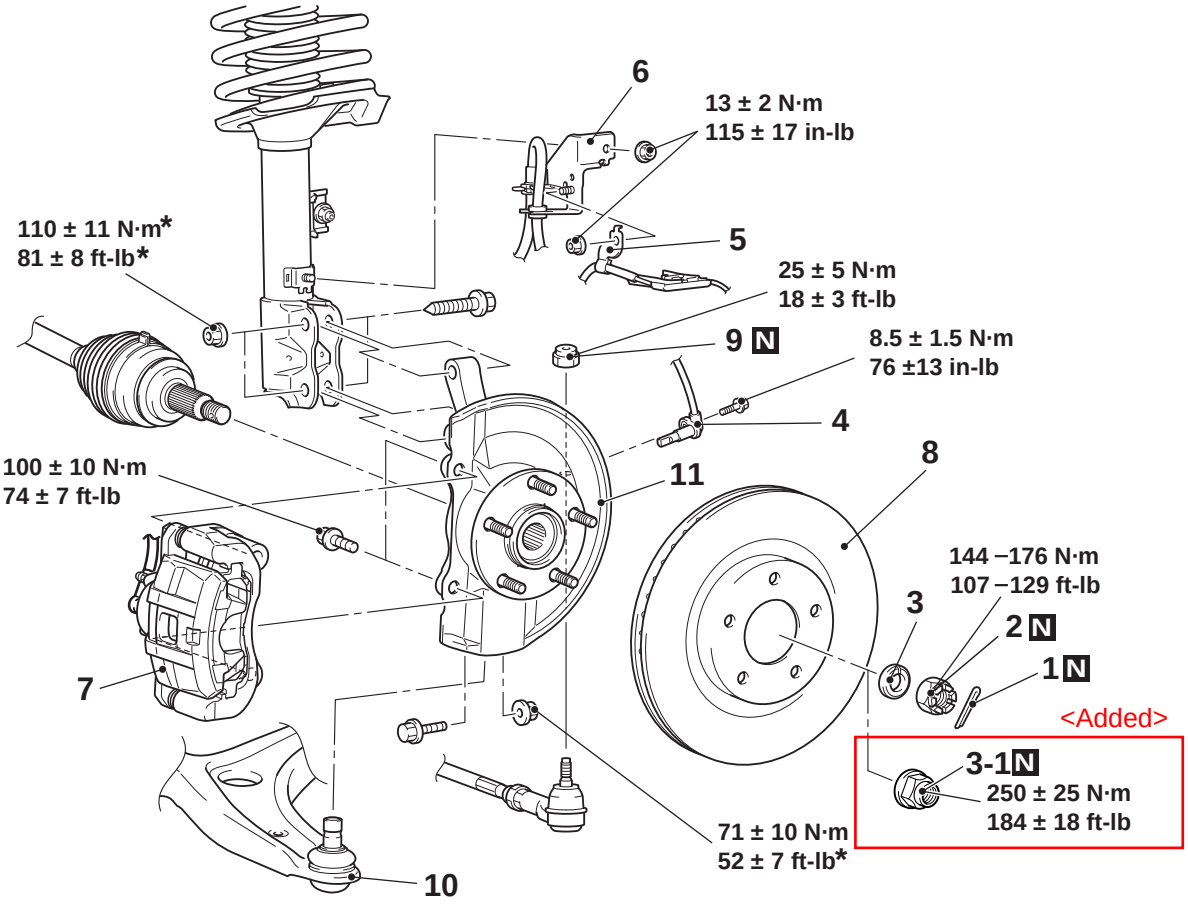

ACF06341AB

Removal steps

<<A>> >>A<< 1. Cotter pin <Castle nut type>
<<A>> >>A<< 2. Driveshaft nut <Castle nut type>
>>A<< 3. Washer <Castle nut type>
<<AA>> >>AA<< 3-1. Driveshaft nut <Flange nut type>

<Added>

Removal steps (Continued)

4. Front wheel speed sensor (Refer to GROUP 35C, Wheel speed sensor removal and installation)
5. Front wheel speed sensor harness clamp
6. Brake hose bracket

Removal steps (Continued)

<<B>> 7. Brake caliper assembly
8. Brake disc
<<C>> 9. Self-locking nut (tie-rod end connection)
10. Flange nut (lower arm ball joint connection)
<<D>> 11. Hub knuckle assembly

Required Special Tools:

- MB990242: Puller Shaft
- MB990244: Puller Bar
- MB990767: Front Hub and Flange Yoke Holder
- MB991354: Puller Body
- MB991897 or MB992011: Ball Joint Remover

REMOVAL SERVICE POINTS

<Added>

<<A>> DRIVESHAFT NUT REMOVAL <CASTLE NUT TYPE>

⚠ CAUTION

Do not apply the vehicle weight on the wheel bearing with the driveshaft nut loosened. Otherwise, the wheel bearing may be broken.

Use special tool MB990767 to counter the hub as shown in the figure to remove the driveshaft nut.

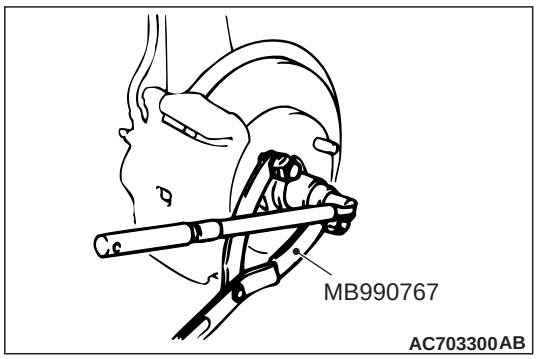

<<B>> BRAKE CALIPER ASSEMBLY REMOVAL

1. Remove the brake caliper assembly with brake hose.
2. Secure the removed brake caliper assembly with a wire or other similar material at a position where it will not interfere with the removal and installation of the hub knuckle assembly.

Insert the attached sheet 17 (1/4)

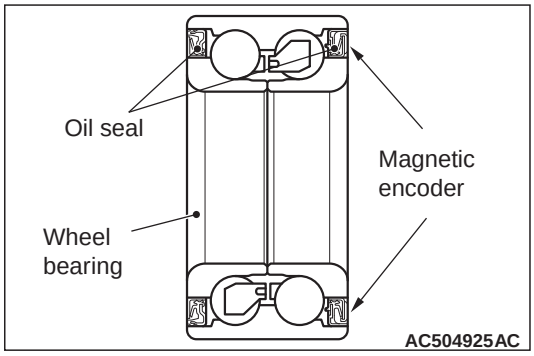

<<D>> HUB KNUCKLE ASSEMBLY REMOVAL

⚠ CAUTION

- **The magnetic encoder collects metallic particles easily, because it is magnetized. Make sure that the magnetic encoder does not collect metallic particles.**
- **When removing the driveshaft, make sure that it does not contact with the magnetic encoder (integrated with the inner oil seal) to avoid damage.**

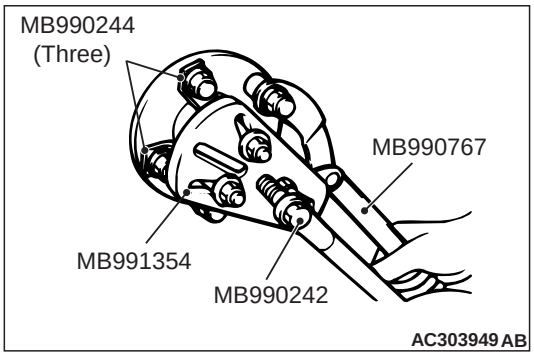

If the driveshaft is seized, use special tools MB990242 and MB990244, MB991354 and MB990767 to push the driveshaft out from the hub.

INSTALLATION SERVICE POINT

Insert the attached sheet 17 (4/4)

>>A<< WASHER/DRIVESHAFT NUT INSTALLATION <CASTLE NUT TYPE>

<Added>

⚠ CAUTION

- **The magnetic encoder collects metallic particles easily, because it is magnetized. Make sure that the magnetic encoder should not collect metallic particles. Check that there is not any trouble prior to reassembling it.**
- **When installing the driveshaft, make sure that it does not contact with the magnetic encoder (integrated with the inner oil seal) to avoid damage.**
- **Do not apply the vehicle weight on the wheel bearing before fully tightening the driveshaft nut. Otherwise, the wheel bearing may be broken.**

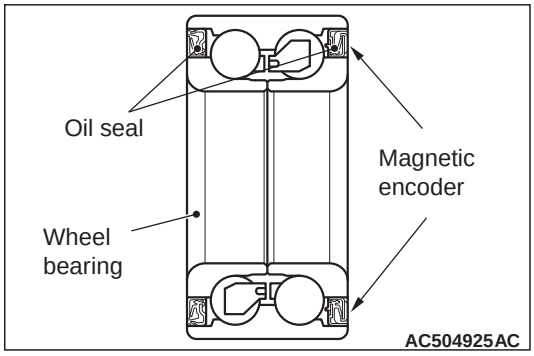

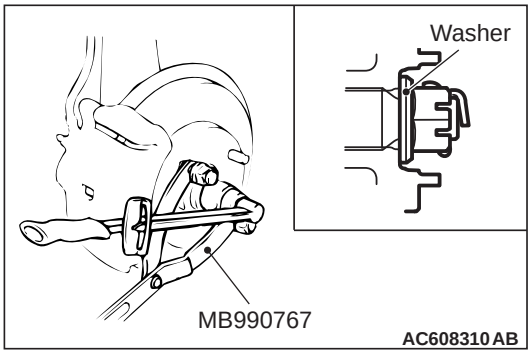

1. Be sure to install the driveshaft washer in the illustrated direction.
2. Using special MB990767, tighten the driveshaft nut. At this time, tighten the nut to the specified lower limit torque so that the pin hole may align with cotter pin.

   Tightening torque: 144 – 176 N·m (107 – 129 ft-lb)
3. If the pin hole does not align with the pin, tighten the driveshaft nut [less than 176 N·m (129 ft-lb)] and find the nearest hole, then fit the cotter pin.

Insert the attached sheet 17 (3/4)

REMOVAL AND INSTALLATION

⚠ CAUTION

- **The magnetic encoder collects metallic particles easily, because it is magnetized. Make sure that the magnetic encoder should not collect metallic particles. Check that there is not any trouble prior to reassembling it.**
- **When removing and installing the driveshaft assembly, make sure that the magnetic encoder (integrated with the inner oil seal) does not contact with surrounding parts to avoid damage.**
- **When removing and installing the front wheel speed sensor, make sure that the sensor head at the end does not contact with surrounding parts to avoid damage.**
- **The parts indicated by * are the nuts with friction coefficient stabilizer. In removal, ensure there is no damage, clean dust and soiling from the bearing and thread surfaces, and tighten them to the specified torque.**

Pre-removal operation	Post-installation operation
• Transmission Fluid Draining (Refer to GROUP 23A, On-vehicle Service, Transmission Fluid Change .)<2.4 L engine> • Automatic Transmission Fluid Draining (Refer to GROUP 23C, On-vehicle Service, Transmission Fluid Change .)<3.0 L engine>	• Using your fingers, press the Ball Joint Dust Cover to check for a crack or damage. • Transmission Fluid Filling (Refer to GROUP 23A, On-vehicle Service, Transmission Fluid Change .)<2.4 L engine> • Automatic Transmission Fluid Filling (Refer to GROUP 23C, On-vehicle Service, Transmission Fluid Change .)<3.0 L engine>

<FWD>

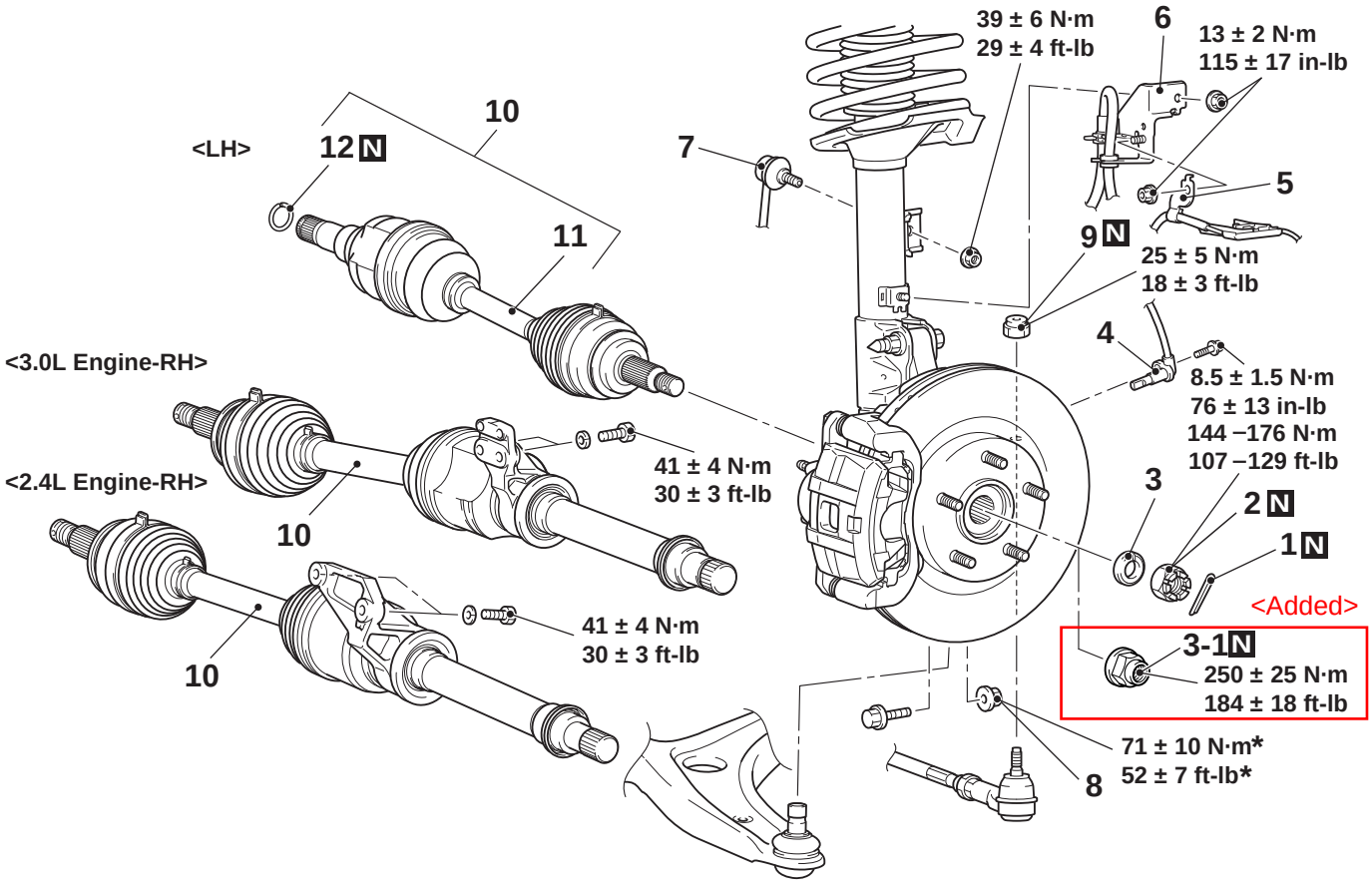

ACF05066AB

Removal steps

1. Cotter pin <Castle nut type>
<<A>> >>C<< 2. Driveshaft nut <Castle nut type>
>>C<< 3. Washer <Castle nut type>
<<AA>> >>BA<< 3-1. Driveshaft nut <Flange nut type>
4. Front wheel speed sensor
5. Front wheel speed sensor harness bracket
6. Brake hose bracket
<<B>> >>B<< 7. Stabilizer link connection

<Added>

Removal steps (Continued)

8. Self-locking nut (lower arm ball joint connection)
<<C>> 9. Self-locking nut (tie-rod end connection)
<<D>> >>A<< 10. Driveshaft assembly
11. Driveshaft
12. Circlip

<AWD>

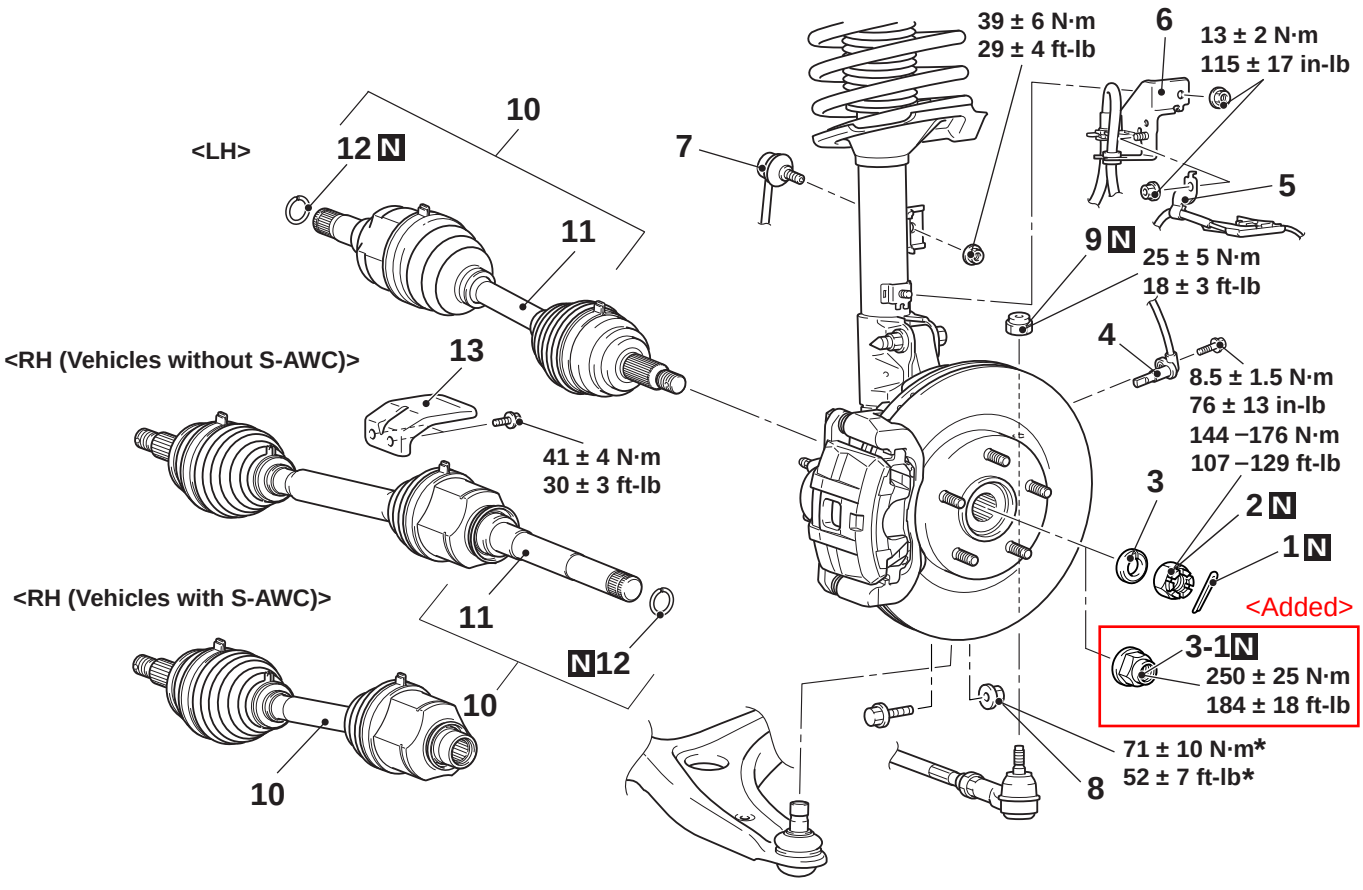

ACF05067AB

Removal steps

1. Cotter pin <Castle nut type>
<<A>> >>C<< 2. Driveshaft nut <Castle nut type>
>>C<< 3. Washer <Castle nut type>
<<AA>> >>BA<< 3-1. Driveshaft nut <Flange nut type>
4. Front wheel speed sensor
5. Front wheel speed sensor harness bracket
6. Brake hose bracket
<<B>> >>B<< 7. Stabilizer link connection
8. Self-locking nut (lower arm ball joint connection)
<<C>> 9. Self-locking nut (tie-rod end connection)

<Added>

Removal steps (Continued)

<<D>> >>A<< 10. Driveshaft assembly
11. Driveshaft
12. Circlip
13. Heat protector <3.0L engine without S-AWC>

Required Special Tools:

- MB990242: Puller Shaft
- MB990244: Puller Bar
- MB990767: Front Hub and Flange Yoke Holder
- MB991000: Spacer
- MB991017: Front Hub Remover and Installer
- MB991354: Puller Body
- MB991897 or MB992011: Ball Joint Remover

REMOVAL SERVICE POINTS

<Added>

<<A>> DRIVESHAFT NUT REMOVAL <CASTLE NUT TYPE>

⚠ CAUTION

Do not apply the vehicle weight on the wheel bearing with the driveshaft nut loosened. Otherwise, the wheel bearing may be broken.

Use special tool MB990767 to counter the hub as shown in the figure to remove the driveshaft nut.

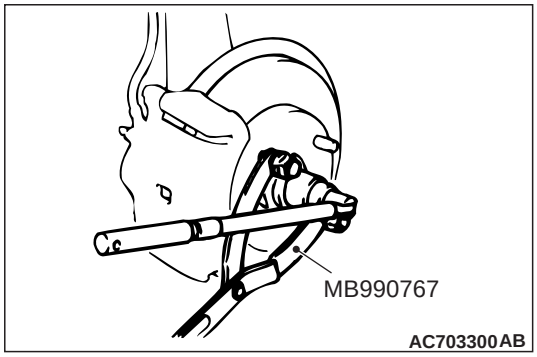

<<B>> STABILIZER LINK DISCONNECTION

Use a hexagon wrench to remove the stabilizer link and strut connection nut as shown in the figure.

Insert the attached sheet 17 (1/4)

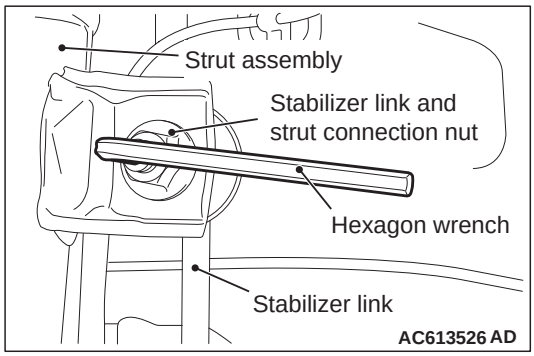

<<C>> SELF-LOCKING NUT (TIE-ROD END CONNECTION) REMOVAL

⚠ CAUTION

- **Loosen the self-locking nut (tie-rod end connection) from the ball joint, but do not remove here. Use the special tool.**
- **To prevent the special tool from dropping off, suspend it with a cord.**

1. Install special tool MB991897 or MB992011, as shown in the figure.

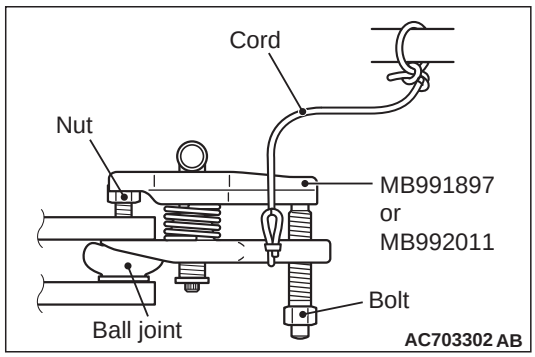

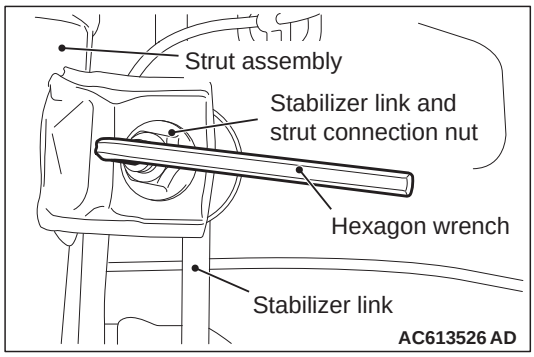

>>B<< STABILIZER LINK CONNECTION

Use a hexagon wrench to install the stabilizer link and strut connection nut as shown in the figure.

Insert the attached sheet 17 (3/4)

>>C<< WASHER/DRIVESHAFT NUT INSTALLATION

<CASTLE NUT TYPE>

⚠ CAUTION <Added>

Do not apply the vehicle weight on the front wheel hub assembly before fully tightening the driveshaft nut. Otherwise, the wheel bearing may be broken.

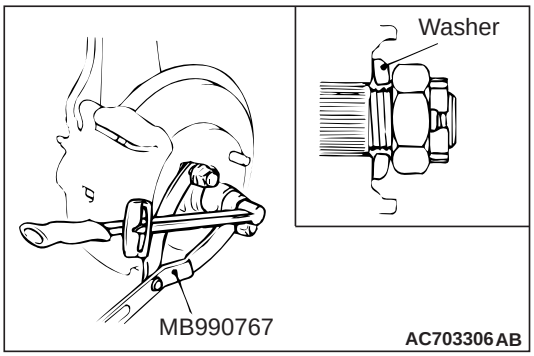

1. Incorporate the driveshaft assembly washer as shown in the illustration.
2. Use special tool MB990767 to tighten the driveshaft nuts. At this time, tighten the nuts within the specified torque range considering the final tightening.

   Tightening torque: 144 – 176 N·m (107 – 129 ft-lb)
3. If the pin holes do not align with the pins, tighten the driveshaft nut [less than 200 N·m(147 ft-lb)] and find the nearest hole then bend the cotter pin to fit it.

Insert the attached sheet 17 (4/4)

REMOVAL AND INSTALLATION

⚠ CAUTION

- **The magnetic encoder collects metallic particles easily, because it is magnetized. Make sure that the magnetic encoder should not collect metallic particles. Check that there is not any trouble prior to reassembling it.**
- **When removing and installing the driveshaft assembly, make sure that the magnetic encoder (integrated with the inner oil seal) does not contact with surrounding parts to avoid damage.**
- **When removing and installing the front wheel speed sensor, make sure that the sensor head at the end does not contact with surrounding parts to avoid damage.**
- **The parts indicated by * are the nuts with friction coefficient stabilizer. Prior to reinstallation, ensure there is no damage, clean dust and soiling from the bearing and thread surfaces, and tighten them to the specified torque.**

Pre-removal operation	Post-installation operation
• Engine Room Side Cover Removal (Refer to GROUP 51 - Under Cover Removal and Installation .) • Transmission Fluid Draining (Refer to GROUP 22A - On-vehicle Service, Transmission Oil Change .) <M/T> • CVT Fluid Draining (Refer to GROUP 23A - On-vehicle Service, CVT Fluid Change .) <CVT>	• Using Your Fingers, Press The Ball Joint Dust Cover to Check for A Crack or Damage. • Transmission Fluid Refilling (Refer to GROUP 22A - On-vehicle Service, Transmission Oil Change .) <M/T> • CVT Fluid Refilling (Refer to GROUP 23A - On-vehicle Service, CVT Fluid Change .) <CVT> • Engine Room Side Cover Installation (Refer to GROUP 51 - Under Cover Removal and Installation .)

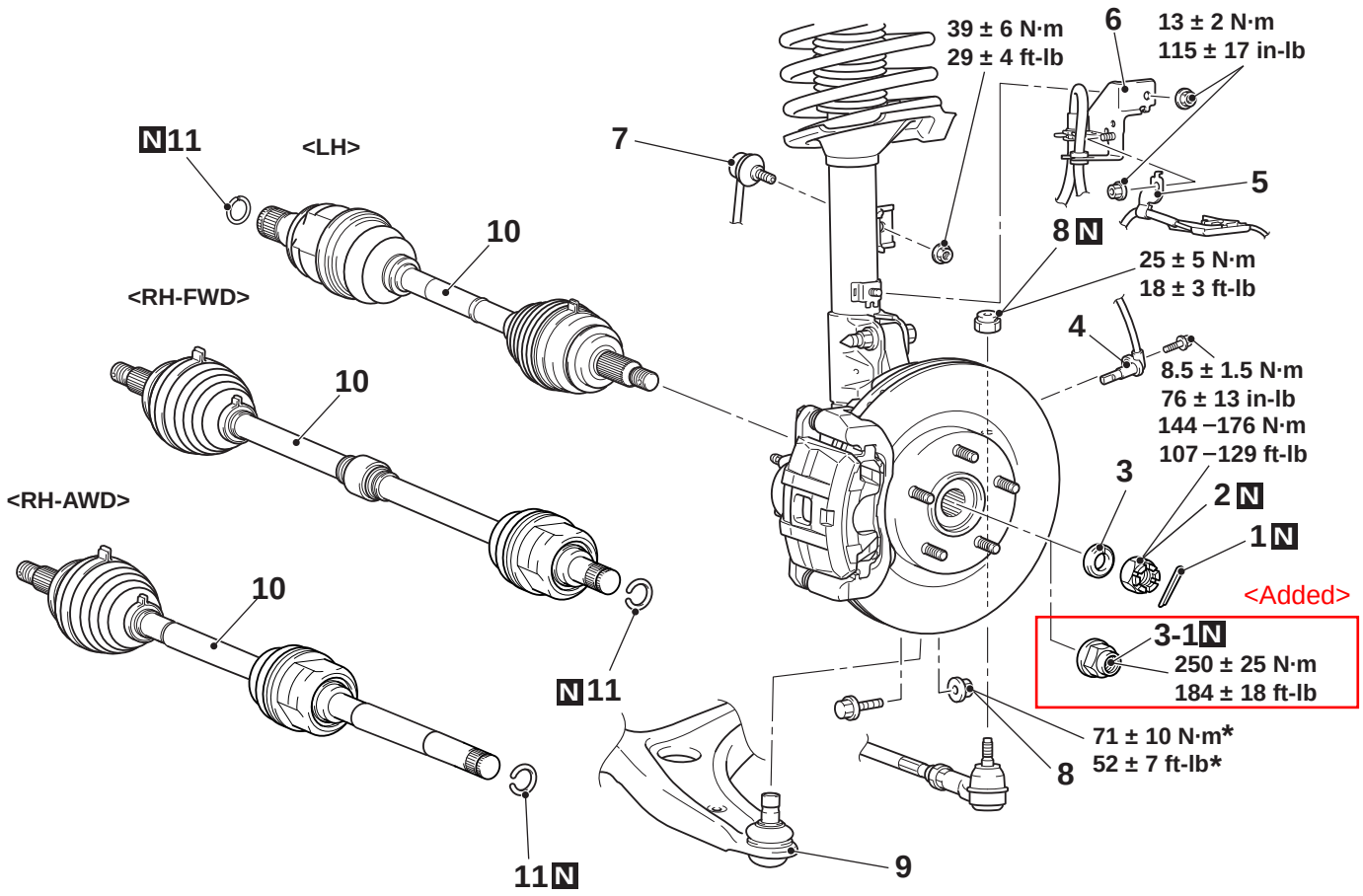

ACF05068AB

Removal steps

<<A>> >>C<< 1. Cotter pin <Castle nut type>

<<A>> >>C<< 2. Driveshaft nut <Castle nut type>

>>C<< 3. Washer <Castle nut type>

<<AA>> >>BA<< 3-1. Driveshaft nut <Flange nut type>

4. Front wheel speed sensor (Refer to GROUP 35C – Wheel speed sensor)
5. Front wheel speed sensor harness bracket

Removal steps (Continued)

<<B>> >>B<< 6. Brake hose bracket
7. Stabilizer link connection
8. Self-locking nut (tie-rod end connection)
9. Lower arm ball joint connection

<<C>> <Added>

<<D>> >>A<< 10. Driveshaft assembly
11. Circlip

Required Special Tools:

- MB990242: Puller Shaft
- MB990244: Puller Bar
- MB990767: Front Hub and Flange Yoke Holder
- MB991000: Spacer
- MB991017: Front Hub Remover and Installer
- MB991354: Puller Body
- MB991897 or MB992011: Ball Joint Remover

REMOVAL SERVICE POINTS

<Added>

<<A>> DRIVESHAFT NUT REMOVAL <CASTLE NUT TYPE>

⚠ CAUTION

Do not apply the vehicle weight on the wheel bearing with the driveshaft nut loosened. Otherwise, the wheel bearing may be broken.

Use special tool MB990767 to counter the hub as shown in the figure to remove the driveshaft nut.

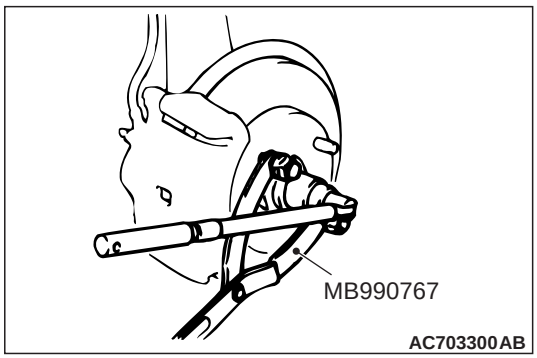

<<B>> STABILIZER LINK DISCONNECTION

Use a hexagon wrench to remove the stabilizer link and strut connection nut as shown in the figure.

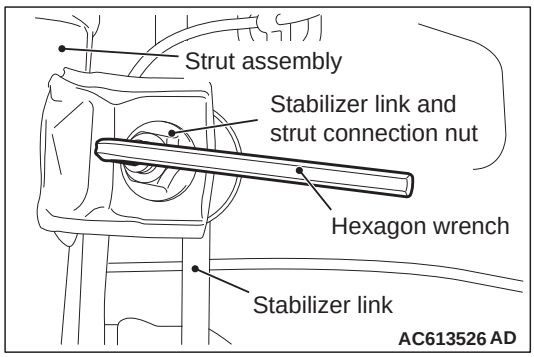

Insert the attached sheet 17 (1/4)

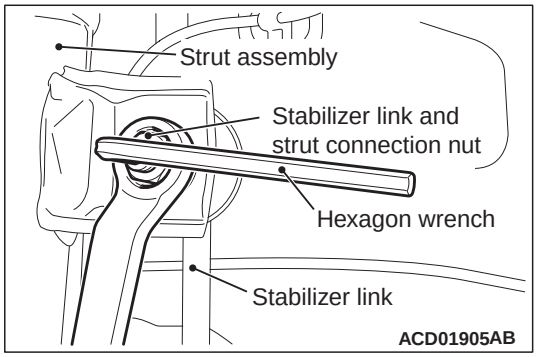

>>B<< STABILIZER LINK CONNECTION

Use a hexagon wrench to counterhold the stabilizer link as shown. Then use a wrench to install the nut securing the stabilizer link to the strut.

Insert the attached sheet 17 (3/4)

>>C<< WASHER/DRIVESHAFT NUT INSTALLATION

<CASTLE NUT TYPE>

Insert the attached sheet 17 (4/4)

⚠ CAUTION <Added>

Do not apply the vehicle weight on the front wheel hub assembly before fully tightening the driveshaft nut. Otherwise, the wheel bearing may be broken.

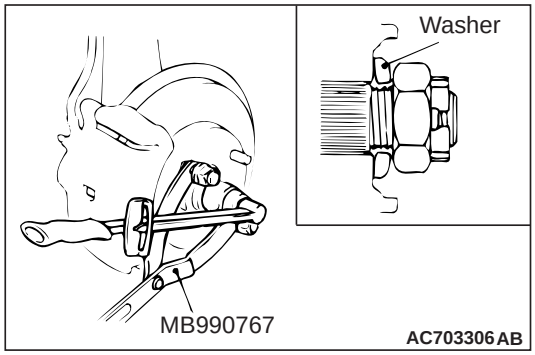

1. Incorporate the driveshaft assembly washer as shown in the illustration.
2. Use special tool MB990767 to tighten the driveshaft nuts. At this time, tighten the nuts within the specified torque range considering the final tightening.

   Tightening torque: 144 – 176 N·m (107 – 129 ft-lb)
3. If the pin holes do not align with the pins, tighten the driveshaft nut [less than 176 N·m(129 ft-lb)] and find the nearest hole then bend the cotter pin to fit it.

<FWD>

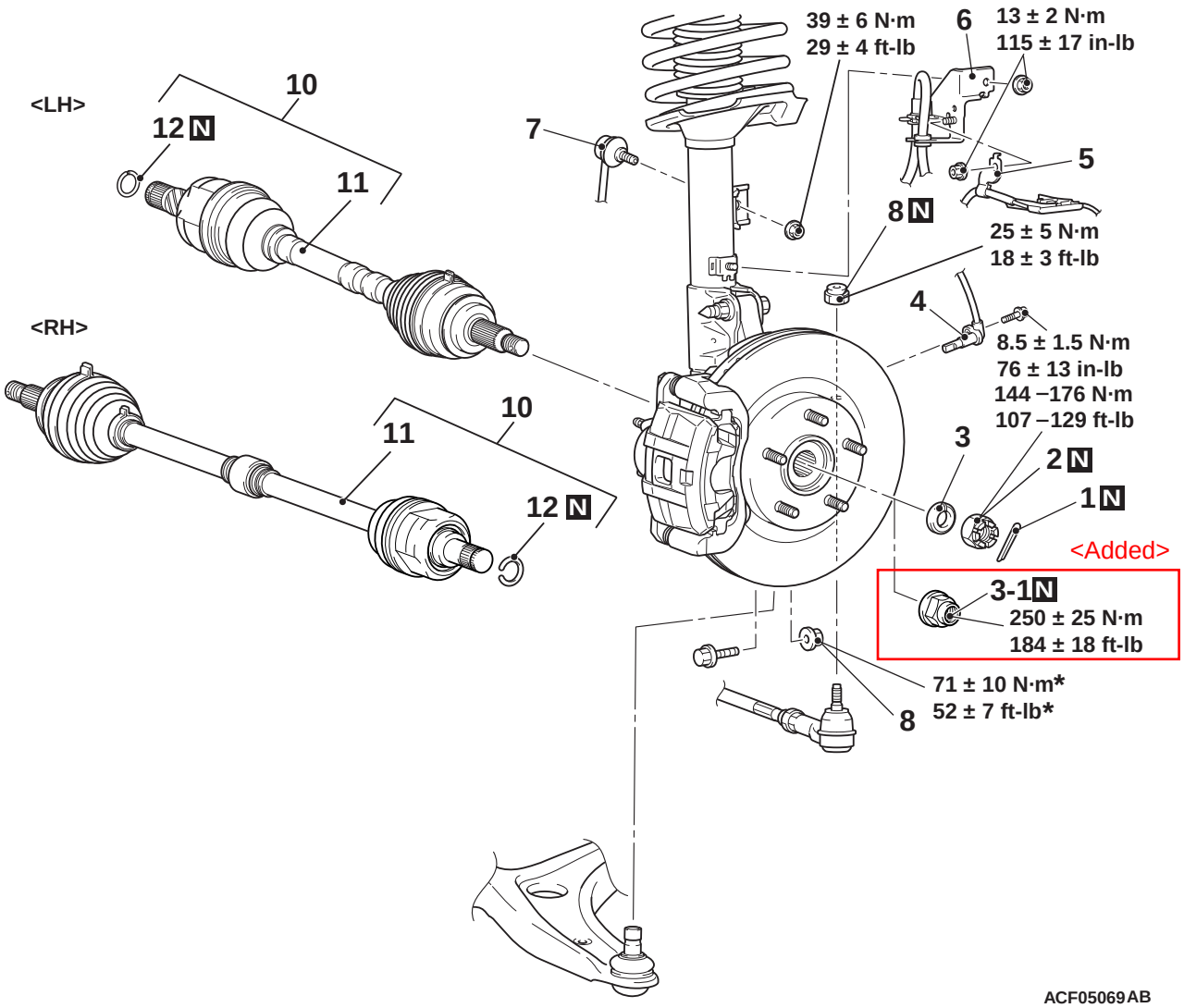

ACF05069AB

Removal steps

1. Cotter pin <Castle nut type>
2. Driveshaft nut <Castle nut type>
3. Washer <Castle nut type>
3-1. Driveshaft nut <Flange nut type>
4. Front wheel speed sensor (Refer to GROUP 35B, Wheel speed senser removal and installation) <Vehicles with ABS>
5. Front wheel speed sensor harness clamp <Vehicles with ABS>

Removal steps (Continued)

6. Brake hose bracket
7. Stabilizer link connection
8. Self-locking nut (tie-rod end connection)
9. Flange nut (lower arm ball joint connection)
10. Driveshaft assembly
11. Driveshaft
12. Circlip

<<A>> >>C<<
<<B>> >>B<<
<<C>>
<Added>
<<AA>> >>BA<<
<<D>> >>A<<

<AWD>

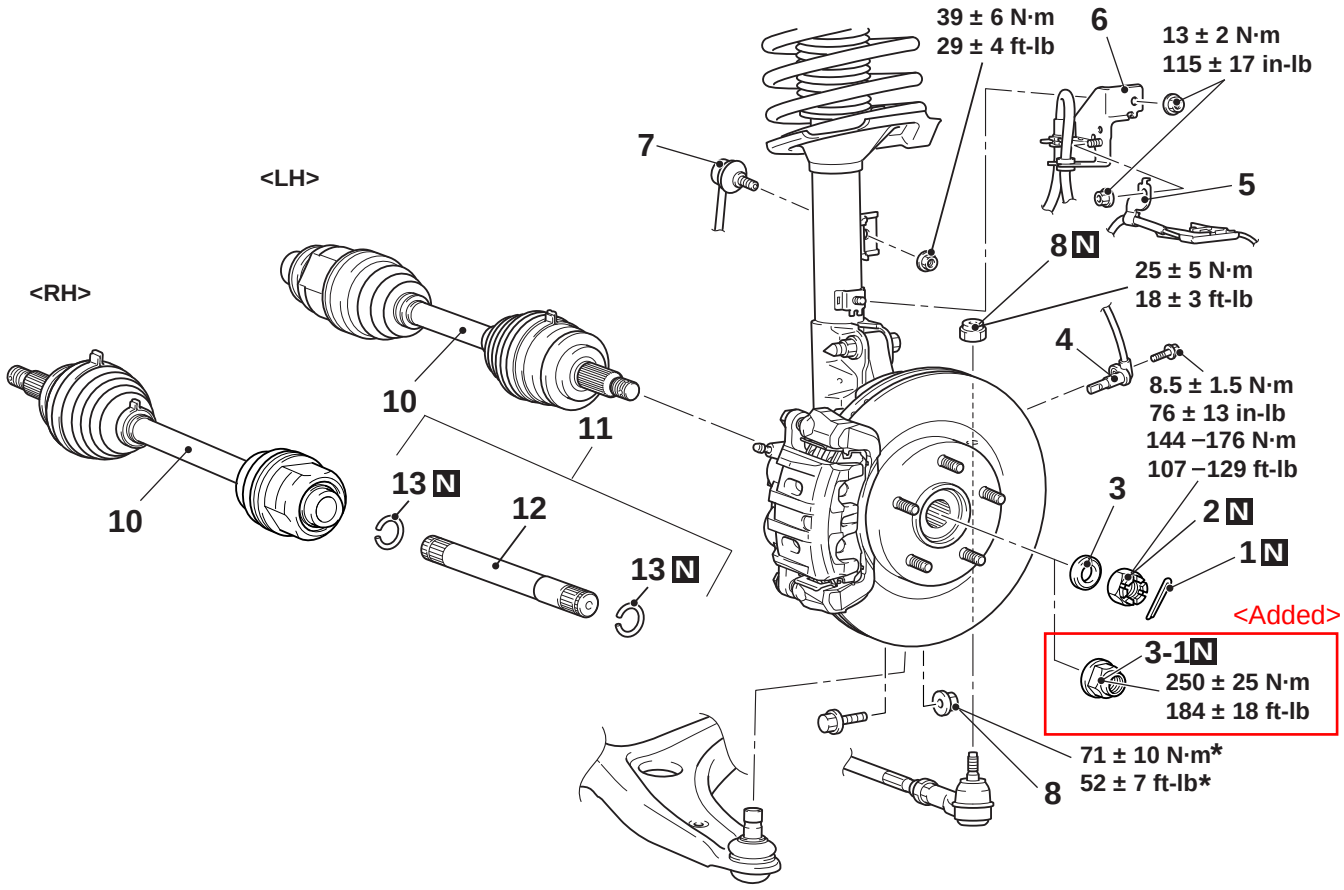

ACF04755AC

Removal steps

1. Cotter pin <Castle nut type>
2. Driveshaft nut <Castle nut type>
3. Washer <Castle nut type>

3-1. Driveshaft nut <Flange nut type>

4. Front wheel speed sensor (Refer to GROUP 35B, Wheel speed senser removal and installation)
5. Front wheel speed sensor harness clamp
6. Brake hose bracket
7. Stabilizer link connection
8. Self-locking nut (tie-rod end connection)

Removal steps (Continued)

9. Flange nut (lower arm ball joint connection)
10. Driveshaft assembly
11. Output shaft assembly (RH)
12. Output shaft (RH)
13. Circlip

Required Special Tools:

- MB990242: Puller Shaft
- MB990244: Puller Bar
- MB991271: Slide Hammer
- MB990767: Front Hub and Flange Yoke Holder
- MB991000: Spacer
- MB991017: Front Hub Remover and Installer
- MB991354: Puller Body
- MB991897 or MB992011: Ball Joint Remover

REMOVAL SERVICE POINTS

<Added>

<<A>> DRIVESHAFT NUT REMOVAL <CASTLE NUT TYPE>

⚠ CAUTION

Do not apply the vehicle weight on the wheel bearing with the driveshaft nut loosened. Otherwise, the wheel bearing may be broken.

Use special tool MB990767 to counter the hub as shown in the figure to remove the driveshaft nut.

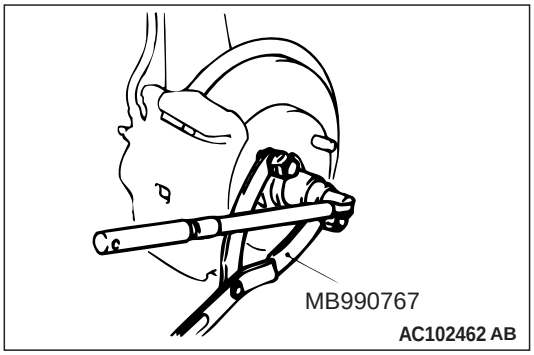

Insert the attached sheet 17 (1/4)

<<B>> STABILIZER LINK DISCONNECTION

Use a hexagon wrench to remove the stabilizer link and strut connection nut as shown in the figure.

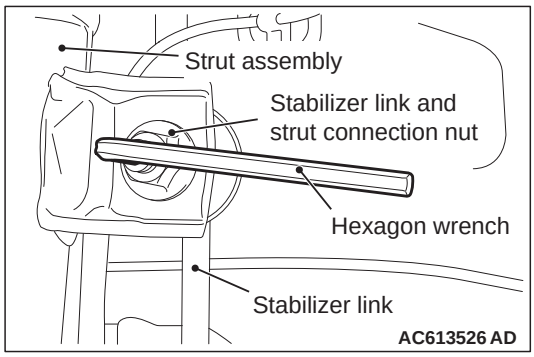

<<C>> SELF-LOCKING NUT (TIE-ROD END CONNECTION) REMOVAL

⚠ CAUTION

- **Loosen the self-locking nut (tie-rod end connection) from the ball joint, but do not remove here. Use the special tool.**
- **To prevent the special tool from dropping off, suspend it with a cord.**

1. Install special tool MB991897 or MB992011, as shown in the figure.

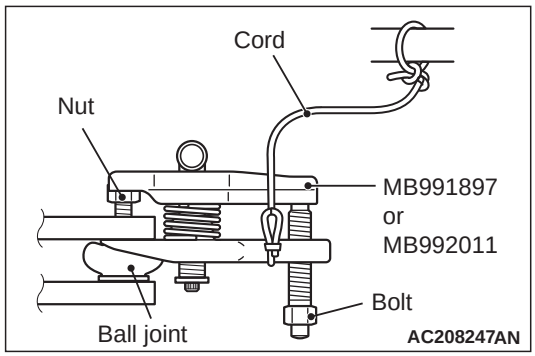

INSTALLATION SERVICE POINTS

>>A<< OUTPUT SHAFT ASSEMBLY (RH)/DRIVESHAFT ASSEMBLY INSTALLATION

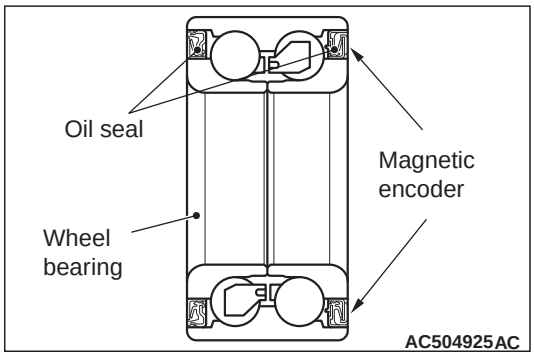

⚠ CAUTION

- **The magnetic encoder collects metallic particles easily, because it is magnetized. Make sure that the magnetic encoder should not collect metallic particles. Check that there is not any trouble prior to reassembling it.. <Vehicles with ABS>**
- **When installing the driveshaft, make sure that it does not contact with the magnetic encoder (integrated with the inner oil seal) to avoid damage. <Vehicles with ABS>**
- **Care must be taken to ensure that the oil seal of the transaxle is not damaged by the spline part of the drive-shaft assembly.**

>>B<< STABILIZER LINK CONNECTION

Use a hexagon wrench to install the stabilizer link and strut connection nut as shown in the figure.

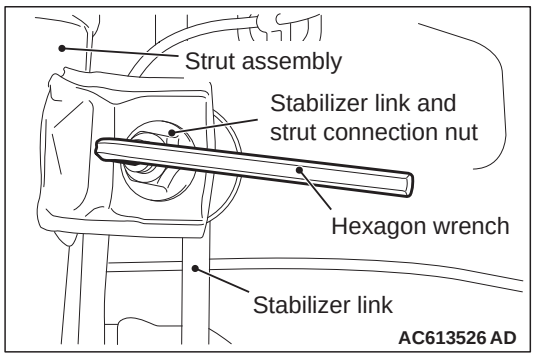

Insert the attached sheet 17 (2/4)

>>C<< WASHER/DRIVESHAFT NUT INSTALLATION <CASTLE NUT TYPE>

⚠ CAUTION <Added>

Do not apply the vehicle weight on the front wheel hub assembly before fully tightening the driveshaft nut. Otherwise, the wheel bearing may be broken.

Insert the attached sheet 17 (4/4)

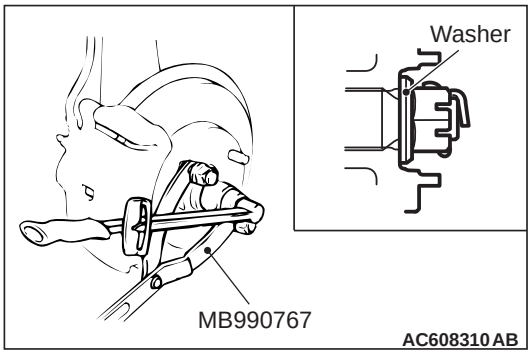

1. Be sure to install the driveshaft washer in the illustrated direction.
2. Using special MB990767, tighten the driveshaft nut. At this time, tighten the nut to the specified lower limit torque so that the pin hole may align with cotter pin.

   Tightening torque: 144 – 176 N·m (107 – 129 ft-lb)
3. If the pin hole does not align with the pin, tighten the driveshaft nut [less than 176 N·m (129 ft-lb)] and find the nearest hole, then fit the cotter pin.

<Added>

<<A-1>> DRIVESHAFT NUT REMOVAL <FLANGE NUT TYPE>

1. The staked portion of the driveshaft nut must face upwards.

⚠ CAUTION

- **Make sure that the lock nut chisel is set in the correct direction. Otherwise, the groove or thread in the driveshaft may be broken, or the tip of the chisel may be chipped.**
- **Never use a chisel which tip is damaged.**
- **For how to use the lock nut chisel, refer to the manufacturer's operating instructions.**

2. Set the special tool MB992700 in the groove of the driveshaft with its "UPPER" mark facing upwards. Then strike the staked portion of the driveshaft nut with the chisel and a hammer to raise up.

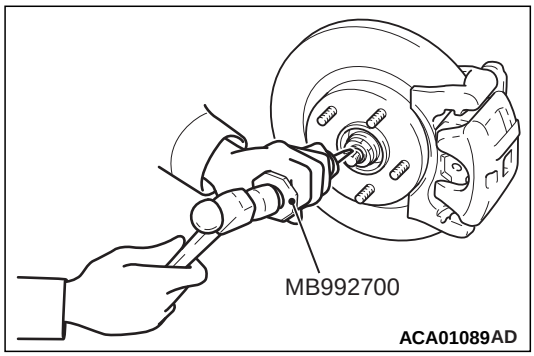

⚠ CAUTION

Be careful not to damage the thread of the driveshaft.

3. Raise up the staked portion of the driveshaft nut until it does not interfere with the shaft thread.

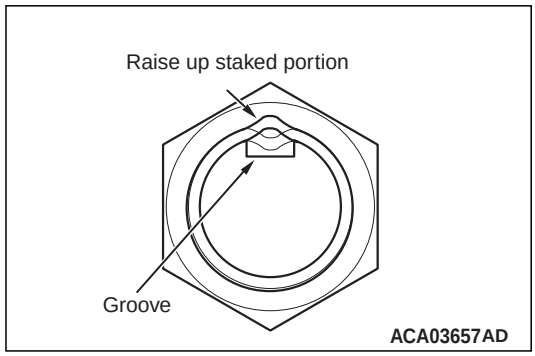

⚠ CAUTION

- **Never use a impact wrench to loosen the driveshaft nut.**
- **Do not apply the vehicle weight on the wheel bearing with the driveshaft nut loosened. Otherwise, the wheel bearing may be broken.**

4. Use special tool MB990767 to counter the hub as shown in the figure to remove the driveshaft nut.

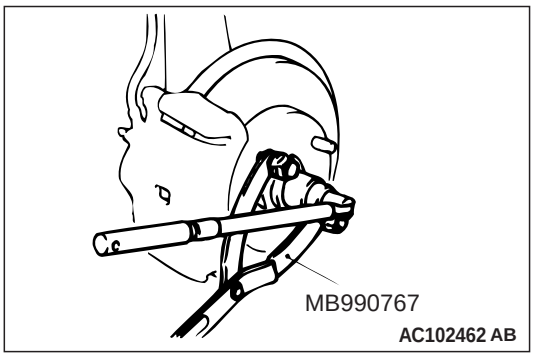

<Added>

>>A-1<< DRIVESHAFT NUT INSTALLATION <FLANGE NUT TYPE>

⚠ CAUTION

- **Do not apply the vehicle weight on the front wheel hub assembly before fully tightening the driveshaft nut. Otherwise, the wheel bearing may be broken.**
- **Insert the driveshaft so that no hub bolt is vertically above the groove of the driveshaft assembly.**

1. Check the hub seated surface for damage or corrosion.Whenever solvent is used for removing the corrosion, the surface should be degreased.
2. Apply the grease as shown and then insert the drive shaft assembly into the front hub.

   Specified grease: Shell Alvania Grease HDX or Dowcorning/Molykote BR2 Plus
   Amount to use:As required [About 1.0-1.5g (0.04-0.05 oz)]
3. Check that the new driveshaft nut can be turned smoothly by hand. Then tighten it until it is seated.

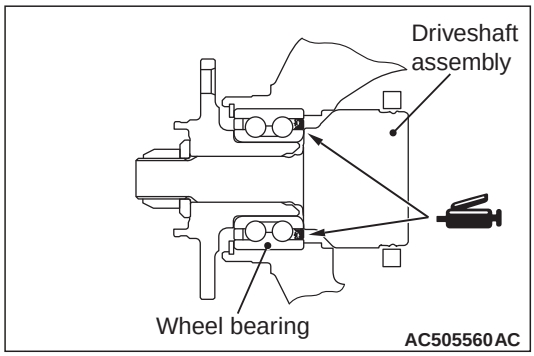

4. Using special tool MB990767, tighten the driveshaft nut.

   Tightening torque: 250 ± 25 N·m (184 ± 18 ft-lb)
5. After tightening to the specified torque, check that the nut is seated securely.

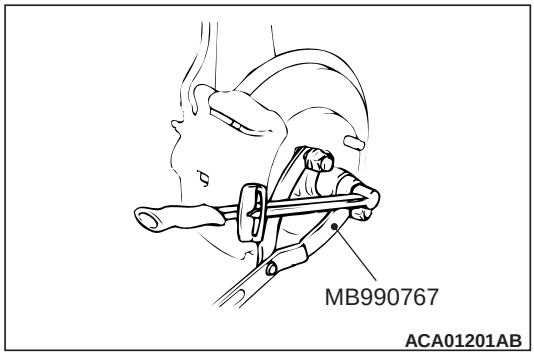

6. Use the chisel and a hammer to stake the nut until the center in the staked portion reaches the shown dimension.
7. Finally, check that the nut is not cracked at its staked portion.

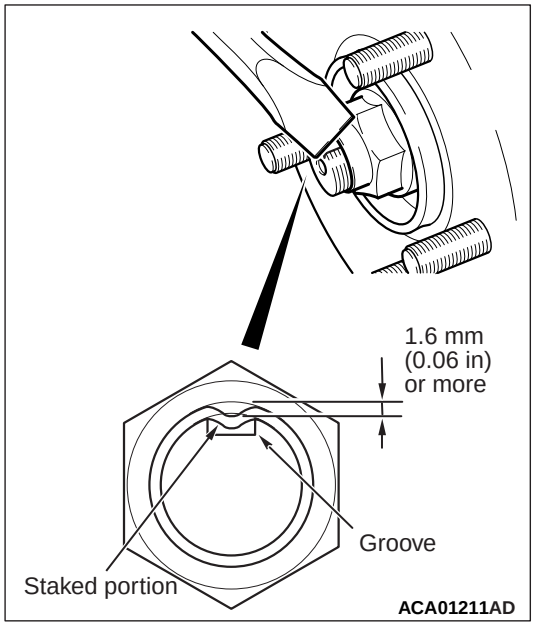

<Added>

>>B-1<< DRIVESHAFT NUT INSTALLATION <FLANGE NUT TYPE>

⚠ CAUTION

- **Do not apply the vehicle weight on the front wheel hub assembly before fully tightening the driveshaft nut. Otherwise, the wheel bearing may be broken.**
- **Insert the driveshaft so that no hub bolt is vertically above the groove of the driveshaft assembly.**

1. Check the hub seated surface for damage or corrosion.Whenever solvent is used for removing the corrosion, the surface should be degreased.
2. Apply the grease as shown and then insert the drive shaft assembly into the front hub.

   Specified grease: Shell Alvania Grease HDX or Dowcorning/Molykote BR2 Plus
   Amount to use: As required [About 1.0-1.5g (0.04-0.05 oz)]
3. Check that the new driveshaft nut can be turned smoothly by hand. Then tighten it until it is seated.

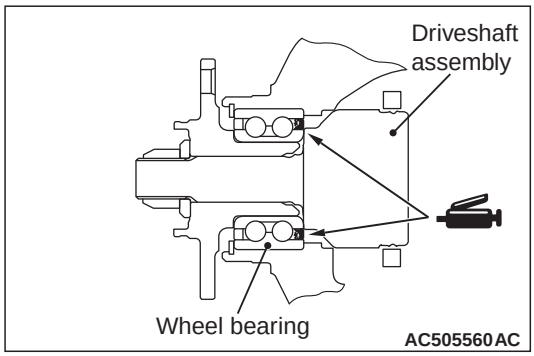

4. Using special tool MB990767, tighten the driveshaft nut.

   Tightening torque: 250 ± 25 N·m (184 ± 18 ft-lb)
5. After tightening to the specified torque, check that the nut is seated securely.

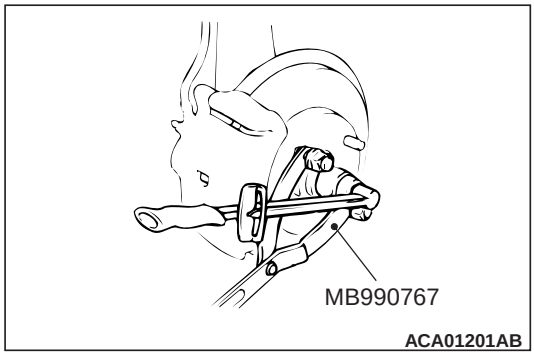

6. Use the chisel and a hammer to stake the nut until the center in the staked portion reaches the shown dimension.
7. Finally, check that the nut is not cracked at its staked portion.

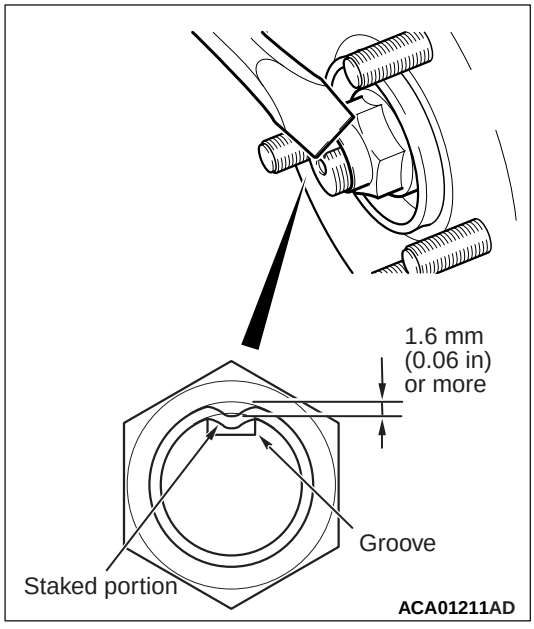

<Added>

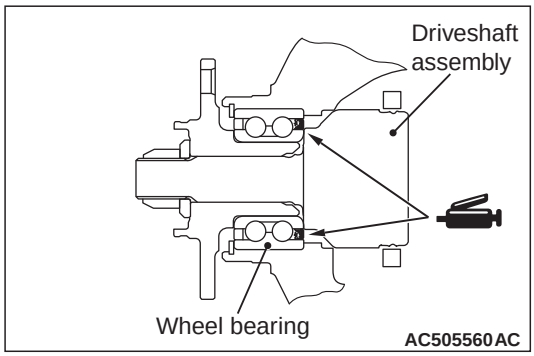

1-1. Apply the grease as shown and then insert the drive shaft assembly into the front hub.

Specified grease: Shell Alvania Grease HDX or Dowcorning/Molykote BR2 Plus
Amount to use:As required [About 1.0-1.5g (0.04-0.05 oz)]

A

LUBRICANTS

Item	Specified lubricant				Quantity
Inside of knuckle bore	Dowcorning/Molykote BR2 Plus or equivalent				As required (1.0 – 1.5 g)
PTJ	Repair kit grease	2WD	2000-CVT	LH	210 ± 10 g
				RH	210 ± 10 g
			2000-M/T	LH	210 ± 10 g
				RH	185 ± 10 g
			2400	LH	210 ± 10 g
				RH	225 ± 10 g
		4WD	2000-CVT, 2400	LH	210 ± 10 g
				RH	200 ± 10 g
			2000-M/T <PETROL>	LH	255 ± 10 g
				RH	200 ± 10 g
			2000-M/T <DIESEL>, 2200-M/T	LH/RH	255 ± 10 g
			2200-TC-SST, 3000	LH	245 ± 10 g
				RH	255 ± 10 g
EBJ	Repair kit grease	2WD	2000, 2400	LH/RH	120 ± 10 g
		4WD	2000-CVT, 2400	LH/RH	120 ± 10 g
			2000-M/T <PETROL>	LH	140 ± 10 g
				RH	120 ± 10 g
			2000-M/T <DIESEL>, 2200-M/T	LH/RH	140 ± 10 g
			2200-TC-SST	LH/RH	135 ± 10 g
			3000	LH/RH	140 ± 10 g

<Added>

Connection between the drive shaft assembly and the wheel bearing	Shell Alvania Grease HDX or Dowcorning/Molykote BR2 Plus	As required (About 1.0 – 1.5 g)

LUBRICANTS

B

Item	Specified lubricant	Quantity
Inside of knuckle bore	Dowcorning/Molykote BR2 Plus or equivalent	As required (1.0 – 1.5 g)
PTJ	Repair kit grease	210 ± 10 g
EBJ	Repair kit grease	120 ± 10 g

<Added>

Connection between the drive shaft assembly and the wheel bearing	Shell Alvania Grease HDX or Dowcorning/Molykote BR2 Plus	As required (About 1.0 – 1.5 g)

C

LUBRICANTS

<PETROL>

Item	Specified lubricant							Quantity
Inside of knuckle bore	Molykote BR2 Plus or equivalent							As required (1.0 – 1.5 g)
Boot grease	Repair kit grease	1800			LH	Out side	EBJ boot	110 ± 10 g
						In side	PTJ boot	185 ± 10 g
					RH	Out side	EBJ boot	110 ± 10 g
						In side	ETJ boot	120 ± 10 g
		2000	2WD	M/T	LH	Out side	EBJ boot	120 ± 10 g
						In side	PTJ boot	210 ± 10 g
					RH	Out side	EBJ boot	120 ± 10 g
						In side	PTJ boot	185 ± 10 g
				CVT	LH	Out side	EBJ boot	110 ± 10 g
						In side	PTJ boot	185 ± 10 g
					RH	Out side	EBJ boot	110 ± 10 g
						In side	ETJ boot	120 ± 10 g
			4WD	M/T	LH	Out side	EBJ boot	120 ± 10 g
						In side	PTJ boot	210 ± 10 g
					RH	Out side	EBJ boot	120 ± 10 g
						In side	PTJ boot	200 ± 10 g
				CVT	LH	Out side	EBJ boot	110 ± 10 g
						In side	PTJ boot	185 ± 10 g
					RH	Out side	EBJ boot	120 ± 10 g
						In side	PTJ boot	200 ± 10 g

<DIESEL>

Item	Specified lubricant			Quantity
Inside of knuckle bore	Molykote BR2 Plus or equivalent			As required (1.0 – 1.5 g)
Boot grease	Repair kit grease	Out side	EBJ boot	140 ± 10 g
		In side	PTJ boot	255 ± 10 g

<Added>

Connection between the drive shaft assembly and the wheel bearing	Shell Alvania Grease HDX or Dowcorning/Molykote BR2 Plus	As required (About 1.0 – 1.5 g)

D

LUBRICANT

Item	Specified lubricant			Quantity
Inside of knuckle bore	Dowcorning/Molykote BR2 Plus or equivalent			As required (1.0 – 1.5 g)
TJ boot grease	Repair kit grease	2WD	1500-A/T	115 ± 10 g
			1600	130 ± 10 g
ETJ boot grease	Repair kit grease	2WD	1500-M/T	110 ± 10 g
			1800 Petrol-M/T-LH	120 ± 10 g
			1800 Petrol-M/T-RH	130 ± 10 g
			1800 Petrol-CVT	120 ± 10 g
			2000-M/T-LH	120 ± 10 g
			2000-M/T-RH	130 ± 10 g
			2000-CVT	120 ± 10 g
		4WD	2000-M/T-LH	120 ± 10 g
			2000-CVT-LH	120 ± 10 g
			RALLIART	120 ± 10 g
PTJ boot grease	Repair kit grease	2WD	1800 Diesel-LH	210 ± 10 g
			1800 Diesel-RH	185 ± 10 g
		4WD	2000-M/T-RH	200 ± 10 g
			2000-CVT-RH	200 ± 10 g
EBJ boot grease	Repair kit grease	2WD	1500	75 ± 10 g
			1600	110 ± 10 g
			1800 Petrol	110 ± 10 g
			2000	110 ± 10 g
			1800 Diesel	120 ± 10 g
		4WD	2000-M/T-LH	110 ± 10 g
			2000-M/T-RH	120 ± 10 g
			2000-CVT-LH	110 ± 10 g
			2000-CVT-RH	120 ± 10 g
			RALLIART	105 ± 10 g
Dust seal inner grease	Repair kit grease	2WD	2000-RH	6 – 10 g
Dust seal outer grease	Repair kit grease		2000-RH	3 – 7 g

<Added>

Connection between the drive shaft assembly and the wheel bearing	Shell Alvania Grease HDX or Dowcorning/Molykote BR2 Plus	As required (About 1.0 – 1.5 g)

<Added>

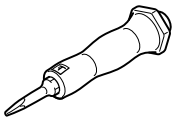 B992700	Lock nut chisel	General service tool	Raising up the swaged part driveshaft nut

Tool	Number	Name	Use
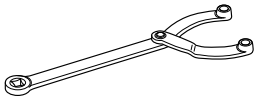 B990767	MB990767	Front hub and flange yoke holder	Fixing of hub
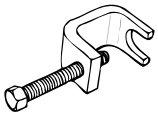 MB991618	MB991618	Hub bolt remover	Removal of hub bolt
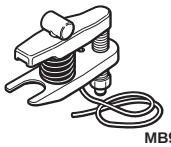 MB991897	MB991897 or MB992011	Ball joint remover	Ball joint disconnection *NOTE: Conventional steering linkage puller MB991406, MB990635, or MB991113 can also be used.*
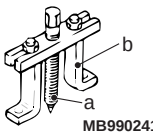 MB990241AD	MB990241 a:MB990242 b:MB990244	Axle shaft puller a: Puller shaft b: Puller bar	• Driveshaft removal • Hub assembly removal
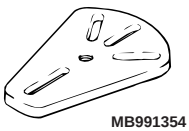 MB991354	MB991354	Puller body	
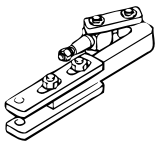	MB991056 or MB991355	Knuckle arm bridge	• Driveshaft removal • Hub removal
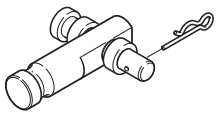 B992250	MB992250	Knuckle arm bridge attachment	Hub removal *NOTE: Replace this attachment with a guide of MB991355 and use them.*
 MB991388	MB991388	Bush remover base	Dust shield installation
 MB991576	MB991576	Base	

REMOVAL AND INSTALLATION

⚠ CAUTION

- **The magnetic encoder collects metallic particles easily, because it is magnetized. Make sure that the magnetic encoder should not collect metallic particles. Check that there is not any trouble prior to reassembling it.**
- **When removing and installing the front wheel hub assembly, make sure that the magnetic encoder (integrated with the inner oil seal) does not contact with surrounding parts to avoid damage.**
- **When removing and installing the front wheel speed sensor, make sure that the sensor head at the end does not contact with surrounding parts to avoid damage.**
- **The parts indicated by * are the nuts with friction coefficient stabilizer. In removal, ensure there is no damage, clean dust and soiling from the bearing and thread surfaces, and tighten them to the specified torque.**

Post-installation operation
- Using your fingers, press the Ball Joint Dust Cover to check for a crack or damage.

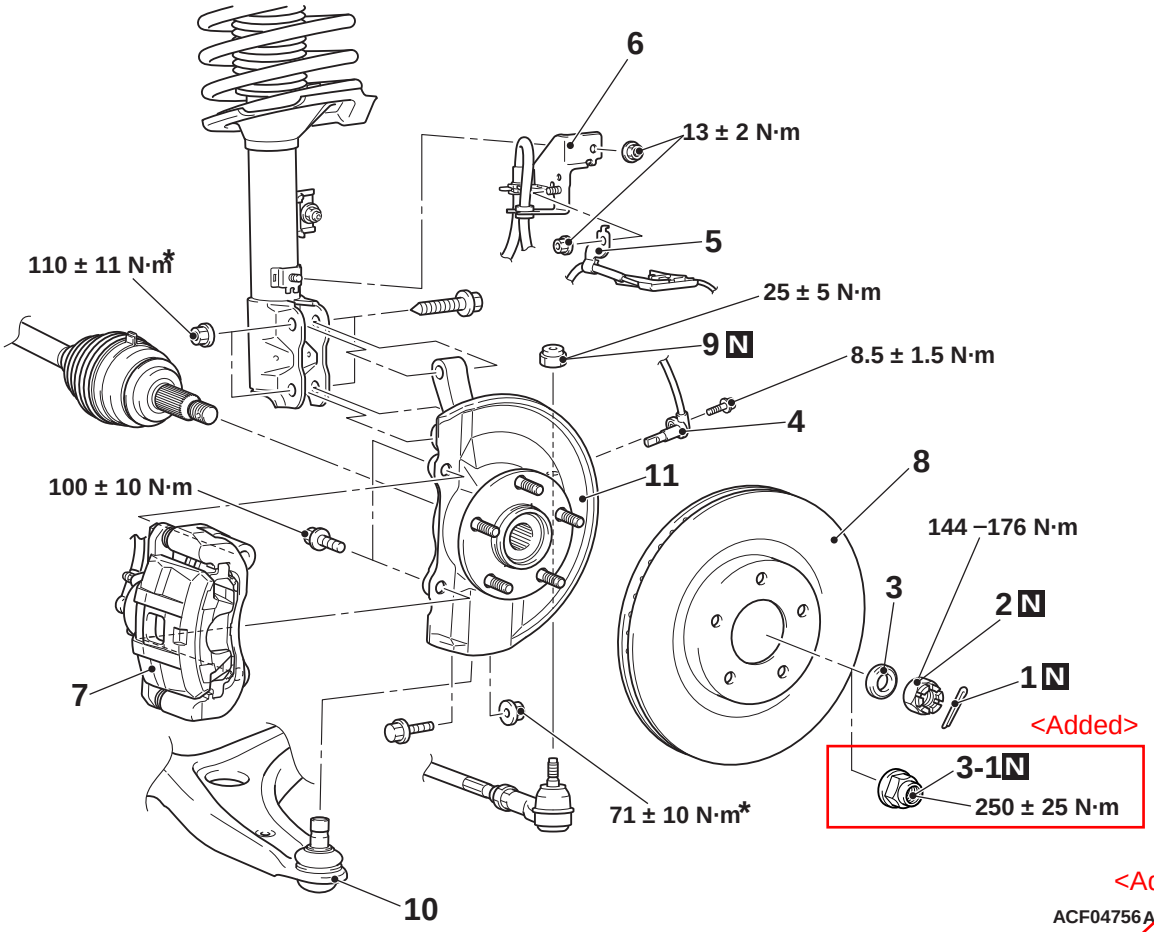

Removal steps
- Front height sensor to lower arm connection removal (RH) (Refer to GROUP 54A – Height Sensor .) <Vehicles with headlamp automatic levelling system> <Added>

1. Split pin <Castle nut type>

Removal steps (Continued)

<<A>> >>A<< 2. Front driveshaft nut <Castle nut type>

>>A<< 3. Washer <Castle nut type>

<<AA>> >>AA<< 3-1. Driveshaft nut <Flange nut type>

Removal steps (Continued)

4. Front wheel speed sensor (Refer to GROUP 35B – Wheel speed sensor) <Vehicles without ASC > or (Refer to GROUP 35C – Wheel speed sensor) <Vehicles with ASC>
5. Front wheel speed sensor harness clamp
6. Brake hose bracket

<<B>> 7. Brake caliper assembly

8. Brake disc

<<C>> 9. Self-locking nut (tie-rod end connection)

10. Lower arm ball joint connection

<<D>> 11. Front wheel hub & knuckle assembly

REMOVAL SERVICE POINTS

<<A>> FRONT DRIVESHAFT NUT REMOVAL <CASTLE NUT TYPE>

<Added>

⚠ CAUTION

Do not apply the vehicle weight on the wheel bearing with the front driveshaft nut loosened. Otherwise, the wheel bearing may be broken.

Use special tool front hub and flange yoke holder (MB990767) to counter the hub as shown in the figure to remove the front driveshaft nut.

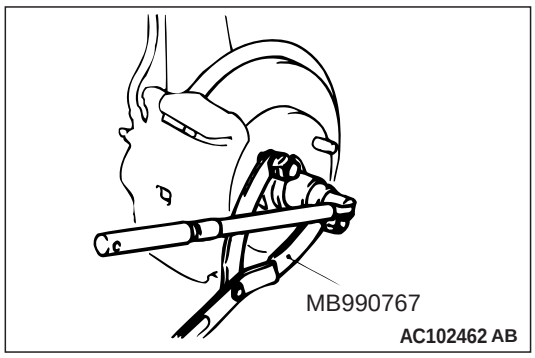

<<B>> BRAKE CALIPER ASSEMBLY REMOVAL

1. Remove the brake caliper assembly with brake hose.
2. Secure the removed brake caliper assembly with a wire or other similar material at a position where it will not interfere with the removal and installation of the hub knuckle assembly.

Insert the attached sheet 29 (1/5)

<<D>> DRIVESHAFT AND HUB KNUCKLE ASSEMBLY DISCONNECTION

⚠ CAUTION

- **The magnetic encoder collects metallic particles easily, because it is magnetized. Make sure that the magnetic encoder does not collect metallic particles.**
- **When removing the driveshaft, make sure that it does not contact with the magnetic encoder (integrated with the inner oil seal) to avoid damage.**

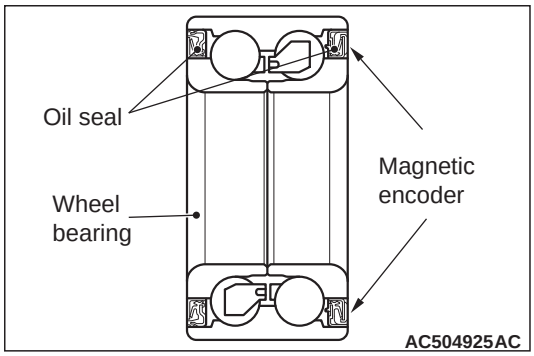

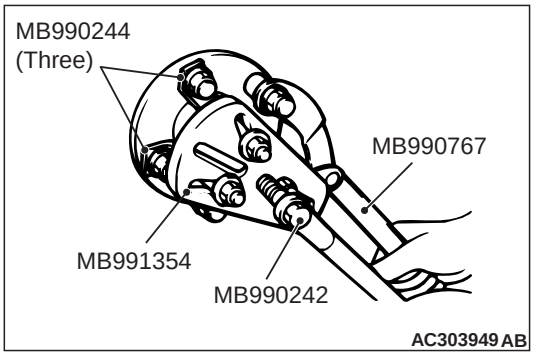

If the driveshaft is seized, use the following special tools to push the driveshaft out from the hub:

- Puller shaft (MB990242)
- Puller bar (MB990244)
- Front hub and flange yoke holder (MB990767)
- Puller body (MB991354)

Insert the attached sheet 29 (2/5)

INSTALLATION SERVICE POINTS

Insert the attached sheet 29 (5/5)

>>A<< WASHER/FRONT DRIVESHAFT NUT INSTALLATION <CASTLE NUT TYPE>

<Added>

⚠ CAUTION

Do not apply the vehicle weight on the front wheel hub assembly before fully tightening the front driveshaft nut. Otherwise, the wheel bearing may be broken.

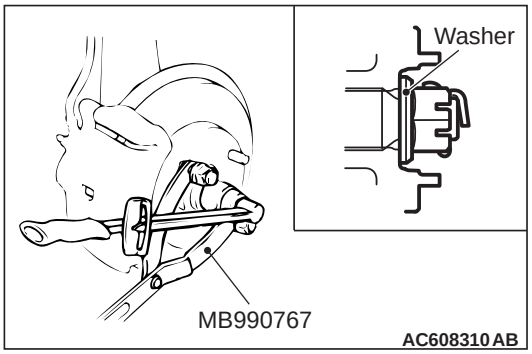

1. Incorporate the front driveshaft assembly washer as shown in the illustration.
2. Use special tool front hub and flange yoke holder (MB990767) to tighten the front driveshaft nut to the specified torque. Tighten it to the lower limit of specified torque in order to align the pin holes.

   Tightening torque: 144 – 176 N·m
3. If the pin holes are not aligned, retighten up to 176 N·m. Set the split pin into the first aligned hole and bend it.

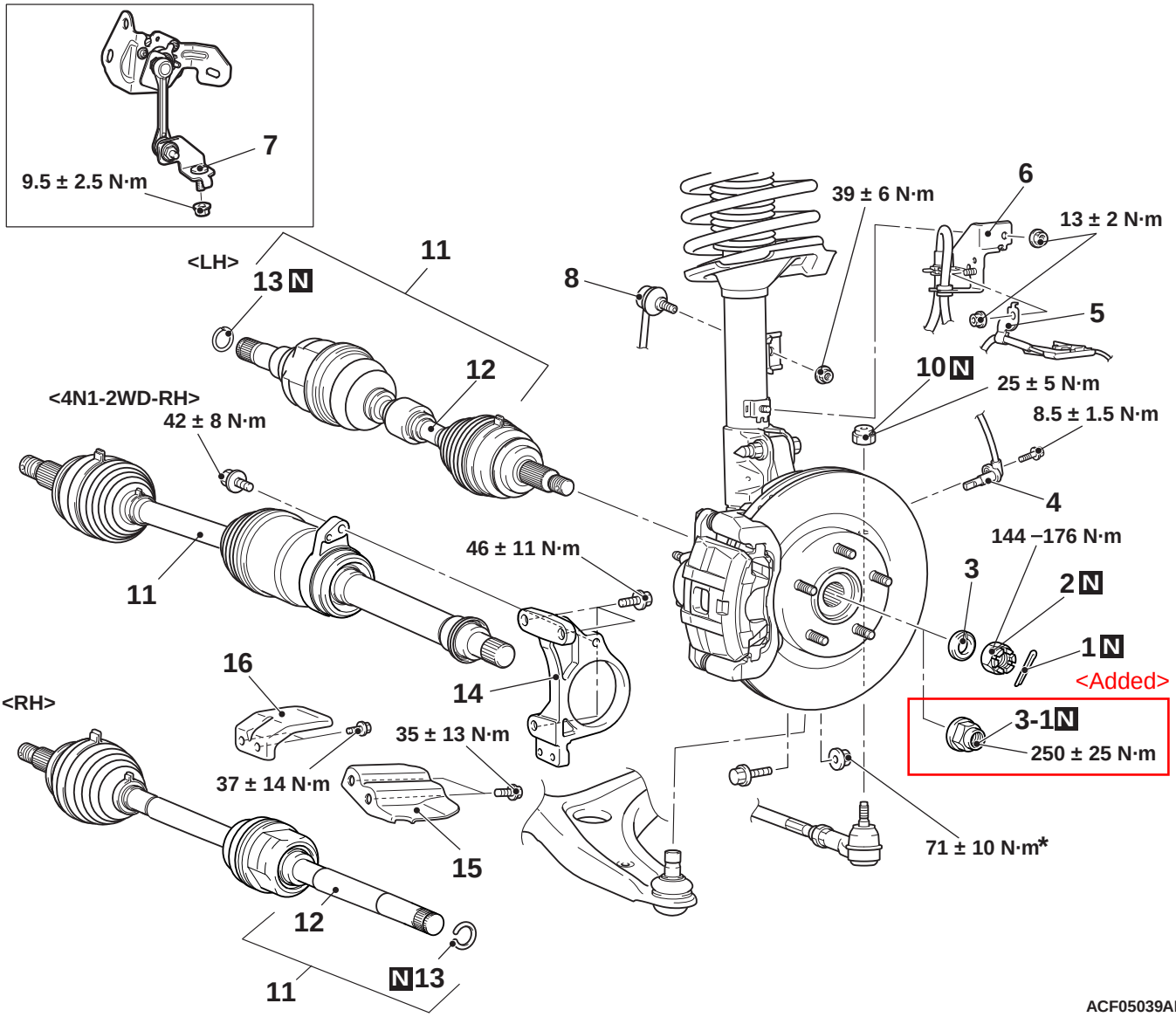

ACF05039AB

Removal steps

		1.	Split pin <Castle nut type>
<<A>>	>>C<<	2.	Front driveshaft nut <Castle nut type>
	>>C<<	3.	Washer <Castle nut type>
<<AA>>	>>BA<<	3-1.	Driveshaft nut <Flange nut type>
		4.	Front wheel speed sensor
		5.	Front wheel speed sensor harness clamp
		6.	Brake hose bracket
		7.	Front height sensor to lower arm connection <Vehicles with headlamp automatic levelling system>

<Added>

Removal steps (Continued)

<<B>>	>>B<<	8.	Stabilizer link connection
		9.	Self-locking nut (lower arm ball joint connection)
<<C>>		10.	Self-locking nut (tie-rod end connection)
<<D>>	>>A<<	11.	Driveshaft assembly
		12.	Driveshaft
		13.	Circlip
		14.	Adapter bracket
		15.	Heat protector <4HK>
		16.	Heat protector <6B3>

REMOVAL SERVICE POINTS

<<A>> DRIVESHAFT NUT REMOVAL <CASTLE NUT TYPE>

<Added>

⚠ CAUTION

Do not apply the vehicle weight on the wheel bearing with the driveshaft nut loosened. Otherwise, the wheel bearing may be broken.

Use special tool front hub and flange yoke holder (MB990767) to counter the hub as shown in the figure to remove the driveshaft nut.

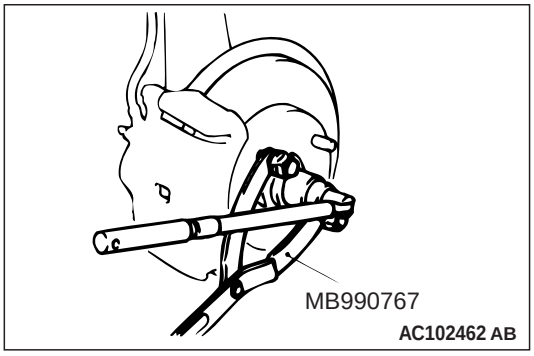

Insert the attached sheet 29 (1/5)

<<B>> STABILIZER LINK DISCONNECTION

Use a hexagon wrench to remove the stabilizer link and strut connection nut as shown in the figure.

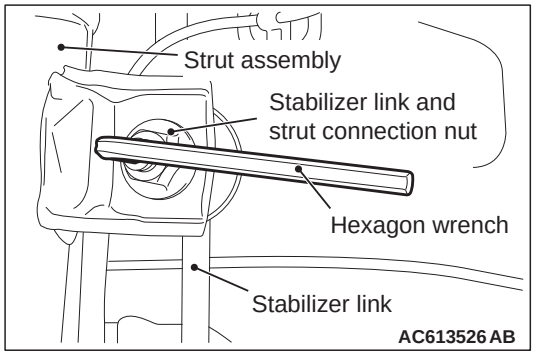

<<C>> SELF-LOCKING NUT (TIE-ROD END CONNECTION) REMOVAL

⚠ CAUTION

- **Loosen the self-locking nut (tie-rod end connection) from the ball joint, but do not remove here. Use the special tool.**
- **To prevent the special tool from dropping off, suspend it with a cord.**

1. Install special tool ball joint remover (MB991897 or MB992011) as shown in the figure.

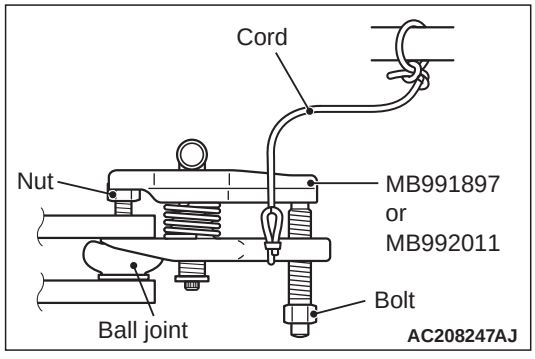

>>B<< STABILIZER LINK CONNECTION

Use a hexagon wrench to install the stabilizer link and strut connection nut as shown in the figure.

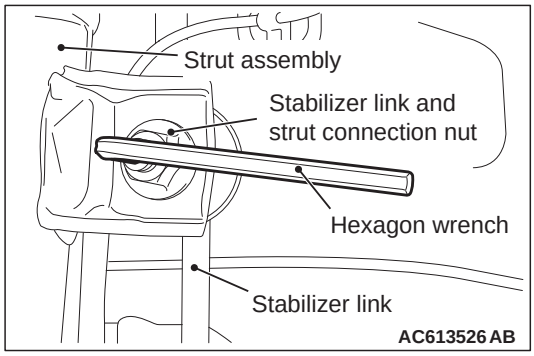

Insert the attached sheet 29 (3/5)

Insert the attached sheet 29 (5/5)

>>C<< WASHER/DRIVESHAFT NUT INSTALLATION <CASTLE NUT TYPE>

<Added>

⚠ CAUTION

Do not apply the vehicle weight on the front wheel hub assembly before fully tightening the driveshaft nut. Otherwise, the wheel bearing may be broken.

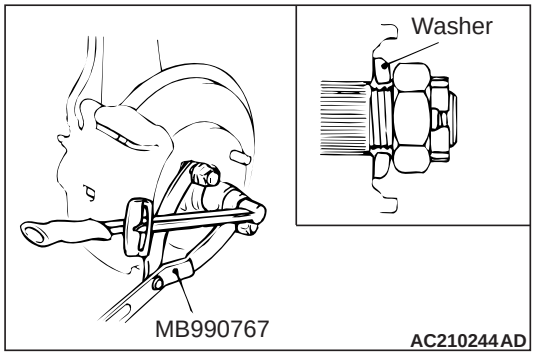

1. Incorporate the driveshaft assembly washer as shown in the illustration.
2. Using special tool front hub and flange yoke holder (MB990767), tighten the driveshaft nut. At this time, tighten the nut to the specified lower limit torque so that the pin hole may align with split pin.

   Tightening torque: 144 - 176 N·m
3. If the pin hole does not align with the pin, tighten the driveshaft nut (less than 176 N·m) and find the nearest hole, then fit the split pin.

<2WD>

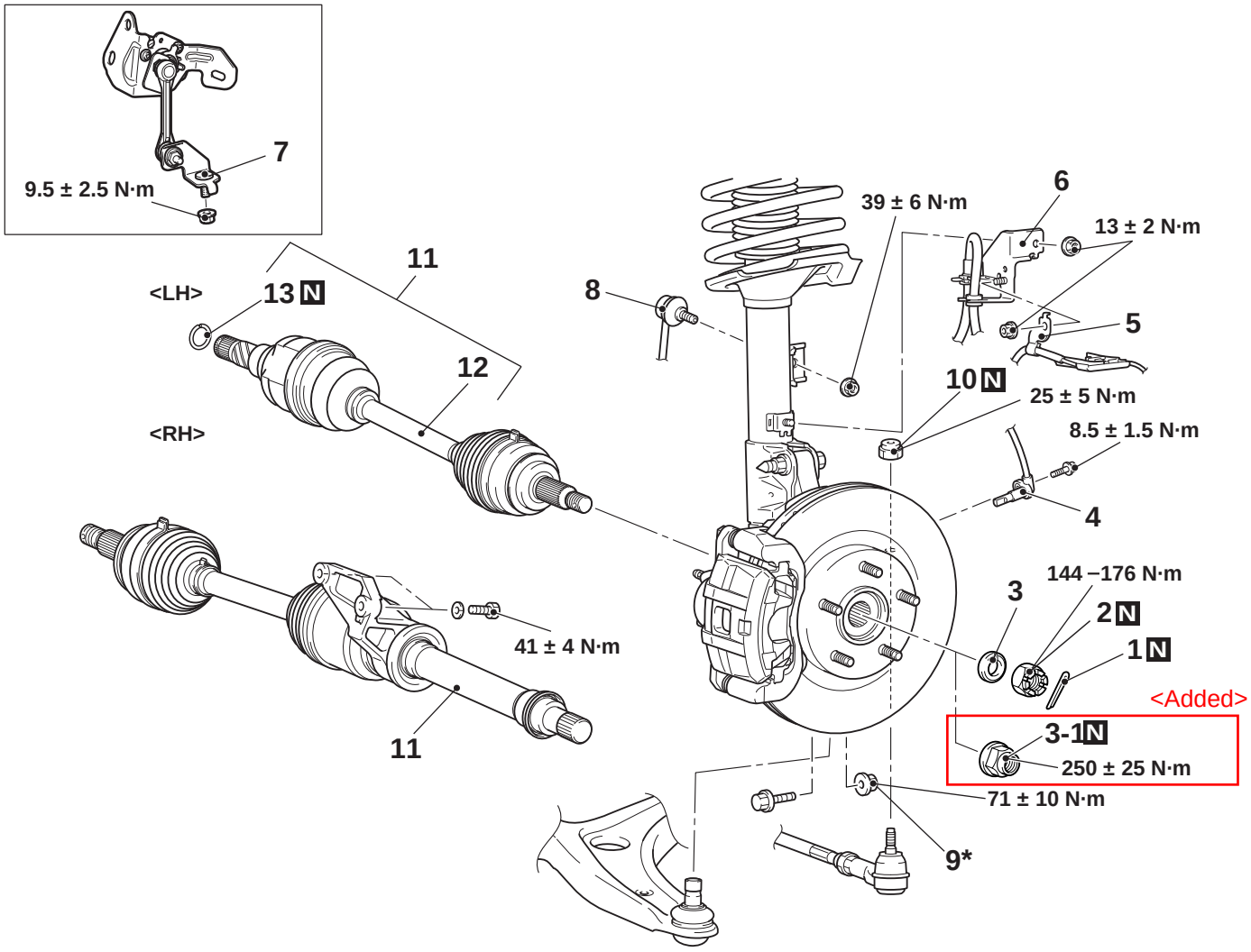

ACF04683AC

Removal steps

1. Front driveshaft nut <Castle nut type>
2. Washer <Castle nut type>
3. Front driveshaft nut <Castle nut type>
3-1. Driveshaft nut <Flange nut type>
4. Front wheel speed sensor
5. Front wheel speed sensor harness clamp
6. Brake hose bracket

Removal steps (Continued)

7. Front height sensor to lower arm connection <Vehicles with headlamp automatic levelling system>
8. Stabilizer link connection
9. Self-locking nut (lower arm ball joint connection)
10. Self-locking nut (tie-rod end connection)
11. Driveshaft assembly
12. Driveshaft
13. Circlip

<<A>> >>C<<
<<AA>> >>BA<<
<<B>> >>B<<
<<C>>
<<D>> >>A<<

<4WD>

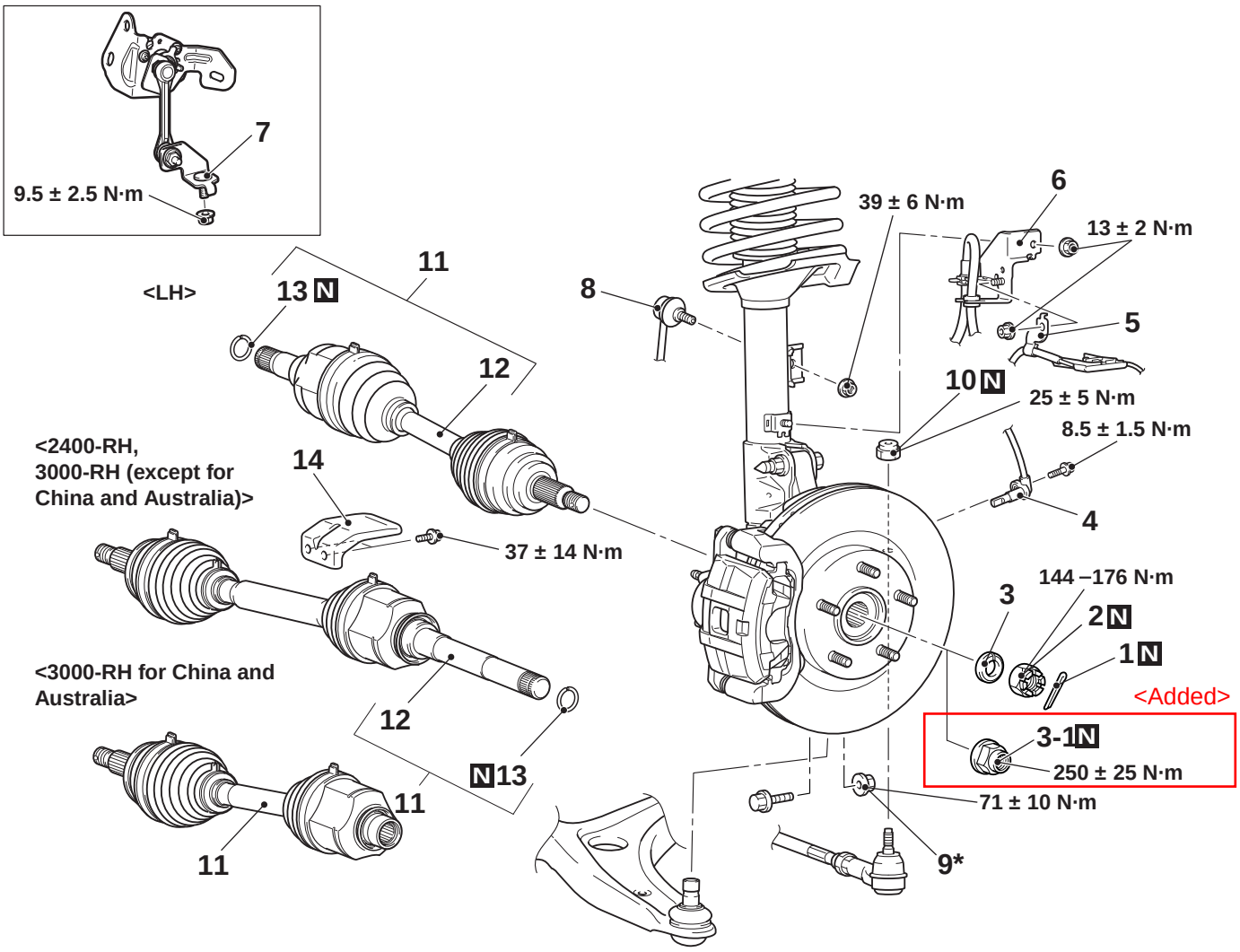

ACF06338AB

Removal steps

1. Front driveshaft nut <Castle nut type>
2. Washer <Castle nut type> <Added>
3. Front driveshaft nut <Castle nut type>
- 3-1. Driveshaft nut <Flange nut type>
4. Front wheel speed sensor
5. Front wheel speed sensor harness clamp
6. Brake hose bracket
7. Front height sensor to lower arm connection <Vehicles with headlamp automatic levelling system>

Removal steps (Continued)

8. Stabilizer link connection
9. Self-locking nut (lower arm ball joint connection)
10. Self-locking nut (tie-rod end connection)
11. Driveshaft assembly
12. Driveshaft
13. Circlip
14. Heat protector <3000-RH (except for China and Australia)>

REMOVAL SERVICE POINTS

<<A>> DRIVESHAFT NUT REMOVAL <CASTLE NUT TYPE>

<Added>

⚠ CAUTION

Do not apply the vehicle weight on the wheel bearing with the driveshaft nut loosened. Otherwise, the wheel bearing may be broken.

Use special tool front hub and flange yoke holder (MB990767) to counter the hub as shown in the figure to remove the driveshaft nut.

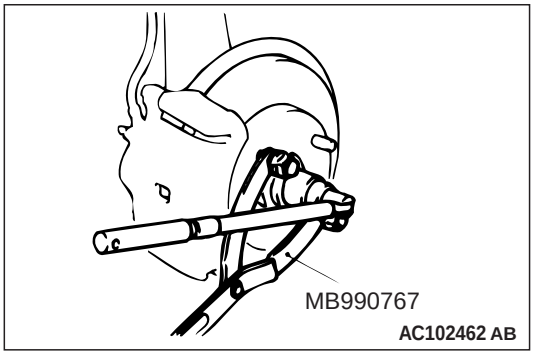

Insert the attached sheet 29 (1/5)

<<B>> STABILIZER LINK DISCONNECTION

Use a hexagon wrench to remove the stabilizer link and strut connection nut as shown in the figure.

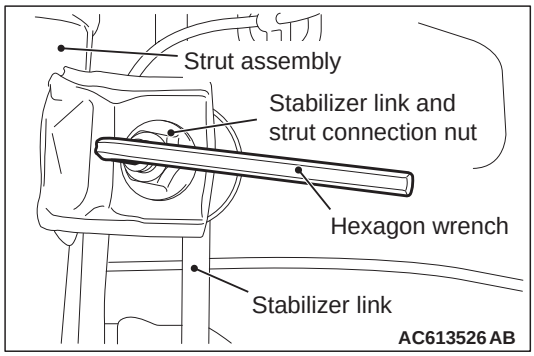

<<C>> SELF-LOCKING NUT (TIE-ROD END CONNECTION) REMOVAL

⚠ CAUTION

- **Loosen the self-locking nut (tie-rod end connection) from the ball joint, but do not remove here. Use the special tool.**
- **To prevent the special tool from dropping off, suspend it with a cord.**

1. Install special tool ball joint remover (MB991897 or MB992011) as shown in the figure.

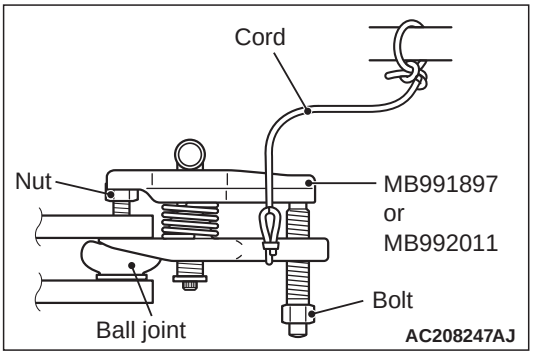

>>B<< STABILIZER LINK CONNECTION

Use a hexagon wrench to install the stabilizer link and strut connection nut as shown in the figure.

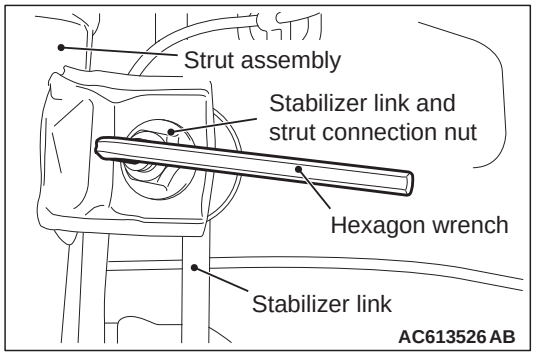

Insert the attached sheet 29 (3/5)

Insert the attached sheet 29 (5/5)

>>C<< WASHER/DRIVESHAFT NUT INSTALLATION <CASTLE NUT TYPE>

<Added>

⚠ CAUTION

Do not apply the vehicle weight on the front wheel hub assembly before fully tightening the driveshaft nut. Otherwise, the wheel bearing may be broken.

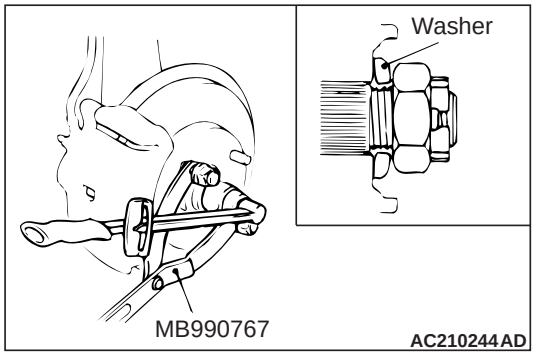

1. Incorporate the driveshaft assembly washer as shown in the illustration.
2. Using special tool front hub and flange yoke holder (MB990767), tighten the driveshaft nut. At this time, tighten the nut to the specified lower limit torque so that the pin hole may align with split pin.

   Tightening torque: 144 - 176 N·m
3. If the pin hole does not align with the pin, tighten the driveshaft nut (less than 176 N·m) and find the nearest hole, then fit the split pin.

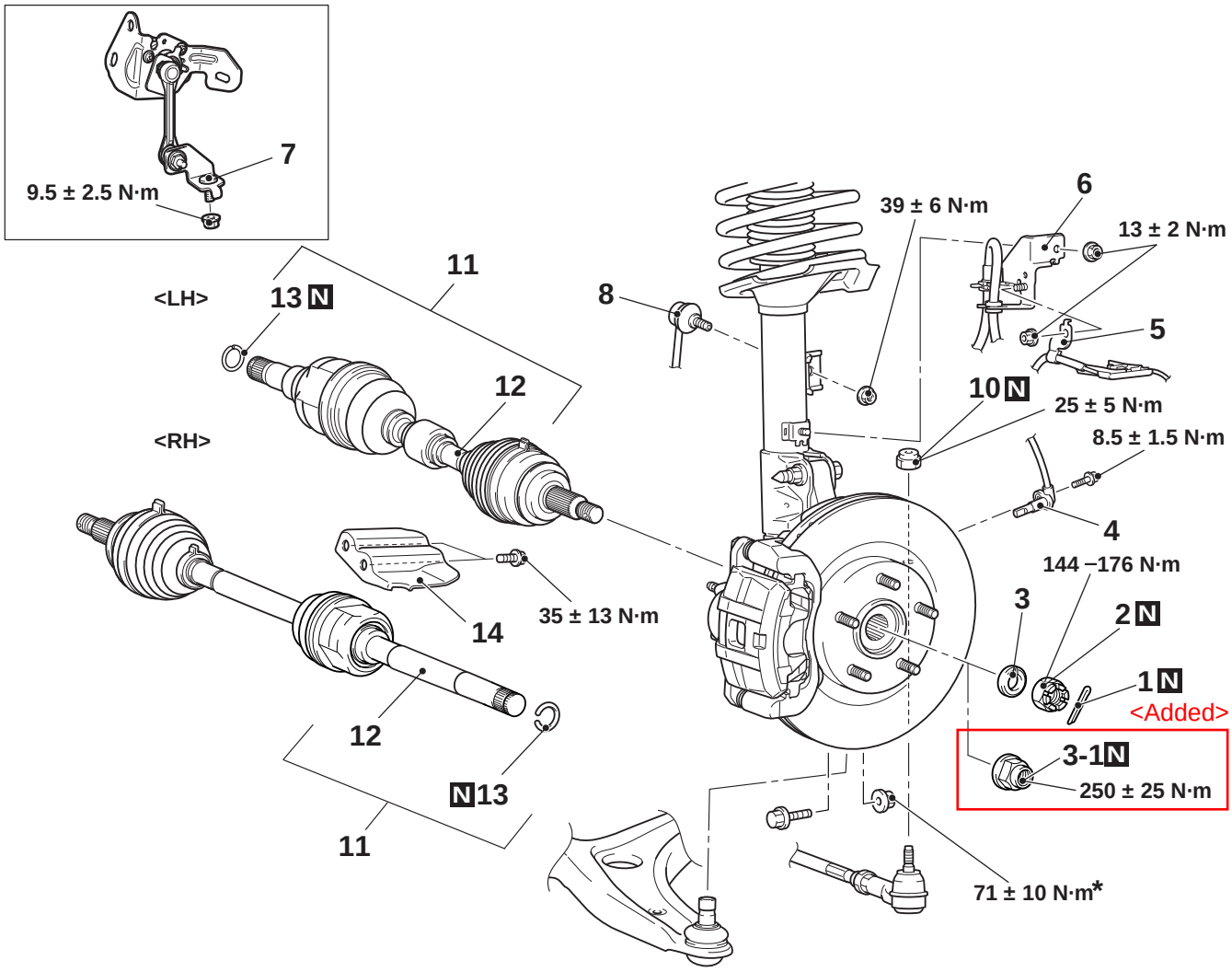

ACF06598AB

Removal steps

1. Split pin <Castle nut type>
2. Front driveshaft nut <Castle nut type>
3. Washer <Castle nut type>

<Added>

3-1. Driveshaft nut <Flange nut type>

4. Front wheel speed sensor
5. Front wheel speed sensor harness clamp
6. Brake hose bracket

Removal steps (Continued)

7. Front height sensor to lower arm connection <Vehicles with headlamp automatic levelling system>
8. Stabilizer link connection
9. Flange nut (lower arm ball joint connection)
10. Self-locking nut (tie-rod end connection)
11. Driveshaft assembly
12. Driveshaft
13. Circlip
14. Heat protector <2200>

REMOVAL SERVICE POINTS

<<A>> DRIVESHAFT NUT REMOVAL <CASTLE NUT TYPE>

⚠ CAUTION <Added>

Do not apply the vehicle weight on the wheel bearing with the driveshaft nut loosened. Otherwise, the wheel bearing may be broken.

Use special tool front hub and flange yoke holder (MB990767) to counter the hub as shown in the figure to remove the driveshaft nut.

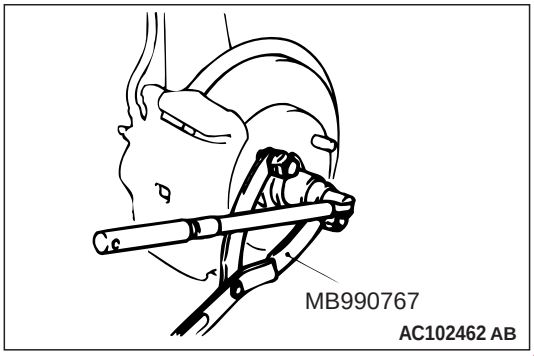

Insert the attached sheet 29 (1/5)

<<B>> STABILIZER LINK DISCONNECTION

Use a hexagon wrench to remove the stabilizer link and strut connection nut as shown in the figure.

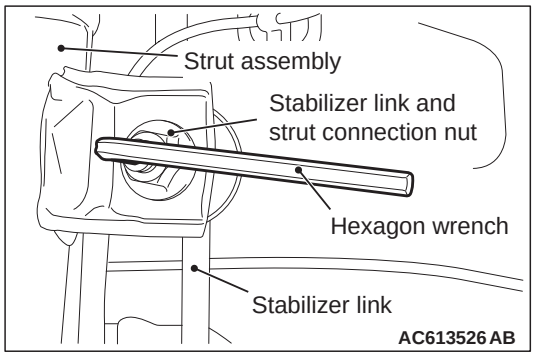

<<C>> SELF-LOCKING NUT (TIE-ROD END CONNECTION) REMOVAL

⚠ CAUTION

- **Loosen the self-locking nut (tie-rod end connection) from the ball joint, but do not remove here. Use the special tool.**
- **To prevent the special tool from dropping off, suspend it with a cord.**

1. Install special tool ball joint remover (MB991897 or MB992011) as shown in the figure.

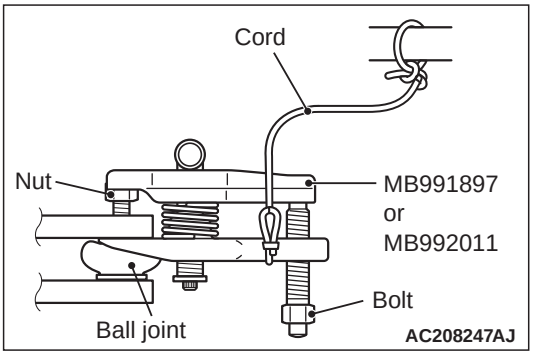

>>B<< STABILIZER LINK CONNECTION

Use a hexagon wrench to install the stabilizer link and strut connection nut as shown in the figure.

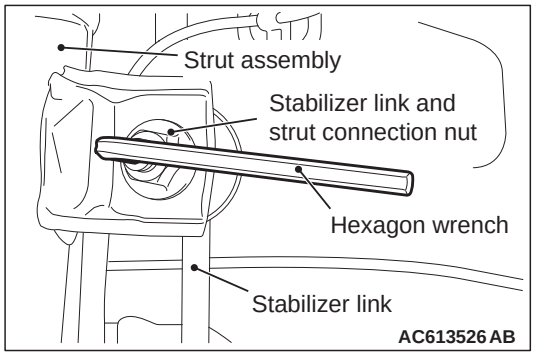

Insert the attached sheet 29 (3/5)

Insert the attached sheet 29 (5/5)

>>C<< WASHER/DRIVESHAFT NUT INSTALLATION <CASTLE NUT TYPE>

<Added>

⚠ CAUTION

Do not apply the vehicle weight on the front wheel hub assembly before fully tightening the driveshaft nut. Otherwise, the wheel bearing may be broken.

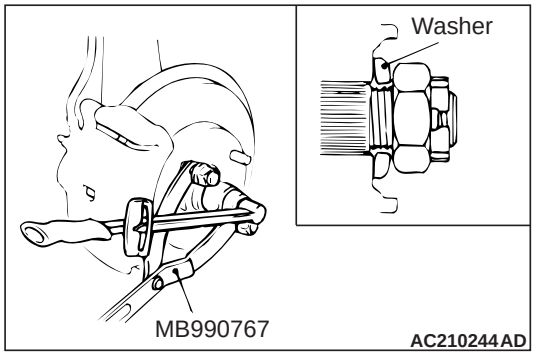

1. Incorporate the driveshaft assembly washer as shown in the illustration.
2. Using special tool front hub and flange yoke holder (MB990767), tighten the driveshaft nuts. At this time, tighten the nuts within the specified torque range considering the final tightening.

   Tightening torque: 144 – 176 N·m
3. If the pin holes do not align with the pins, tighten the driveshaft nut (less than 200 N·m) and find the nearest hole then bend the split pin to fit it.

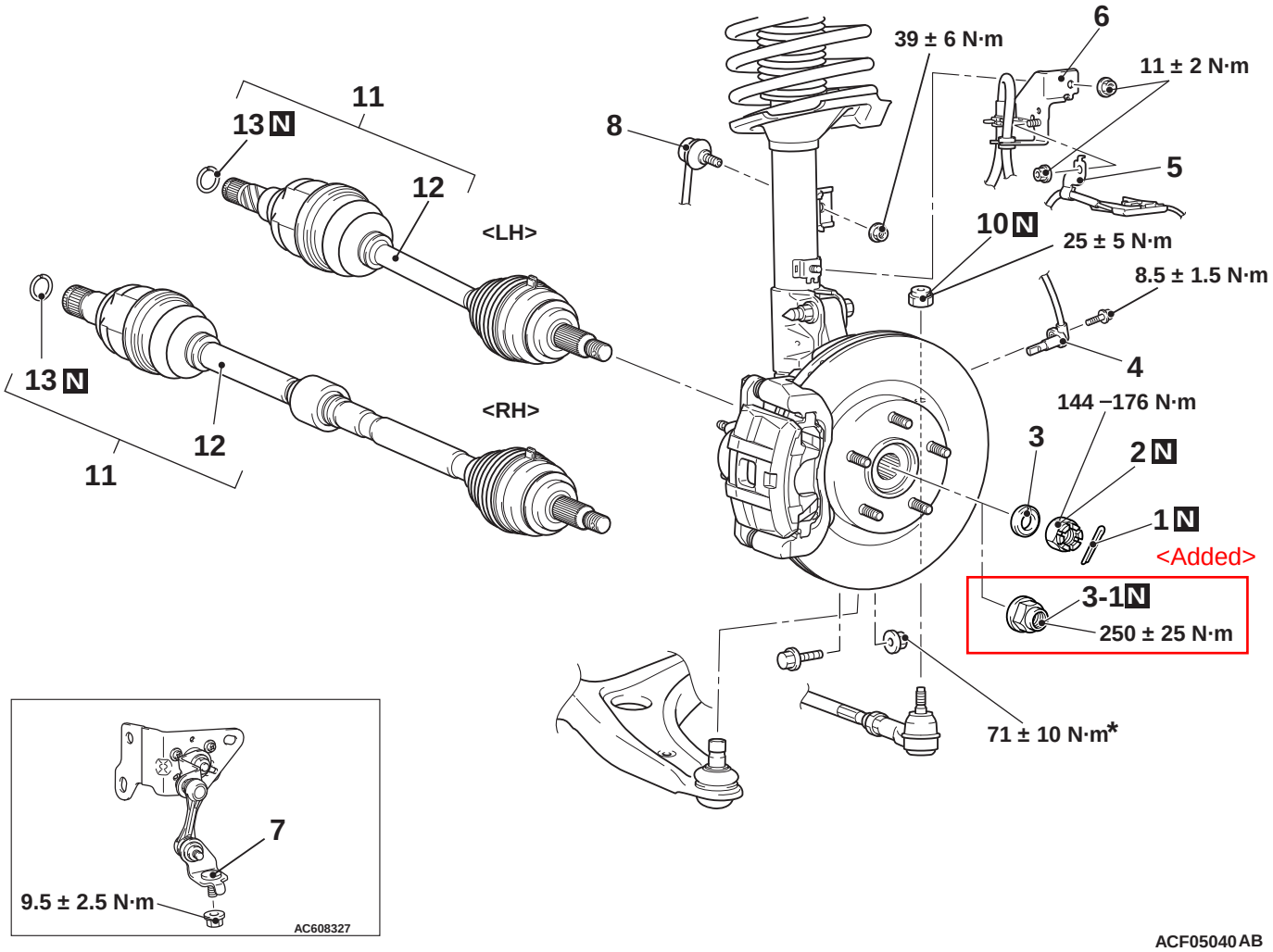

ACF05040AB

Removal steps

1. Split pin <Castle nut type>
2. Front driveshaft nut <Castle nut type>
3. Washer <Castle nut type>
3-1. Driveshaft nut <Flange nut type>
4. Front wheel speed sensor
5. Front wheel speed sensor wiring harness bracket
6. Brake hose bracket

<Added>

Removal steps (Continued)

7. Front height sensor and lower arm connection
8. Stabilizer link joining
9. Nut (lower arm ball joint connection)
10. Self locking nut (tie-rod end connection)
11. Front driveshaft assembly
12. Circlip

REMOVAL SERVICE POINTS

<<A>> FRONT DRIVESHAFT NUT REMOVAL

<CASTLE NUT TYPE> <Added>

⚠ CAUTION

Do not apply the vehicle weight on the wheel bearing with the front driveshaft nut loosened. Otherwise, the wheel bearing may be broken.

Use special tool front hub and flange yoke holder (MB990767) to counter the hub as shown in the figure to remove the front driveshaft nut.

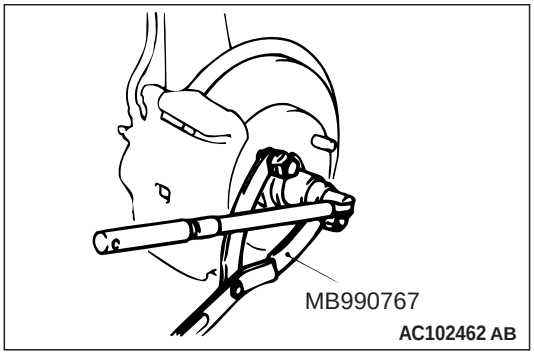

Insert the attached sheet 29 (1/5)

<<B>> SELF LOCKING NUT (TIE-ROD END CONNECTION) REMOVAL

⚠ CAUTION

- **Loosen the self locking nut (tie-rod end connection) from the ball joint, but do not remove here. Use the special tool.**
- **To prevent the special tool from dropping off, suspend it with a cord.**

1. Install special tool ball joint remover (MB991897 or MB992011) as shown in the figure.

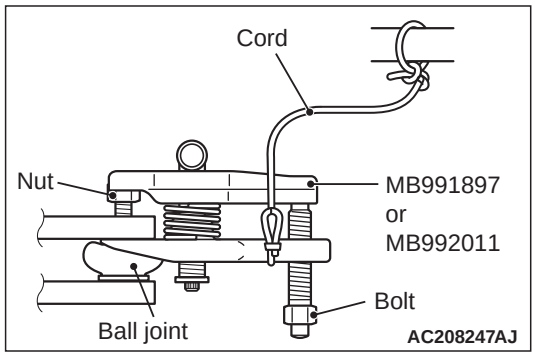

2. Turn the bolt and knob to make the special tool jaws parallel, then hand-tighten the bolt. After tightening, check that the jaws are still parallel.

   NOTE: To adjust the special tool jaws to be parallel, set the orientation of the knob as shown in the figure.

3. Unscrew the bolt to disconnect the ball joint.

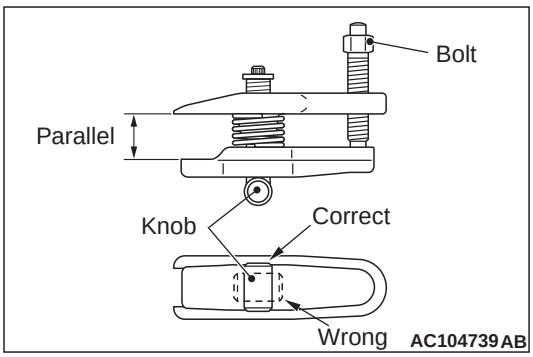

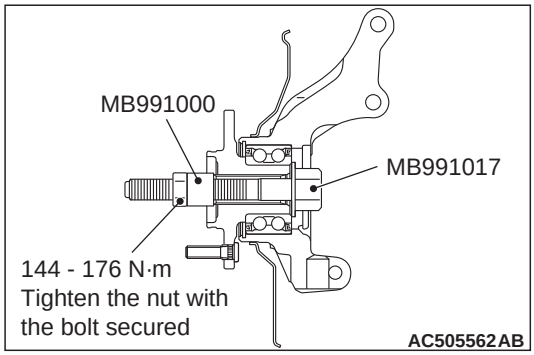

⚠ CAUTION
Do not apply the vehicle weight to the wheel bearing with the front driveshaft assembly removed. If, however, the vehicle weight shall be applied to the bearing (in order to move the vehicle), tighten the following special tools to the specified torque:
- **Spacer (MB991000)**
- **Front hub remover and installer (MB991017)**

INSTALLATION SERVICE POINTS

>>A<< FRONT DRIVESHAFT ASSEMBLY INSTALLATION

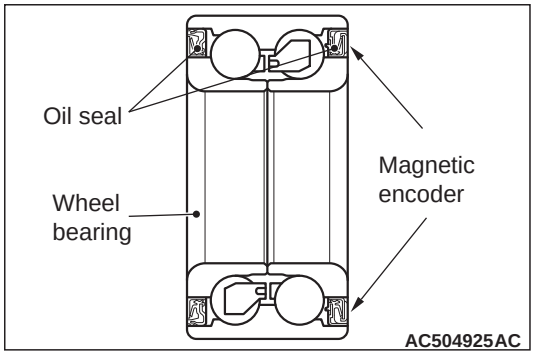

⚠ CAUTION
- **The magnetic encoder collects metallic particles easily, because it is magnetised. Make sure that the magnetic encoder should not collect metallic particles. Check that there is not any trouble prior to reassembling it. In addition, always keep magnetic substances away from the magnetic encoder.**
- **When installing the driveshaft, make sure that it does not contact with the magnetic encoder (integrated with the inner oil seal) to avoid damage.**
- **Care must be taken to ensure that the oil seal of the transmission is not damaged by the spline area of the front driveshaft assembly.**

Insert the attached sheet 29 (2/5)

>>B<< WASHER/FRONT DRIVESHAFT NUT INSTALLATION <CASTLE NUT TYPE>

<Added>

Insert the attached sheet 29 (5/5)

⚠ CAUTION
Do not apply the vehicle weight on the front wheel hub assembly before fully tightening the front driveshaft nut. Otherwise, the wheel bearing may be broken.

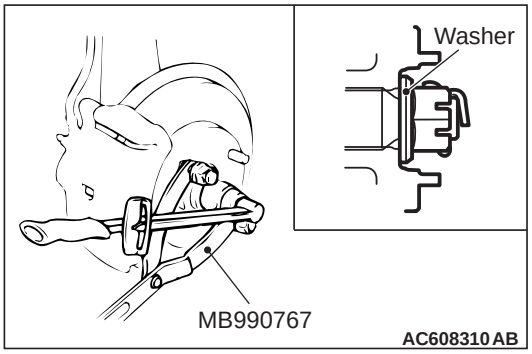

1. Incorporate the front driveshaft assembly washer as shown in the illustration.
2. Use special tool front hub and flange yoke holder (MB990767) to tighten the front driveshaft nut to the specified torque. Tighten it to the lower limit of specified torque in order to align the pin holes.

   Tightening torque: 144 – 176 N·m
3. If the pin holes are not aligned, retighten up to 176 N·m. Set the split pin into the first aligned hole and bend it.

<Petrol>

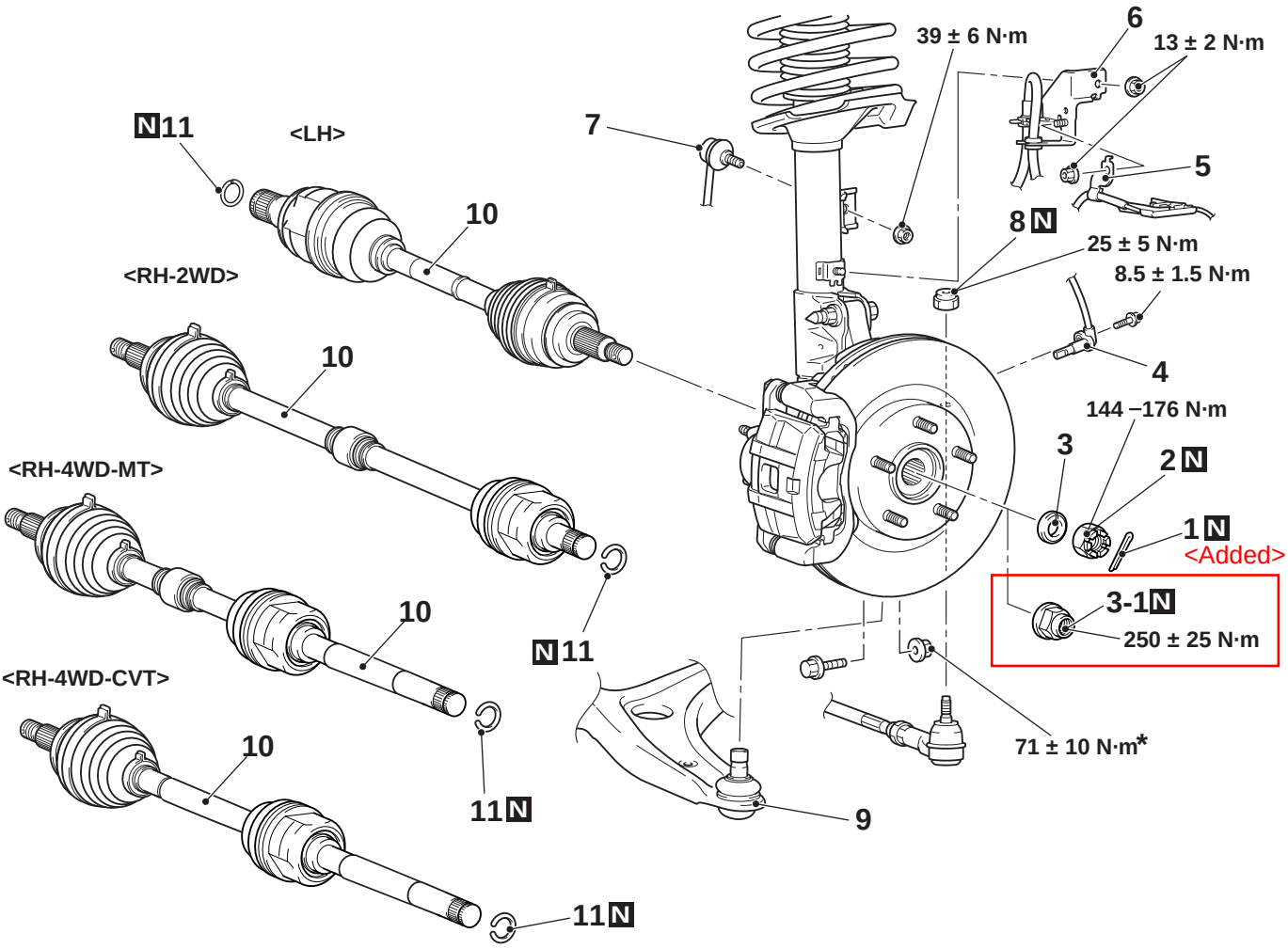

ACF05041AB

Removal steps

- Front height sensor to lower arm connection removal (Refer to GROUP 54A, Height sensor .) <Vehicles with headlamp automatic levelling system>

1. Split pin <Castle nut type>
<<A>> >>B<< 2. Front driveshaft nut <Castle nut type> <Added>
>>B<< 3. Washer <Castle nut type>
<<AA>> >>AA<< 3-1. Driveshaft nut <Flange nut type>

Removal steps (Continued)

4. Front wheel speed sensor (Refer to GROUP 35B – Wheel speed sensor) <Vehicles without ASC > or (Refer to GROUP 35C – Wheel speed sensor) <Vehicles with ASC>
5. Front wheel speed sensor harness clamp
6. Brake hose bracket
7. Stabilizer link connection
<<C>> 8. Self-locking nut (tie-rod end connection)
9. Lower arm ball joint connection
<<D>> >>A<< 10. Driveshaft assembly
11. Circlip

<Diesel>

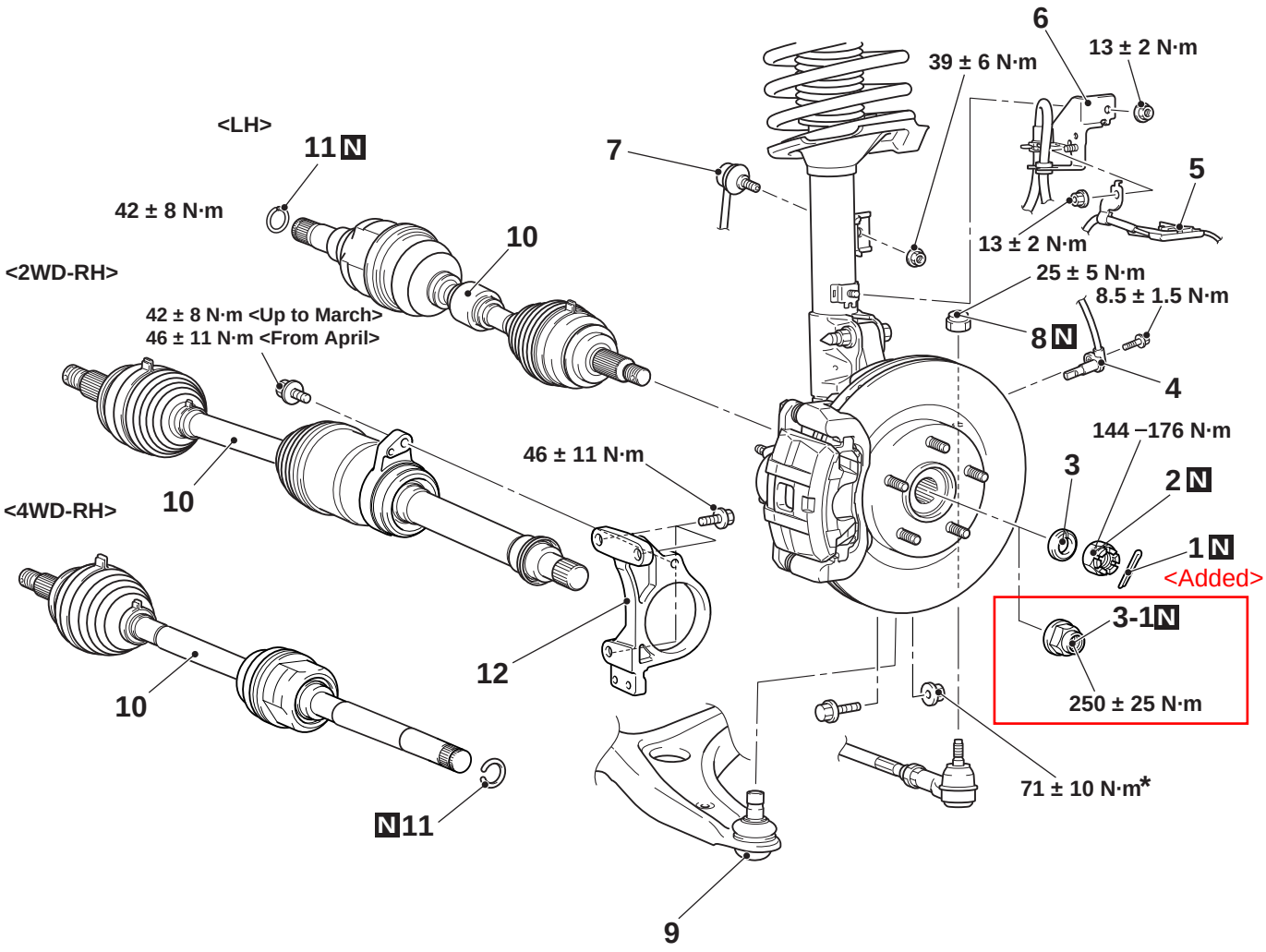

ACF05042AB

Removal steps

- Front height sensor to lower arm connection removal (Refer to GROUP 54A, Height sensor .) <Vehicles with headlamp automatic levelling system>

1. Split pin <Castle nut type>
2. Front driveshaft nut <Castle nut type>
3. Washer <Castle nut type>

3-1. Driveshaft nut <Flange nut type>

4. Front wheel speed sensor (Refer to GROUP 35C, Wheel Speed Sensor)

Removal steps (Continued)

5. Front wheel speed sensor harness clamp
6. Brake hose bracket
7. Stabilizer link connection
8. Self-locking nut (tie-rod end connection)
9. Lower arm ball joint connection
10. Driveshaft assembly
11. Circlip

- Intercooler inlet air pipe A (Refer to GROUP 15 - Intercooler)

12. Adapter bracket

<Petrol>

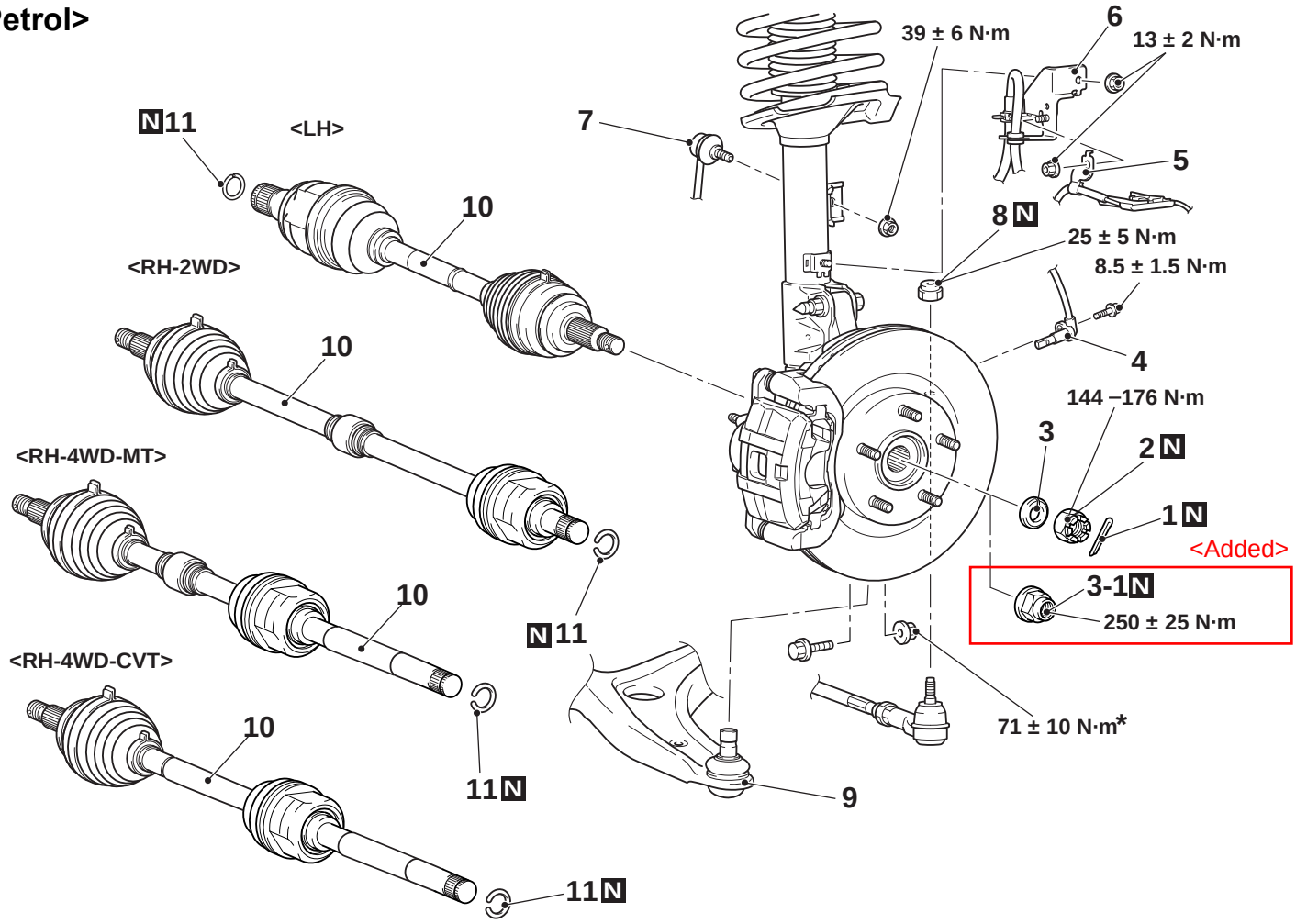

ACF05041AB

Removal steps

- Front height sensor to lower arm connection removal (Refer to GROUP 54A, Height sensor .) <Vehicles with headlamp automatic levelling system>

<<A>> >>B<< 1. Split pin <Castle nut type>
<<A>> >>B<< 2. Front driveshaft nut <Castle nut type>
>>B<< 3. Washer <Castle nut type>
<<AA>> >>AA<< 3-1. Driveshaft nut <Flange nut type>

<Added>

<<B>>

<<C>> >>A<< 10. Driveshaft assembly
11. Circlip

Removal steps (Continued)

4. Front wheel speed sensor (Refer to GROUP 35B – Wheel speed sensor) <Vehicles without ASC > or (Refer to GROUP 35C – Wheel speed sensor) <Vehicles with ASC>
5. Front wheel speed sensor harness clamp
6. Brake hose bracket
7. Stabilizer link connection
8. Self-locking nut (tie-rod end connection)
9. Lower arm ball joint connection

<Diesel>

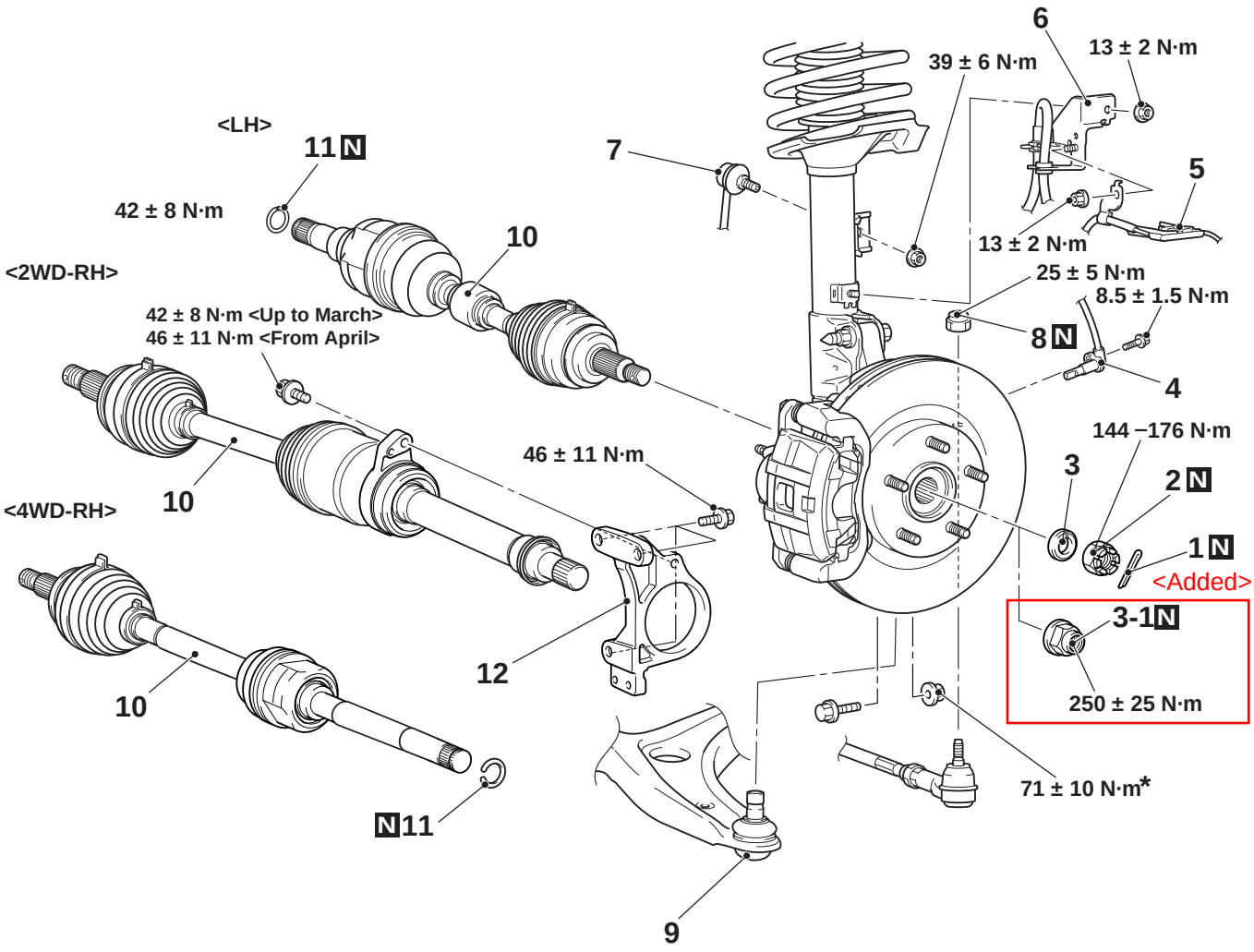

ACF05042AB

Removal steps

- Front height sensor to lower arm connection removal (Refer to GROUP 54A, Height sensor .) <Vehicles with headlamp automatic levelling system>

<<A>> >>B<< 1. Split pin <Castle nut type>
<<A>> >>B<< 2. Front driveshaft nut <Castle nut type>
>>B<< 3. Washer <Castle nut type>
<<AA>> >>AA<< 3-1. Driveshaft nut <Flange nut type>
4. Front wheel speed sensor (Refer to GROUP 35C, Wheel Speed Sensor)

<<B>> <Added>
<<DC>> >>A<<

Removal steps (Continued)

5. Front wheel speed sensor harness clamp
6. Brake hose bracket
7. Stabilizer link connection
8. Self-locking nut (tie-rod end connection)
9. Lower arm ball joint connection
10. Driveshaft assembly
11. Circlip

- Intercooler inlet air pipe A (Refer to GROUP 15 - Intercooler)

REMOVAL SERVICE POINTS

<<A>> DRIVESHAFT NUT REMOVAL <CASTLE NUT TYPE>

<Added>

⚠ CAUTION

Do not apply the vehicle weight on the wheel bearing with the driveshaft nut loosened. Otherwise, the wheel bearing may be broken.

Use special tool front hub and flange yoke holder (MB990767) to counter the hub as shown in the figure to remove the driveshaft nut.

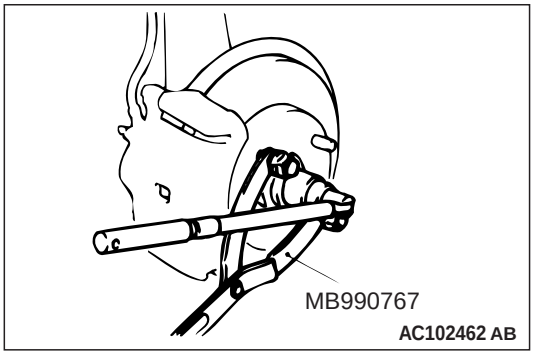

<<B>> SELF-LOCKING NUT (TIE-ROD END CONNECTION) REMOVAL

⚠ CAUTION

- **Loosen the self-locking nut (tie-rod end connection) from the ball joint, but do not remove here. Use the special tool.**
- **To prevent the special tool from dropping off, suspend it with a cord.**

1. Install special tool ball joint remover (MB991897 or MB992011) as shown in the figure.

Insert the attached sheet 29 (1/5)

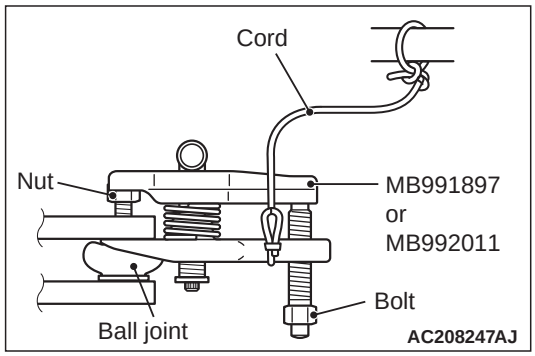

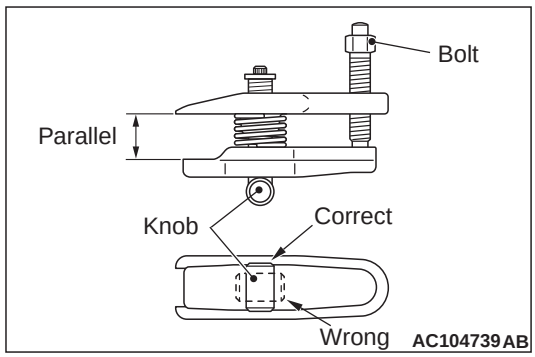

2. Turn the bolt and knob to make the special tool jaws parallel, then hand-tighten the bolt. After tightening, check that the jaws are still parallel.

   NOTE: To adjust the special tool jaws to be parallel, set the orientation of the knob as shown in the figure.

3. Unscrew the bolt to disconnect the ball joint.

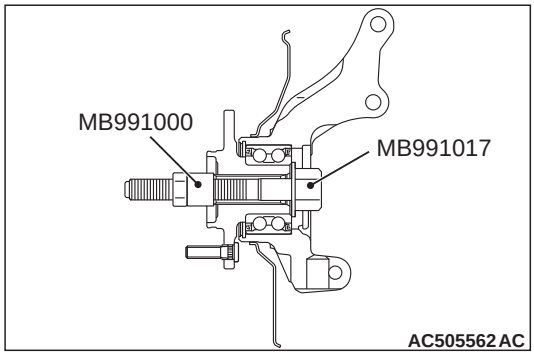

⚠ CAUTION
Do not apply the vehicle weight to the wheel bearing with the driveshaft assembly removed. If, however, the vehicle weight shall be applied to the bearing (in order to move the vehicle), tighten the following special tools to the specified torque (144 – 176 N·m):

- **Spacer (MB991000)**
- **Front hub remover and installer (MB991017)**

INSTALLATION SERVICE POINTS

>>A<< DRIVESHAFT ASSEMBLY INSTALLATION

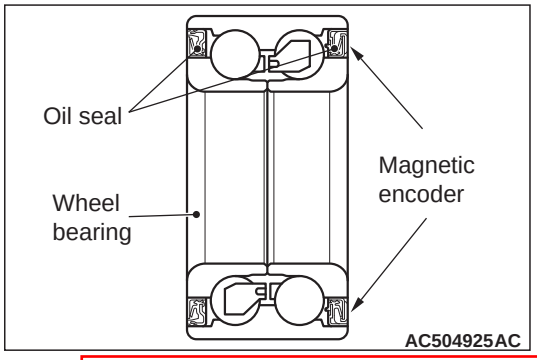

⚠ CAUTION

- **The wheel speed detection magnetic encoder collects metallic particles easily, because it is magnetised. Make sure that the magnetic encoder should not collect metallic particles. Check that there is not any trouble prior to reassembling it.**
- **When installing the driveshaft, make sure that it does not contact with the wheel speed detection magnetic encoder (integrated with the inner oil seal) to avoid damage.**
- **Care must be taken to ensure that the oil seal of the transmission is not damaged by the spline part of the driveshaft assembly.**

Insert the attached sheet 29 (2/5)

>>B<< WASHER/DRIVESHAFT NUT INSTALLATION <CASTLE NUT TYPE>

<Added>

Insert the attached sheet 29 (5/5)

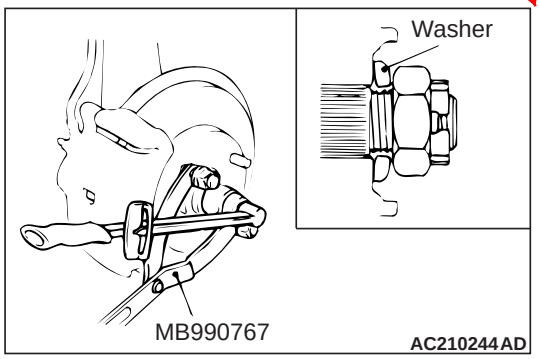

⚠ CAUTION
Do not apply the vehicle weight on the front wheel hub assembly before fully tightening the driveshaft nut. Otherwise, the wheel bearing may be broken.

1. Incorporate the driveshaft assembly washer as shown in the illustration.
2. Using special tool front hub and flange yoke holder (MB990767), tighten the driveshaft nuts. At this time, tighten the nuts within the specified torque range considering the final tightening.

   Tightening torque: 144 – 176 N·m
3. If the pin holes do not align with the pins, tighten the driveshaft nut (less than 200 N·m) and find the nearest hole then bend the split pin to fit it.

<Vehicles for Europe (Except for Russia): except RALLIART>

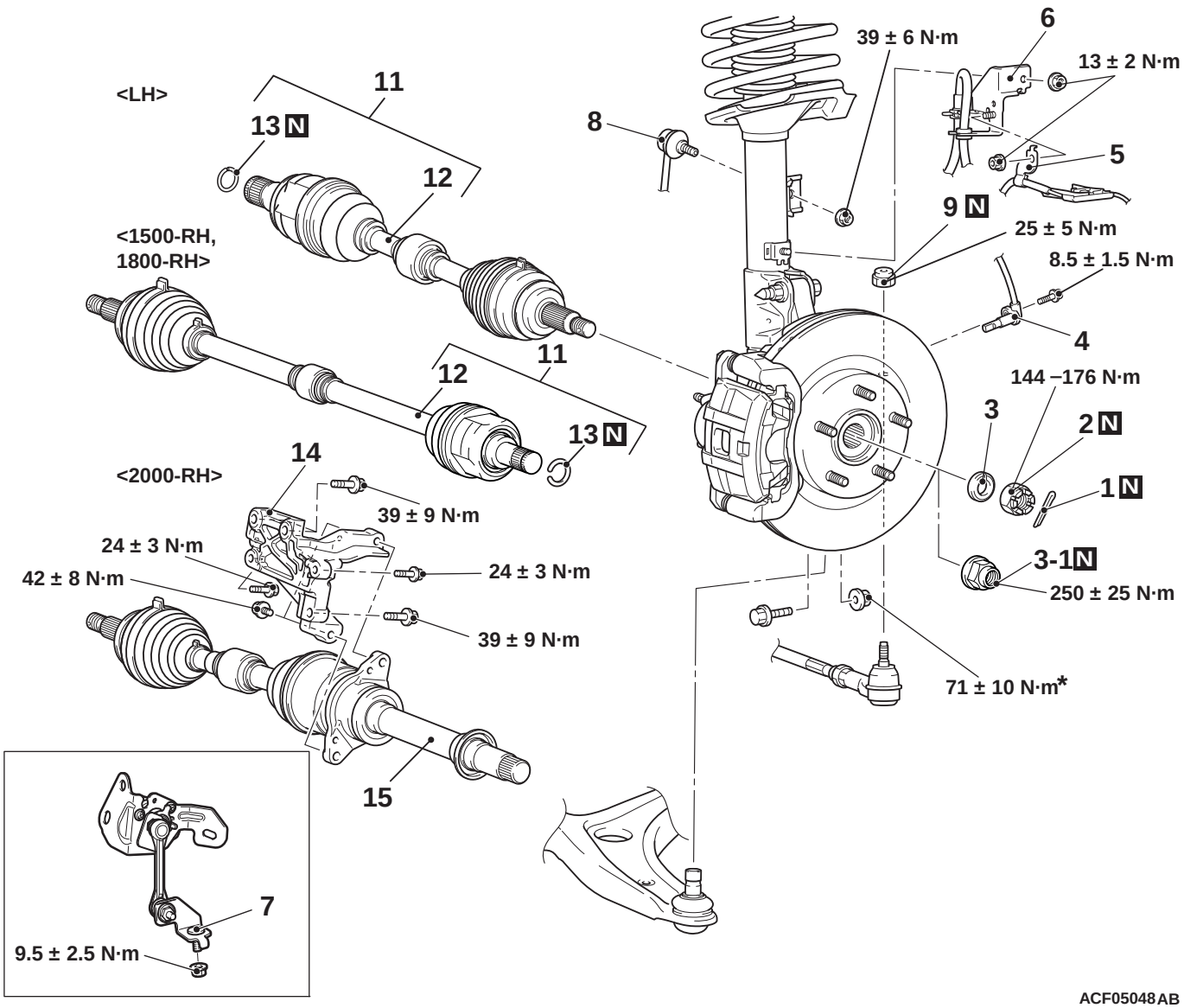

ACF05048AB

Removal steps

		1.	Split pin <Castle nut type>
<<A>>	>>D<<	2.	Front driveshaft nut <Castle nut type>
	>>D<<	3.	Washer <Castle nut type>
<<AA>>	>>CA<<	3-1.	Driveshaft nut <Flange nut type>
		4.	Front wheel speed sensor
		5.	Front wheel speed sensor harness clamp
		6.	Brake hose bracket
		7.	Front height sensor to lower arm connection <Vehicles with headlamp automatic levelling system>
<<B>>	>>C<<	8.	Stabilizer link connection

<Added>

Removal steps (Continued)

	<<C>>	9.	Self-locking nut (tie-rod end connection)
		10.	Flange nut (lower arm ball joint connection)
	<<D>> >>A<<	11.	Driveshaft assembly <LH, 1500-RH, 1800-RH>
		12.	Driveshaft
		13.	Circlip
	>>B<<	14.	Adapter bracket assembly
	>>A<<	15.	Driveshaft assembly <2000-RH>

<Vehicles for Russia: except RALLIART>

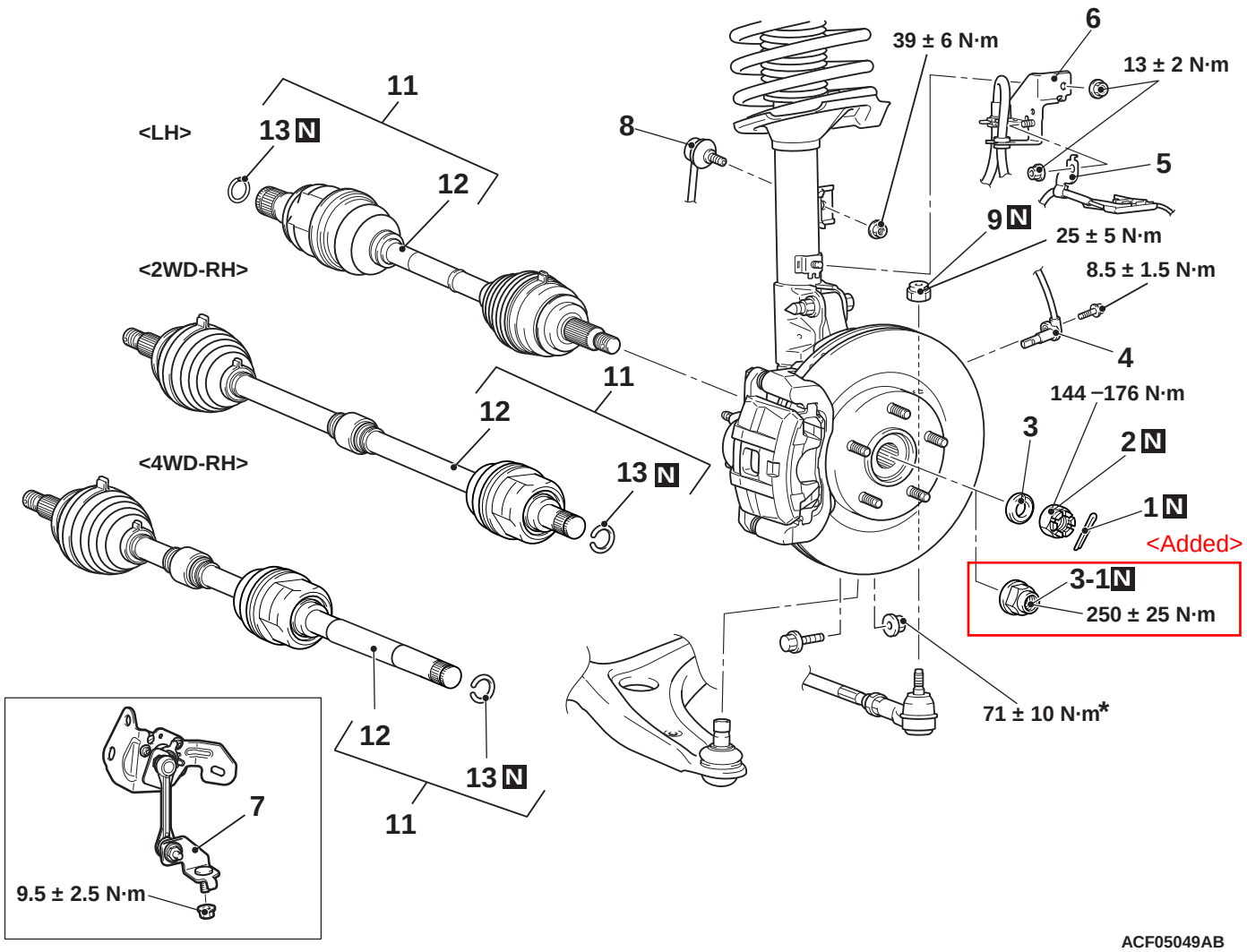

ACF05049AB

Removal steps

1. Split pin <Castle nut type>
2. Front driveshaft nut <Castle nut type>
3. Washer <Castle nut type>

<Added>

3-1. Driveshaft nut <Flange nut type>

4. Front wheel speed sensor
5. Front wheel speed sensor harness clamp
6. Brake hose bracket

Removal steps (Continued)

7. Front height sensor to lower arm connection <Vehicles with headlamp automatic levelling system>
8. Stabilizer link connection
9. Self-locking nut (tie-rod end connection)
10. Flange nut (lower arm ball joint connection)
11. Driveshaft assembly
12. Driveshaft
13. Circlip

<RALLIART>

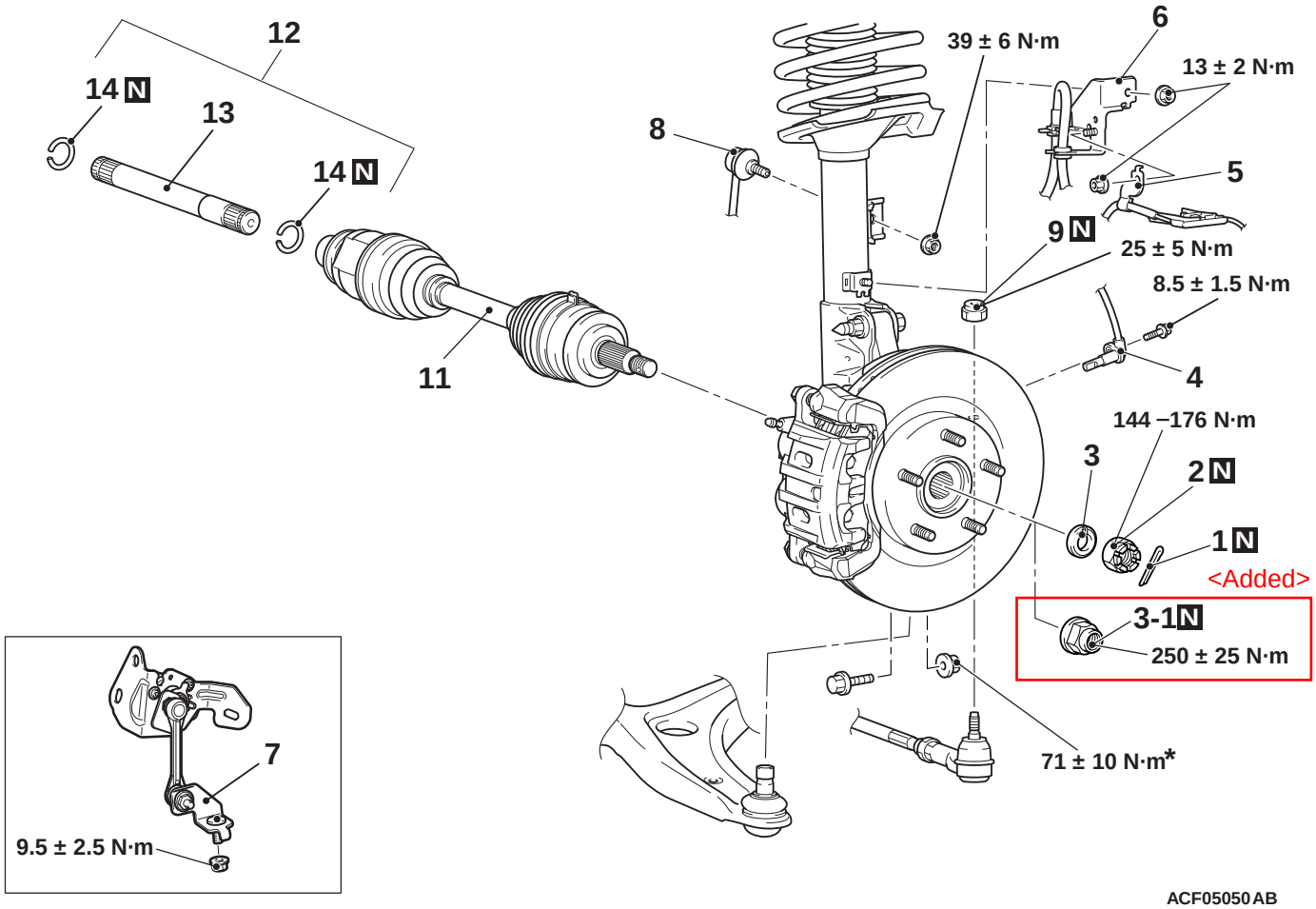

ACF05050AB

Removal steps

		1. Split pin <Castle nut type>	
<<A>>	>>D<<	2. Front driveshaft nut <Castle nut type>	<Added>
	>>D<<	3. Washer <Castle nut type>	
<<AA>>	>>CA<<	3-1. Driveshaft nut <Flange nut type>	
		4. Front wheel speed sensor	
		5. Front wheel speed sensor harness clamp	
		6. Brake hose bracket	
<<B>>	>>C<<		
<<C>>			
<<D>>	>>A<<		
<<E>>	>>A<<		

Removal steps

7. Front height sensor to lower arm connection <Vehicles with headlamp automatic levelling system>
8. Stabilizer link connection
9. Self-locking nut (tie-rod end connection)
10. Flange nut (lower arm ball joint connection)
11. Driveshaft assembly
12. Output shaft assembly (RH)
13. Output shaft (RH)
14. Circlip

REMOVAL SERVICE POINTS

<<A>> FRONT DRIVESHAFT NUT REMOVAL <CASTLE NUT TYPE>

<Added>

⚠ CAUTION

Do not apply the vehicle weight on the wheel bearing with the driveshaft nut loosened. Otherwise, the wheel bearing may be broken.

Use special tool front hub and flange yoke holder (MB990767) to counter the hub as shown in the figure to remove the driveshaft nut.

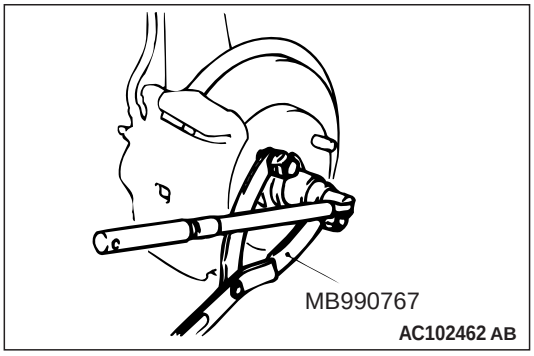

Insert the attached sheet 29 (1/5)

<<B>> STABILIZER LINK DISCONNECTION

Use a hexagon wrench to remove the stabilizer link and strut connection nut as shown in the figure.

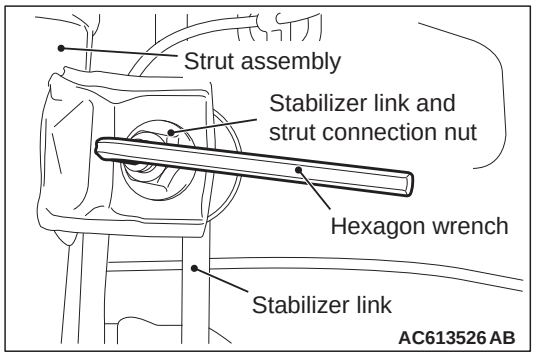

<<C>> SELF-LOCKING NUT (TIE-ROD END CONNECTION) REMOVAL

⚠ CAUTION

- **Loosen the self-locking nut (tie-rod end connection) from the ball joint, but do not remove here. Use the special tool.**
- **To prevent the special tool from dropping off, suspend it with a cord.**

1. Install special tool ball joint remover (MB991897 or MB992011) as shown in the figure.

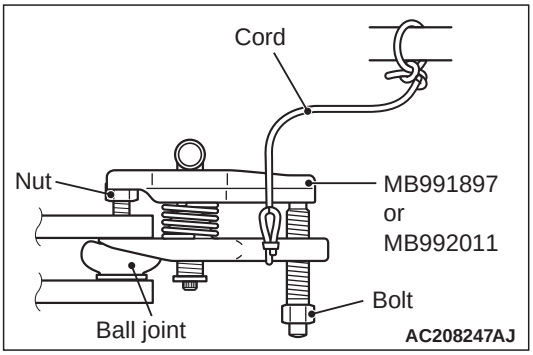

INSTALLATION SERVICE POINTS

>>A<< OUTPUT SHAFT ASSEMBLY (RH)/DRIVE-SHAFT ASSEMBLY INSTALLATION

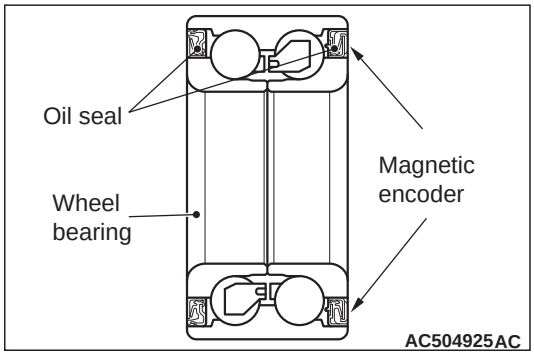

⚠ CAUTION

- **The magnetic encoder collects metallic particles easily, because it is magnetised. Make sure that the magnetic encoder should not collect metallic particles. Check that there is not any trouble prior to reassembling it..**
- **When installing the driveshaft, make sure that it does not contact with the magnetic encoder (integrated with the inner oil seal) to avoid damage.**
- **Care must be taken to ensure that the oil seal of the transmission is not damaged by the spline part of the output shaft assembly or driveshaft assembly.**

>>B<< ADAPTER BRACKET ASSEMBLY INSTALLATION

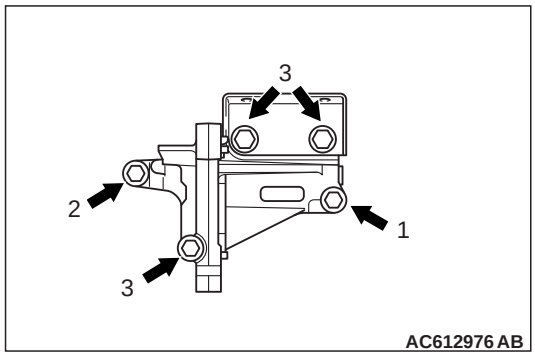

Tighten the mounting bolts in a sequence order as shown in the figure.

>>C<< STABILIZER LINK CONNECTION

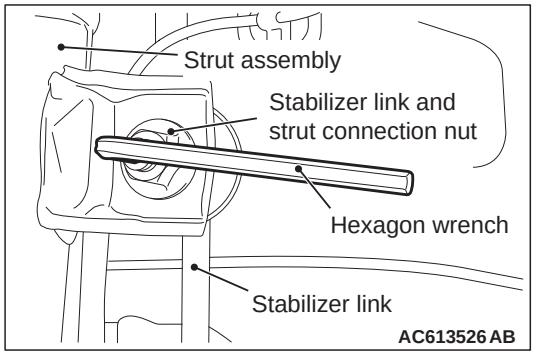

Use a hexagon wrench to install the stabilizer link and strut connection nut as shown in the figure.

Insert the attached sheet 29 (4/5)

Insert the attached sheet 29 (5/5)

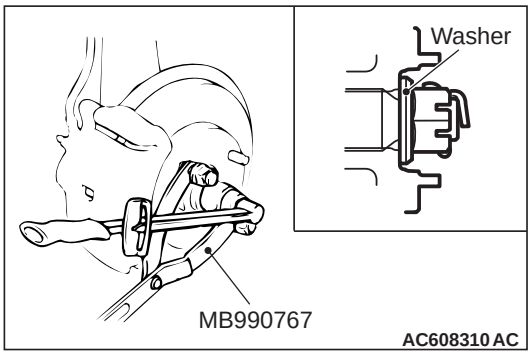

>>D<< WASHER/DRIVESHAFT NUT INSTALLATION <CASTLE NUT TYPE>

<Added>

⚠ CAUTION

Do not apply the vehicle weight on the front wheel hub assembly before fully tightening the driveshaft nut. Otherwise, the wheel bearing may be broken.

1. Incorporate the driveshaft assembly washer as shown in the illustration.
2. Using special tool front hub and flange yoke holder (MB990767), tighten the driveshaft nut. At this time, tighten the nut to the specified lower limit torque so that the pin hole may align with split pin.

   Tightening torque: 144 – 176 N·m
3. If the pin hole does not align with the pin, tighten the driveshaft nut (less than 176 N·m) and find the nearest hole, then fit the split pin.

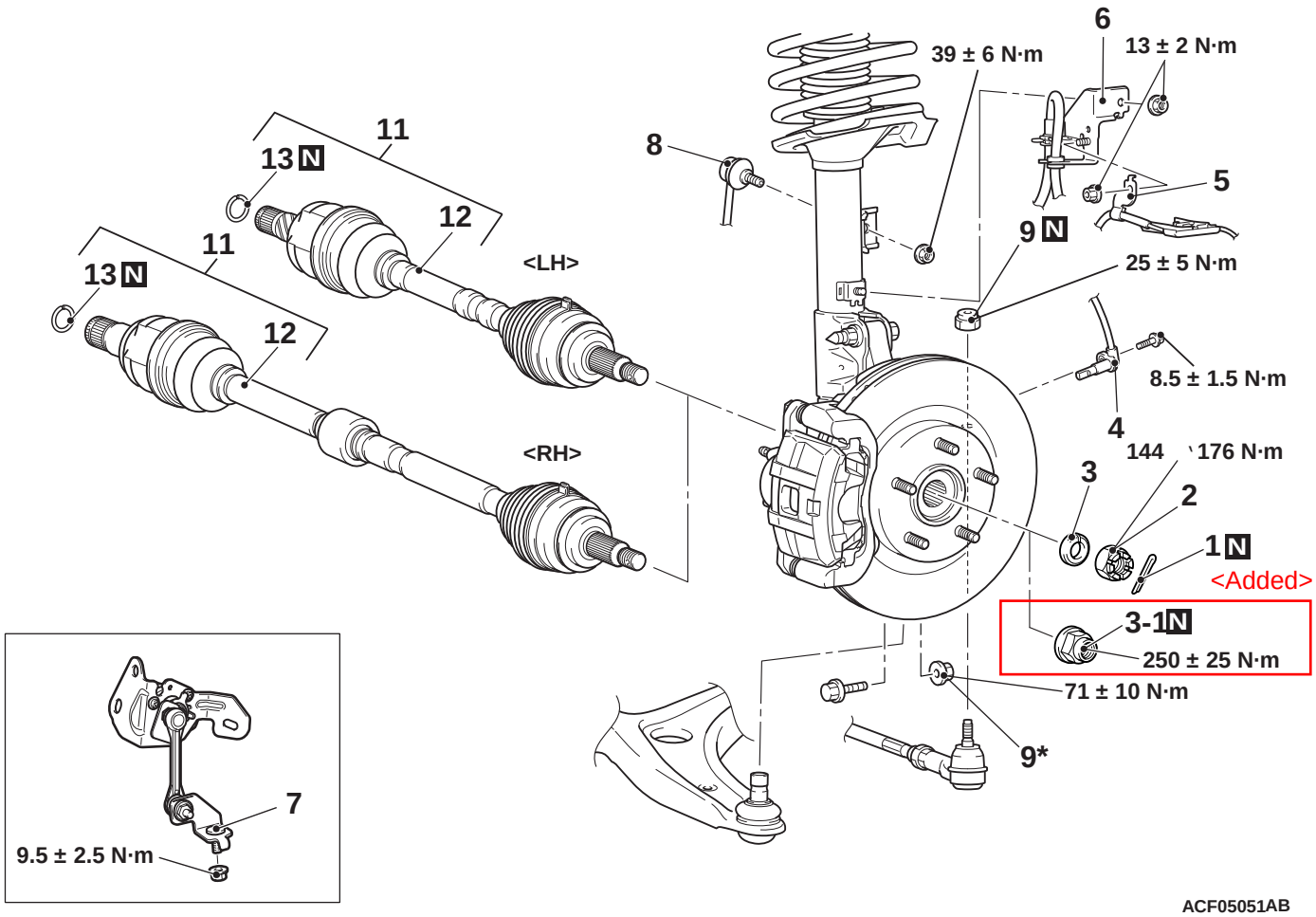

ACF05051AB

Removal steps

1. Front driveshaft nut <Castle nut type>
2. Washer <Castle nut type>
3. Front driveshaft nut <Castle nut type>

<Added>

3-1. Driveshaft nut <Flange nut type>

4. Front wheel speed sensor <Vehicles with ABS>
5. Front wheel speed sensor harness clamp <Vehicles with ABS>
6. Brake hose bracket

Removal steps

7. Front height sensor to lower arm connection <Vehicles with headlamp automatic levelling system>
8. Stabilizer link connection
9. Self-locking nut (tie-rod end connection)
10. Flange nut (lower arm ball joint connection)
11. Driveshaft assembly
12. Driveshaft
13. Circlip

REMOVAL SERVICE POINTS

<<A>> DRIVESHAFT NUT REMOVAL <CASTLE NUT TYPE>

<Added>

⚠ CAUTION

Do not apply the vehicle weight on the wheel bearing with the driveshaft nut loosened. Otherwise, the wheel bearing may be broken.

Use special tool front hub and flange yoke holder (MB990767) to counter the hub as shown in the figure to remove the driveshaft nut.

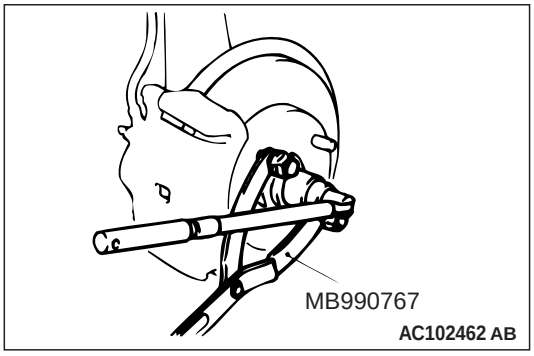

Insert the attached sheet 29 (1/5)

<<B>> STABILIZER LINK DISCONNECTION

Use a hexagon wrench to remove the stabilizer link and strut connection nut as shown in the figure.

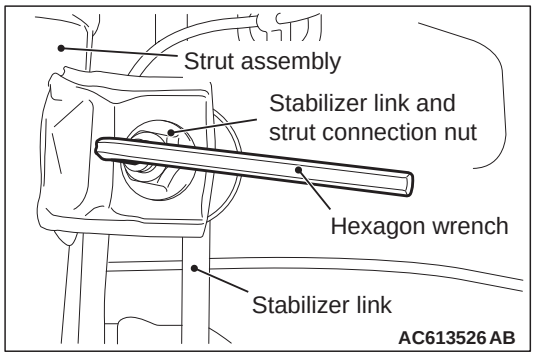

<<C>> SELF-LOCKING NUT (TIE-ROD END CONNECTION) REMOVAL

⚠ CAUTION

- **Loosen the self-locking nut (tie-rod end connection) from the ball joint, but do not remove here. Use the special tool.**
- **To prevent the special tool from dropping off, suspend it with a cord.**

1. Install special tool ball joint remover (MB991897 or MB992011) as shown in the figure.

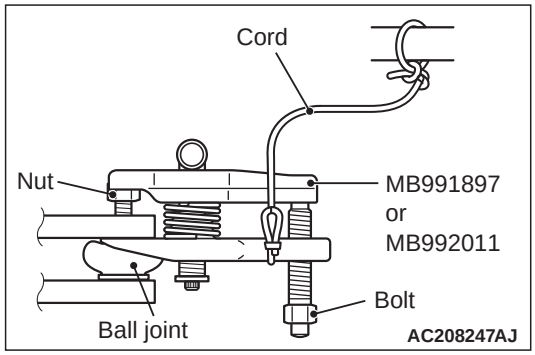

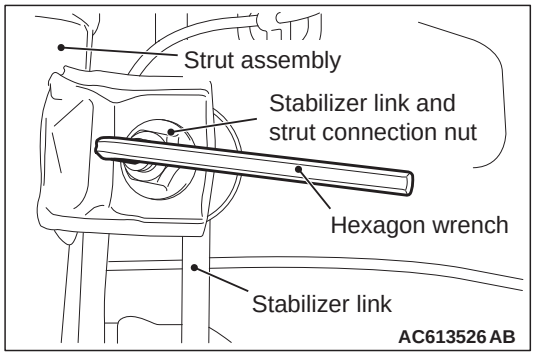

>>B<< STABILIZER LINK CONNECTION

Use a hexagon wrench to install the stabilizer link and strut connection nut as shown in the figure.

Insert the attached sheet 29 (3/5)

Insert the attached sheet 29 (5/5)

>>C<< WASHER/DRIVESHAFT NUT INSTALLATION <CASTLE NUT TYPE>

<Added>

⚠ CAUTION

Do not apply the vehicle weight on the front wheel hub assembly before fully tightening the driveshaft nut. Otherwise, the wheel bearing may be broken.

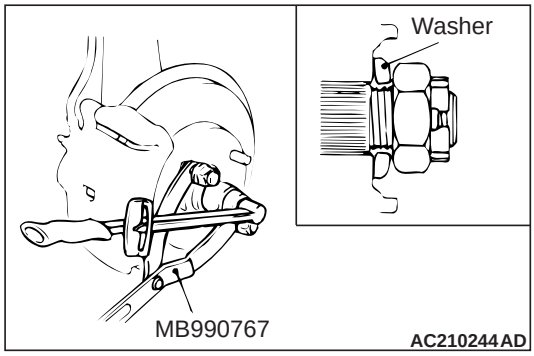

1. Incorporate the driveshaft assembly washer as shown in the illustration.
2. Using special tool front hub and flange yoke holder (MB990767), tighten the driveshaft nut. At this time, tighten the nut to the specified lower limit torque so that the pin hole may align with split pin.

   Tightening torque: 144 - 176 N·m
3. If the pin hole does not align with the pin, tighten the driveshaft nut (less than 176 N·m) and find the nearest hole, then fit the split pin.

<Added>

<<A-1>> DRIVESHAFT NUT REMOVAL <FLANGE NUT TYPE>

1. The staked portion of the driveshaft nut must face upwards.

⚠ CAUTION

- **Make sure that the lock nut chisel is set in the correct direction. Otherwise, the groove or thread in the driveshaft may be broken, or the tip of the chisel may be chipped.**
- **Never use a chisel which tip is damaged.**
- **For how to use the lock nut chisel, refer to the manufacturer's operating instructions.**

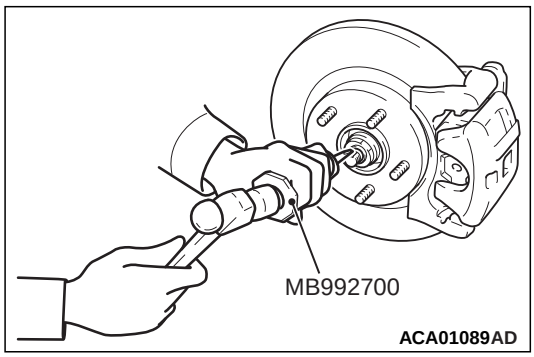

2. Set the special tool Lock Nut Chisel (MB992700) in the groove of the driveshaft with its UPPER mark facing upwards. Then strike the staked portion of the driveshaft nut with the chisel and a hammer to raise up.

⚠ CAUTION

Be careful not to damage the thread of the driveshaft.

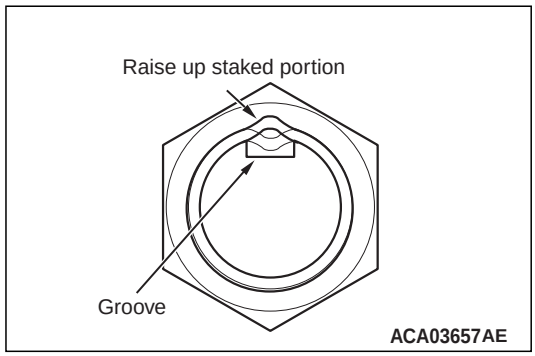

3. Raise up the staked portion of the driveshaft nut until it does not interfere with the shaft thread.

⚠ CAUTION

- **Never use a impact wrench to loosen the driveshaft nut.**
- **Do not apply the vehicle weight on the wheel bearing with the driveshaft nut loosened. Otherwise, the wheel bearing may be broken.**

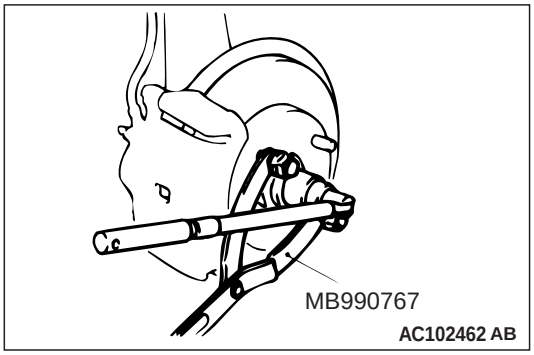

4. Use special tool front hub and flange yoke holder (MB990767) to counter the hub as shown in the figure to remove the driveshaft nut.

<Added>

>>A-1<< DRIVESHAFT NUT INSTALLATION <FLANGE NUT TYPE>

⚠ CAUTION

Do not apply the vehicle weight on the front wheel hub assembly before fully tightening the driveshaft nut. Otherwise, the wheel bearing may be broken.

1. Check the hub seated surface for damage or corrosion. Whenever solvent is used for removing the corrosion, the surface should be degreased.
2. Apply the grease as shown and then insert the drive shaft assembly into the front hub.

   Specified grease: Shell Alvania Grease HDX or Dowcorning/Molykote BR2 Plus
   Amount to use: As required (About 1.0 – 1.5 g)
3. Check that the new driveshaft nut can be turned smoothly by hand. Then tighten it until it is seated.

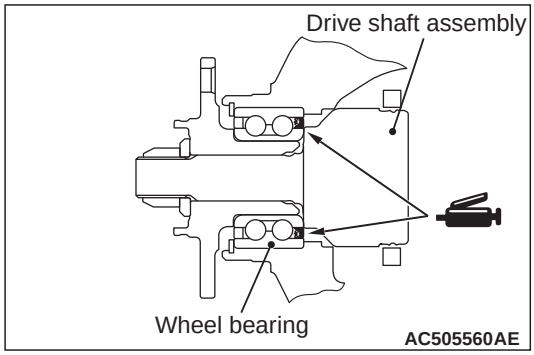

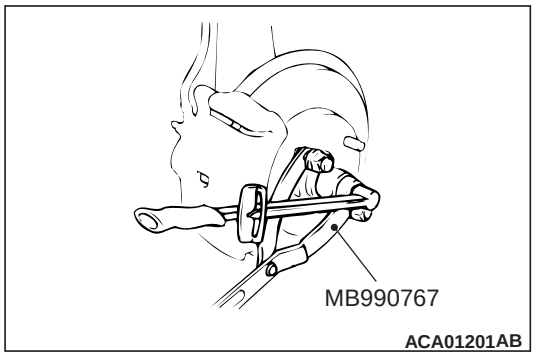

4. Using special tool front hub and flange yoke holder (MB990767), tighten the driveshaft nut.

   Tightening torque: 250 ± 25 N·m
5. After tightening to the specified torque, check that the nut is seated securely.

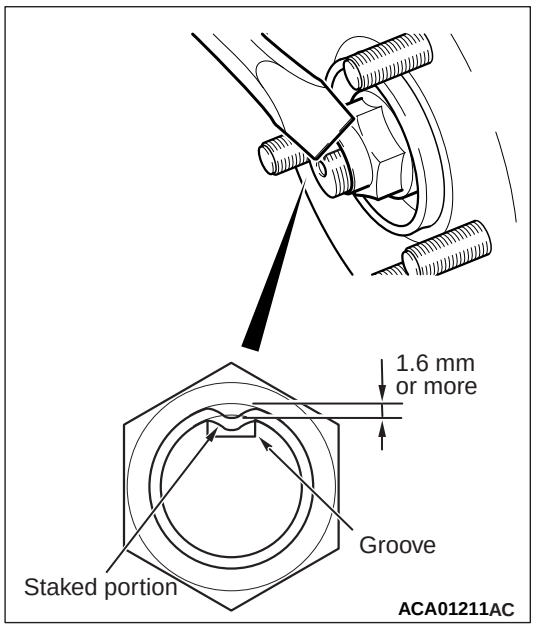

6. Use the chisel and a hammer to stake the nut until the centre in the staked portion reaches the shown dimension.
7. Finally, check that the nut is not cracked at its staked portion.

<Added>

>>B-1<< DRIVESHAFT NUT INSTALLATION <FLANGE NUT TYPE>

⚠ CAUTION

Do not apply the vehicle weight on the front wheel hub assembly before fully tightening the driveshaft nut. Otherwise, the wheel bearing may be broken.

1. Check the hub seated surface for damage or corrosion. Whenever solvent is used for removing the corrosion, the surface should be degreased.
2. Apply the grease as shown and then insert the drive shaft assembly into the front hub.

   Specified grease: Shell Alvania Grease HDX or Dowcorning/Molykote BR2 Plus
   Amount to use: As required (About 1.0 – 1.5 g)
3. Check that the new driveshaft nut can be turned smoothly by hand. Then tighten it until it is seated.

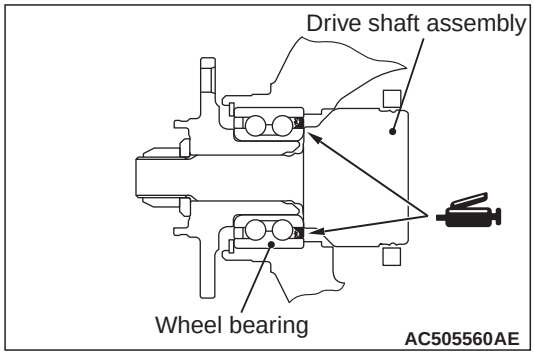

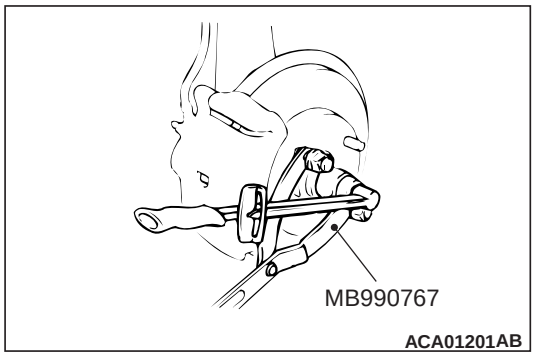

4. Using special tool front hub and flange yoke holder (MB990767), tighten the driveshaft nut.

   Tightening torque: 250 ± 25 N·m
5. After tightening to the specified torque, check that the nut is seated securely.

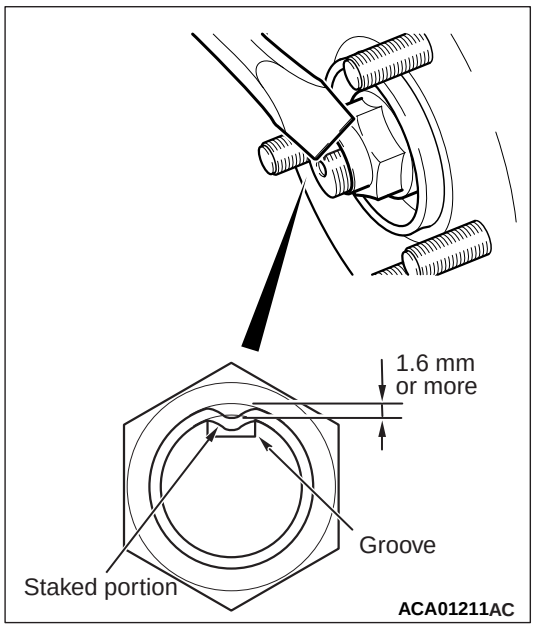

6. Use the chisel and a hammer to stake the nut until the centre in the staked portion reaches the shown dimension.
7. Finally, check that the nut is not cracked at its staked portion.

<Added>

>>C-1<< DRIVESHAFT NUT INSTALLATION <FLANGE NUT TYPE>

⚠ CAUTION

Do not apply the vehicle weight on the front wheel hub assembly before fully tightening the driveshaft nut. Otherwise, the wheel bearing may be broken.

1. Check the hub seated surface for damage or corrosion. Whenever solvent is used for removing the corrosion, the surface should be degreased.
2. Apply the grease as shown and then insert the drive shaft assembly into the front hub.

   Specified grease: Shell Alvania Grease HDX or Dowcorning/Molykote BR2 Plus
   Amount to use: As required (About 1.0 – 1.5 g)
3. Check that the new driveshaft nut can be turned smoothly by hand. Then tighten it until it is seated.

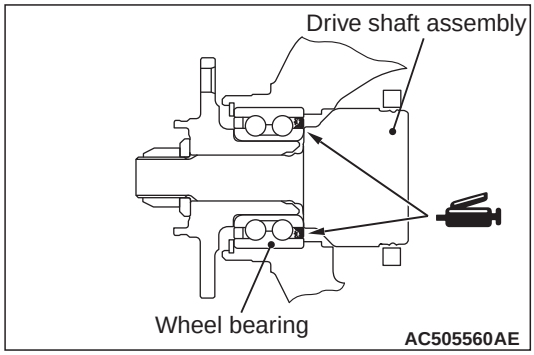

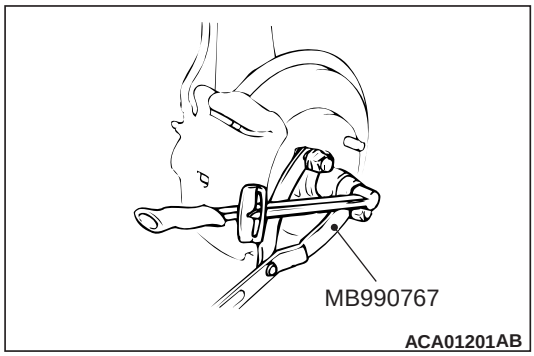

4. Using special tool front hub and flange yoke holder (MB990767), tighten the driveshaft nut.

   Tightening torque: 250 ± 25 N·m
5. After tightening to the specified torque, check that the nut is seated securely.

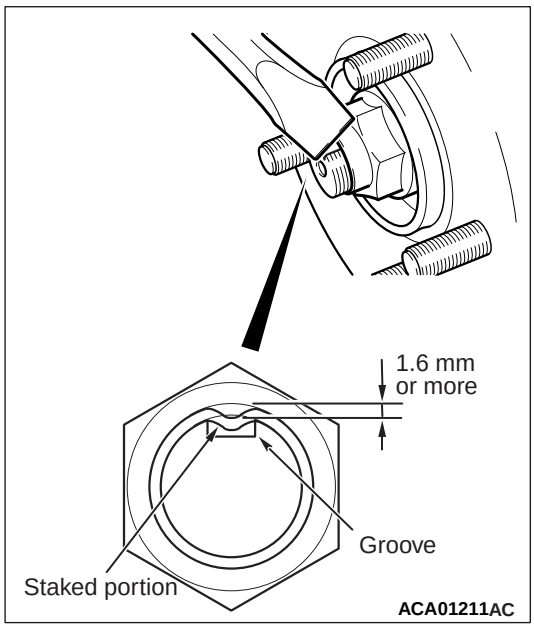

6. Use the chisel and a hammer to stake the nut until the centre in the staked portion reaches the shown dimension.
7. Finally, check that the nut is not cracked at its staked portion.

<Added>

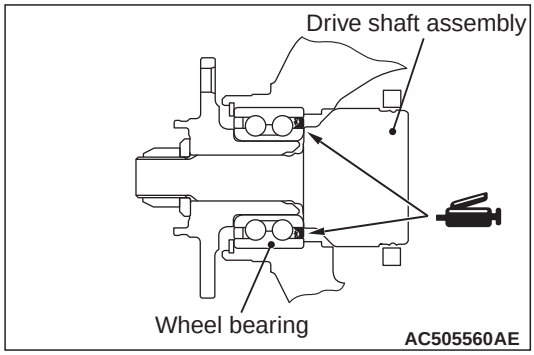

1-1. Apply the grease as shown and then insert the drive shaft assembly into the front hub.

Specified grease: Shell Alvania Grease HDX or Dowcorning/Molykote BR2 Plus
Amount to use: As required (About 1.0 – 1.5 g)