SERVICE BULLETIN

MITSUBISHI MOTORS

GLOBAL AFTER SALES OFFICE, MITSUBISHI MOTORS CORPORATION

PURPOSE : CHANGE	ISSUE NO. : MSB-16EXML26_27-001	DATE : 2016-01-28
SUBJECT : Changes of the driveshaft nut installation procedure for the Improvement of the availability and reliability of the grease		<DESTINATION/MODEL> (As per attached sheet 1) <M/Y> 13-16
GROUP : Gr:26(Front axle)/Gr:27(Rear axle)		OUTLANDER(GF0W)/ OUTLANDER PHEV(GG0W)

1. Description :

Please refer to the attached document for the information about the change of mention in the applicable service manual.

2. Affected service manuals :

Please refer to the attached document (Attached sheet 1)

3. About the details :

Please refer to the attached document (Attached sheet 8-21)

4. Timing of implementation : From the initial vehicles of the related models.

Attached sheet 1

For overseas market

EU/RUSSIA/ARGENTINA/SOUTH AFRICA

Applicable manual	Pub. No.	Applicable title (Info-ID)	Contents
2013 OUTLANDER Workshop Manual	CGFE13E1-CD (English) CGFF13E1-CD (French) CGFG13E1-CD (German) CGFS13E1-CD (Spanish) CGFI13E1-CD (Italian) N/A (RUSSIA)	LUBRICANT(S) (M261-00-041-84600-01)	Attached sheet 8
		DRIVESHAFT ASSEMBLY REMOVAL AND INSTALLATION (M261-00-352-44700-01)	Attached sheet 9
2014 OUTLANDER/ OUTLANDER PHEV Workshop Manual	CGFE14E2-CD (English) CGFF14E2-CD (French) CGFG14E2-CD (German) CGFS14E2-CD (Spanish) CGFI14E2-CD (Italian) N/A (RUSSIA) DRAFT (ARGENTINA, SOUTH AFRICA)	LUBRICANT(S) (M261-00-041-84600-01)	Attached sheet 10
		DRIVESHAFT ASSEMBLY REMOVAL AND INSTALLATION (M261-00-352-55501-01)	Attached sheet 9
		LUBRICANT(S) (M271-00-041-22300-01)	Attached sheet 11
		DRIVESHAFT ASSEMBLY REMOVAL AND INSTALLATION (M271-00-330-82400-01)	Attached sheet 12
2014.5 OUTLANDER/ OUTLANDER PHEV Workshop Manual	CGFE14E3-CD (English) CGFF14E3-CD (French) CGFG14E3-CD (German) CGFS14E3-CD (Spanish) CGFI14E3-CD (Italian) DRAFT (ARGENTINA, SOUTH AFRICA)	LUBRICANT(S) (M261-00-041-84601-01)	Attached sheet 13
		DRIVESHAFT ASSEMBLY REMOVAL AND INSTALLATION (M261-00-352-55501-01)	Attached sheet 9
		LUBRICANT(S) (M271-00-041-22302-01)	Attached sheet 11
		DRIVESHAFT ASSEMBLY REMOVAL AND INSTALLATION (M271-00-330-82400-01)	Attached sheet 12
2016 OUTLANDER/ OUTLANDER PHEV Workshop Manual	CGFE16E1-CD (English) CGFF16E1-CD (French) CGFG16E1-CD (German) CGFS16E1-CD (Spanish) CGFI16E1-CD (Italian) N/A (RUSSIA) DRAFT (ARGENTINA, SOUTH AFRICA)	LUBRICANT(S) (M261-00-042-12800-01)	Attached sheet 14
		DRIVESHAFT ASSEMBLY REMOVAL AND INSTALLATION (M261-00-352-87800-01)	Attached sheet 9
		LUBRICANT(S) (M271-00-041-22303-01)	Attached sheet 15
		DRIVESHAFT ASSEMBLY REMOVAL AND INSTALLATION (M271-00-330-82400-01)	Attached sheet 12

AUSTRALIA/NEW ZEALAND/CHINA

Applicable manual	Pub. No.	Applicable title (Info-ID)	Contents
2013 OUTLANDER Workshop Manual	AU900304 (MMAL) DRAFT (NZ, CHINA)	LUBRICANT(S) (M261-00-041-88000-01)	Attached sheet 8
		DRIVESHAFT ASSEMBLY REMOVAL AND INSTALLATION (M261-00-352-50000-01)	Attached sheet 9
2016 OUTLANDER PHEV Workshop Manual	AU900504 (MMAL), DRAFT (NZ)	LUBRICANT(S) (M271-00-041-37500-01)	Attached sheet 16
		DRIVESHAFT ASSEMBLY REMOVAL AND INSTALLATION (M271-00-330-92100-01)	Attached sheet 12

GENERAL EXPORT/GCC/BRAZIL

Applicable manual	Pub. No.	Applicable title (Info-ID)	Contents
2014 OUTLANDER Workshop Manual	PWRE1303R (English) PWRS1304R (Spanish) BRAZIL:DRAFT	LUBRICANT(S) (M261-00-041-94300-01)	Attached sheet 17
		DRIVESHAFT ASSEMBLY REMOVAL AND INSTALLATION (M261-00-352-59900-01)	Attached sheet 9

MMNA/MEXICO

Applicable manual	Pub. No.	Applicable title (Info-ID)	Contents
2014 OUTLANDER Workshop Manual	MSCD-007B-2014 (MMNA)	LUBRICANT(S) (M261-00-041-84600-01)	Attached sheet 18
		DRIVESHAFT ASSEMBLY REMOVAL AND INSTALLATION (M261-00-352-44701-01)	Attached sheet 19
2015 OUTLANDER Workshop Manual	MSCD-007B-2015 (MMNA)	LUBRICANT(S) (M261-00-042-00900-01)	Attached sheet 20
		DRIVESHAFT ASSEMBLY REMOVAL AND INSTALLATION (M261-00-352-44701-01)	Attached sheet 19
2016 OUTLANDER Workshop Manual	- (MMNA) DRAFT (MEXICO)	LUBRICANT(S) (M261-00-042-10600-01)	Attached sheet 21
		DRIVESHAFT ASSEMBLY REMOVAL AND INSTALLATION (M261-00-352-44702-01)	Attached sheet 19

Attached sheet 8

LUBRICANTS

M1261000401846

Item	Specified lubricant				Quantity
Inside of knuckle bore	Shell Sunlight Grease BD2 or equivalent				As required (1.0 – 1.5 g)
PTJ	Repair kit grease	2WD	4J1 (M/T)	LH	185 ± 10 g
				RH	210 ± 10 g
			4N1 (M/T)	LH/RH	255 ± 10 g
			4B1, 4J1 (CVT)	LH/RH	210 ± 10 g
		4WD	4N1 (M/T)	LH/RH	255 ± 10 g
			4B1, 4J1 (CVT)	LH	210 ± 10 g
				RH	200 ± 10 g
			4N1 (A/T)	LH	245 ± 10 g
				RH	255 ± 10 g
EBJ	Repair kit grease	2WD	4B1, 4J1	LH/RH	120 ± 10 g
			4N1	LH/RH	140 ± 10 g
		4WD	4B1, 4J1	LH/RH	120 ± 10 g
			4N1	LH/RH	140 ± 10 g

<Added>

Connection between the drive shaft assembly and the wheel bearing	Shell Alvania Grease HDX	As required (About 1.0 - 1.5 g)

>>C<< DRIVESHAFT NUT INSTALLATION

⚠ CAUTION

Do not apply the vehicle weight on the front wheel hub assembly before fully tightening the driveshaft nut. Otherwise, the wheel bearing may be broken.

1. Check the hub seated surface for damage or corrosion. Whenever solvent is used for removing the corrosion, the surface should be degreased.
2. Check that the new driveshaft nut can be turned smoothly by hand. Then tighten it until it is seated.

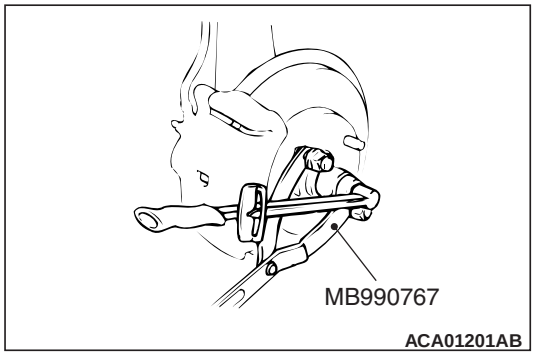

3. Using special tool front hub and flange yoke holder (MB990767), tighten the driveshaft nut.

   Tightening torque: 270 ± 27 N·m

4. After tightening to the specified torque, check that the nut is seated securely.

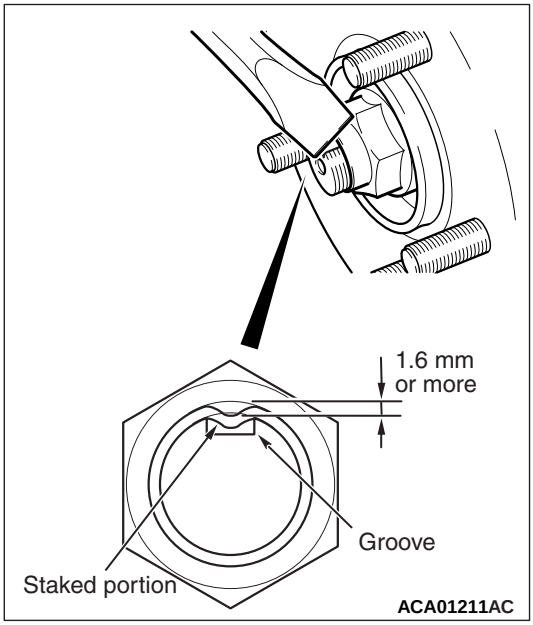

5. Use the chisel and a hammer to stake the nut until the centre in the staked portion reaches the shown dimension.
6. Finally, check that the nut is not cracked at its staked portion.

<Added>

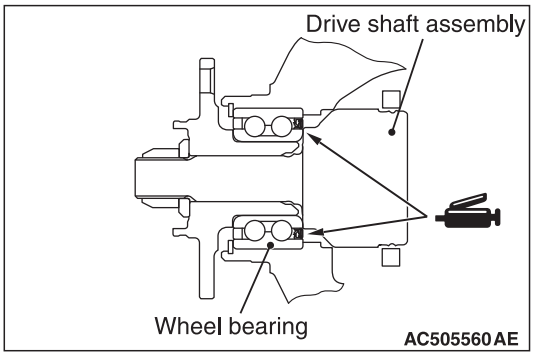

1-1. Apply the grease as shown and then insert the drive shaft assembly into the front hub.

Specified grease: Shell Alvania Grease HDX
Amount to use: As required (About 1.0 – 1.5 g)

Attached sheet 10

LUBRICANTS

M1261000401846

Item	Specified lubricant				Quantity
Inside of knuckle bore	Shell Sunlight Grease BD2 or equivalent				As required (1.0 – 1.5 g)
Inboard joint	Repair kit grease	2WD	4J1 (M/T)	LH	185 ± 10 g
				RH	210 ± 10 g
			4N1 (M/T)	LH/RH	255 ± 10 g
			4B1, 4J1 (CVT)	LH/RH	210 ± 10 g
		4WD	4N1 (M/T)	LH/RH	255 ± 10 g
			4B1 (Except for PHEV), 4J1 (CVT)	LH	210 ± 10 g
				RH	200 ± 10 g
			4B1 (PHEV)	LH/RH	115 ± 10 g
			4N1 (A/T)	LH	245 ± 10 g
				RH	255 ± 10 g
Outboard joint	Repair kit grease	2WD	4B1, 4J1	LH/RH	120 ± 10 g
			4N1	LH/RH	140 ± 10 g
		4WD	4B1 (Except for PHEV), 4J1	LH/RH	120 ± 10 g
			4B1 (PHEV)	LH/RH	95 ± 10 g
			4N1	LH/RH	140 ± 10 g

<Added>

Connection between the drive shaft assembly and the wheel bearing	Shell Alvania Grease HDX	As required (About 1.0 - 1.5 g)

Attached sheet 11

LUBRICANTS

M1271000401223

Item	Specified lubricant		Quantity
Gear oil	MITSUBISHI MOTORS GENUINE super hypoid gear oil API classification GL-5, SAE 80		Approx. 0.4 L
Inboard joint	Repair kit grease	Except for PHEV	75 ± 10 g
		PHEV	55 ± 10 g

<Added>

Connection between the drive shaft assembly and the wheel bearing <PHEV>	Shell Alvania Grease HDX	As required (About 1.0 - 1.5 g)

>>B<< DRIVESHAFT NUT INSTALLATION

⚠ CAUTION

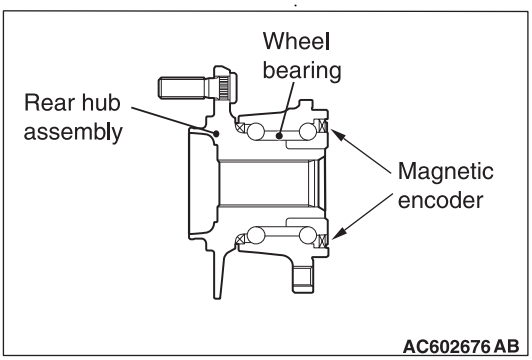

The wheel speed detection magnetic encoder collects metallic particles easily, because it is magnetised. Make sure that the magnetic encoder should not collect metallic particles. Check that there is not any trouble prior to reassembling it.

- **When installing the drive shaft, make sure that it does not contact with the wheel speed detection magnetic encoder (integrated with the inner oil seal) to avoid damage.**
- **Do not apply the vehicle weight on the rear wheel hub assembly before fully tightening the driveshaft nuts. Otherwise, the wheel bearing will be broken.**

1. Check the hub seated surface for damage or corrosion. Whenever solvent is used for removing the corrosion, the surface should be degreased.
2. Check that the new driveshaft nut can be turned smoothly by hand. Then tighten it until it is seated.

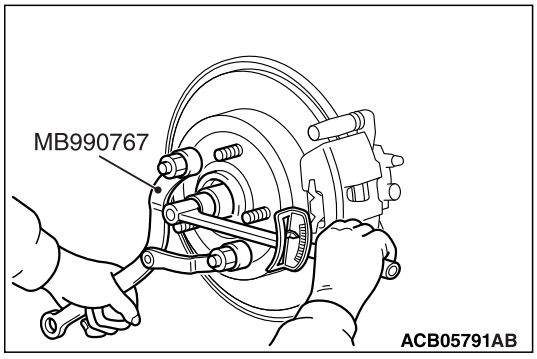

3. Using special tool front hub and flange yoke holder (MB990767), tighten the driveshaft nut.

Tightening torque: 270 ± 27 N·m

4. After tightening to the specified torque, check that the nut is seated securely.

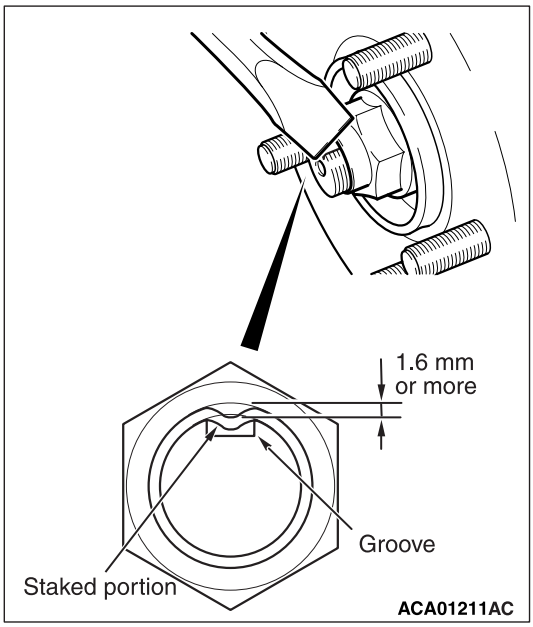

5. Use the chisel and a hammer to stake the nut until the centre in the staked portion reaches the shown dimension.
6. Finally, check that the nut is not cracked at its staked portion.

<Added>

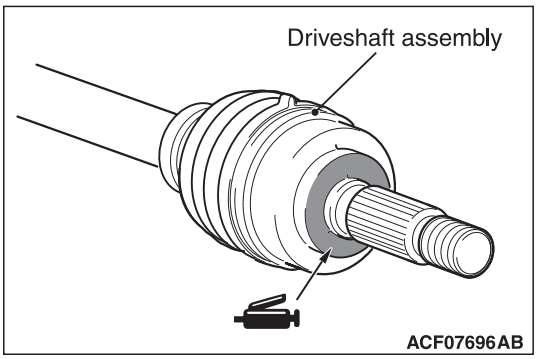

1-1. Apply the grease as shown and then insert the drive shaft assembly into the rear hub assembly.<PHEV>.

Specified grease: Shell Alvania Grease HDX

Amount to use: As required (About 1.0 – 1.5g)

Attached sheet 13

LUBRICANTS

M1261000401846

Item	Specified lubricant				Quantity
Inside of knuckle bore	DOW CORNING TORAY Molykote EP				As required (About 2.0 g)
Inboard joint	Repair kit grease	2WD	4J1 (M/T)	LH	185 ± 10 g
				RH	210 ± 10 g
			4N1 (M/T)	LH/RH	255 ± 10 g
			4B1, 4J1 (CVT)	LH/RH	210 ± 10 g
		4WD	4N1 (M/T)	LH/RH	255 ± 10 g
			4B1 (Except for PHEV), 4J1 (CVT)	LH	210 ± 10 g
				RH	200 ± 10 g
			4B1 (PHEV)	LH/RH	115 ± 10 g
			4N1 (A/T)	LH	245 ± 10 g
				RH	255 ± 10 g
Outboard joint	Repair kit grease	2WD	4B1, 4J1	LH/RH	120 ± 10 g
			4N1	LH/RH	140 ± 10 g
		4WD	4B1 (Except for PHEV), 4J1	LH/RH	120 ± 10 g
			4B1 (PHEV)	LH/RH	95 ± 10 g
			4N1	LH/RH	140 ± 10 g

<Added>

Connection between the drive shaft assembly and the wheel bearing	Shell Alvania Grease HDX	As required (About 1.0 - 1.5 g)

LUBRICANTS

M1261000402128

Item	Specified lubricant				Quantity
Inside of knuckle bore	DOW CORNING TORAY Molykote EP				As required (About 2.0 g)
Inboard joint	Repair kit grease	2WD	4J1 (M/T)	LH	185 ± 10 g
				RH	210 ± 10 g
			4N1 (M/T)	LH/RH	255 ± 10 g
			4B1, 4J1 (CVT)	LH/RH	210 ± 10 g
		4WD	4N1 (M/T)	LH/RH	255 ± 10 g
			4B1 (Except PHEV), 4J1 (CVT)	LH	210 ± 10 g
				RH	200 ± 10 g
			4B1 (PHEV)	LH/RH	115 ± 10 g
			4N1 (A/T)	LH	245 ± 10 g
				RH <Vehicles without S-AWC>	255 ± 10 g
				RH <Vehicles with S-AWC>	260 ± 10 g
Outboard joint	Repair kit grease	2WD	4B1, 4J1	LH/RH	120 ± 10 g
			4N1	LH/RH	140 ± 10 g
		4WD	4B1 (Except PHEV), 4J1	LH/RH	120 ± 10 g
			4B1 (PHEV)	LH/RH	95 ± 10 g
			4N1	LH	140 ± 10 g
				RH <Vehicles without S-AWC>	140 ± 10 g
				RH <Vehicles with S-AWC>	135 ± 10 g

<Added>

Connection between the drive shaft assembly and the wheel bearing	Shell Alvania Grease HDX	As required (About 1.0 - 1.5 g)

Attached sheet 15

LUBRICANTS

M1271000401223

Item	Specified lubricant		Quantity
Gear oil <Except PHEV>	MITSUBISHI MOTORS GENUINE super hypoid gear oil API classification GL-5, SAE 80		Approx. 0.4 L
Inboard joint	Repair kit grease	Except for PHEV	75 ± 10 g
		PHEV	55 ± 10 g

<Added>

Connection between the drive shaft assembly and the wheel bearing <PHEV>	Shell Alvania Grease HDX	As required (About 1.0 - 1.5 g)

Attached sheet 16

LUBRICANTS

M1271000401375

Item	Specified lubricant	Quantity
Inboard joint	Repair kit grease	55 ± 10 g

<Added>

Connection between the drive shaft assembly and the wheel bearing <PHEV>	Shell Alvania Grease HDX	As required (About 1.0 - 1.5 g)

Attached sheet 17

LUBRICANTS

M1261000401943

Item	Specified lubricant				Quantity
Inside of knuckle bore	Shell Sunlight Grease BD2 or equivalent				As required (1.0 – 1.5 g)
PTJ	Repair kit grease	2WD		LH	220 ± 10 g
				RH	210 ± 10 g
		4WD	2400	LH	220 ± 10 g
				RH	200 ± 10 g
			3000	LH	245 ± 10 g
				RH	255 ± 10 g
EBJ	Repair kit grease	2WD		LH	120 ± 10 g
		4WD	2400	LH/RH	120 ± 10 g
			3000	LH/RH	140 ± 10 g

<Added>

Connection between the drive shaft assembly and the wheel bearing	Shell Alvania Grease HDX	As required (About 1.0 - 1.5 g)

Attached sheet 18

LUBRICANTS

M1261000401846

Item	Specified lubricant				Quantity
Inside of knuckle bore	DOW CORNING TORAY Molykote EP				As required [2.0 g (0.07 oz)]
PTJ	Repair kit grease	FWD	2.4 L Engine	LH	220 ± 10 g (7.8 ± 0.4 oz)
				RH	235 ± 10 g (8.3 ± 0.4 oz)
		AWD		LH	220 ± 10 g (7.8 ± 0.4 oz)
			2.4 L Engine <Vehicles without S-AWC>	RH	200 ± 10 g (7.1 ± 0.4 oz)
			2.4 L Engine <Vehicles with S-AWC>		250 ± 10 g (8.8 ± 0.4 oz)
			3.0 L Engine	LH	245 ± 10 g (8.6 ± 0.4 oz)
			3.0 L Engine <Vehicles without S-AWC>	RH	255 ± 10 g (9.0 ± 0.4 oz)
			3.0 L Engine <Vehicles with S-AWC>		250 ± 10 g (8.8 ± 0.4 oz)
EBJ	Repair kit grease		2.4 L Engine	LH	120 ± 10 g (4.2 ± 0.4 oz)
			2.4 L Engine <Vehicles without S-AWC>	RH	
			2.4 L Engine <Vehicles with S-AWC>		135 ± 10 g (4.8 ± 0.4 oz)
			3.0 L Engine	LH	140 ± 10 g (4.9 ± 0.4 oz)
			3.0 L Engine <Vehicles without S-AWC>	RH	
			3.0 L Engine <Vehicles with S-AWC>		135 ± 10 g (4.8 ± 0.4 oz)

<Added>

Connection between the drive shaft assembly and the wheel bearing	Shell Alvania Grease HDX	As required [About 1.0 - 1.5 (0.04 - 0.05 oz)]

>>C<< DRIVESHAFT NUT INSTALLATION

⚠ CAUTION

Do not apply the vehicle weight on the front wheel hub assembly before fully tightening the driveshaft nut. Otherwise, the wheel bearing may be broken.

1. Check the hub seated surface for damage or corrosion. Whenever solvent is used for removing the corrosion, the surface should be degreased.
2. Check that the new driveshaft nut can be turned smoothly by hand. Then tighten it until it is seated.
3. Using special tool front hub and flange yoke holder (MB990767), tighten the driveshaft nut.

   Tightening torque: 270 ± 27 N·m (199 ± 19 ft-lb)
4. After tightening to the specified torque, check that the nut is seated securely.

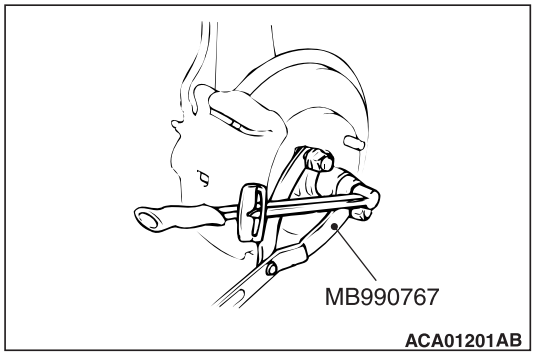

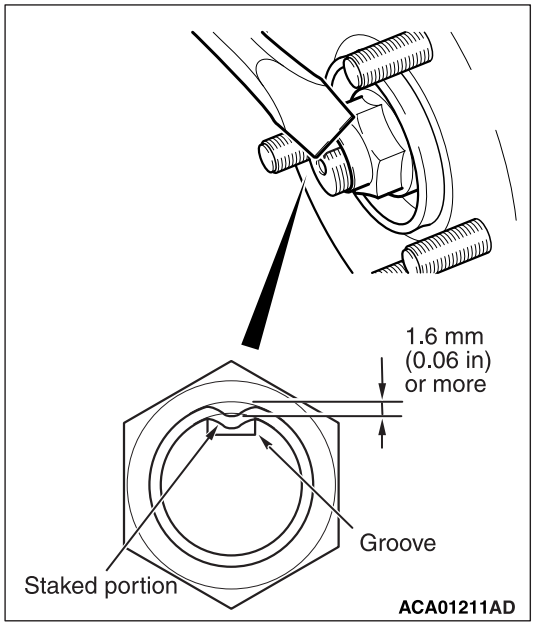

5. Use the chisel and a hammer to stake the nut until the center in the staked portion reaches the shown dimension.
6. Finally, check that the nut is not cracked at its staked portion.

<Added>

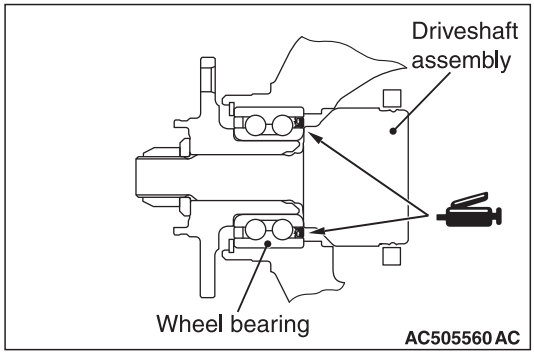

1-1. Apply the grease as shown and then insert the drive shaft assembly into the front hub.

Specified grease: Shell Alvania Grease HDX
Amount to use: As required [About 1.0 – 1.5 g (0.04 – 0.05 oz)]

LUBRICANTS

M1261000402009

Item	Specified lubricant				Quantity
Inside of knuckle bore	DOW CORNING TORAY Molykote EP				As required [2.0 g (0.07 oz)]
PTJ	Repair kit grease	FWD	2.4 L Engine	LH	220 ± 10 g (7.8 ± 0.4 oz)
				RH	235 ± 10 g (8.3 ± 0.4 oz)
		AWD		LH	220 ± 10 g (7.8 ± 0.4 oz)
			2.4 L Engine <Vehicles without S-AWC>	RH	200 ± 10 g (7.1 ± 0.4 oz)
			3.0 L Engine	LH	245 ± 10 g (8.6 ± 0.4 oz)
			3.0 L Engine <Vehicles without S-AWC>	RH	255 ± 10 g (9.0 ± 0.4 oz)
EBJ	Repair kit grease		2.4 L Engine	LH	120 ± 10 g (4.2 ± 0.4 oz)
			2.4 L Engine <Vehicles without S-AWC>	RH	
			2.4 L Engine <Vehicles with S-AWC>		135 ± 10 g (4.8 ± 0.4 oz)
			3.0 L Engine	LH	140 ± 10 g (4.9 ± 0.4 oz)
			3.0 L Engine <Vehicles without S-AWC>	RH	
			3.0 L Engine <Vehicles with S-AWC>		135 ± 10 g (4.8 ± 0.4 oz)

<Added>

Connection between the drive shaft assembly and the wheel bearing	Shell Alvania Grease HDX	As required [About 1.0 - 1.5 (0.04 - 0.05 oz)]

Attached sheet 21

LUBRICANTS

M1261000402106

Item	Specified lubricant				Quantity
Inside of knuckle bore	DOW CORNING TORAY Molykote EP				As required [2.0 g (0.07 oz)]
PTJ	Repair kit grease	FWD	2.4L Engine	LH	220 ± 10 g (7.8 ± 0.4 oz)
				RH	235 ± 10 g (8.3 ± 0.4 oz)
		AWD	2.4L Engine	LH	220 ± 10 g (7.8 ± 0.4 oz)
				RH <Vehicles without S-AWC>	200 ± 10 g (7.1 ± 0.4 oz)
				RH <Vehicles with S-AWC>	260 ± 10 g (9.2 ± 0.4 oz)
			3.0L Engine	LH	245 ± 10 g (8.6 ± 0.4 oz)
				RH <Vehicles without S-AWC>	255 ± 10 g (9.0 ± 0.4 oz)
				RH <Vehicles with S-AWC>	260 ± 10 g (9.2 ± 0.4 oz)
EBJ	Repair kit grease		2.4L Engine	LH	120 ± 10 g (4.2 ± 0.4 oz)
				RH <Vehicles without S-AWC>	120 ± 10 g (4.2 ± 0.4 oz)
				RH <Vehicles with S-AWC>	135 ± 10 g (4.8 ± 0.4 oz)
			3.0L Engine	LH	140 ± 10 g (4.9 ± 0.4 oz)
				RH <Vehicles without S-AWC>	140 ± 10 g (4.9 ± 0.4 oz)
				RH <Vehicles with S-AWC>	135 ± 10 g (4.8 ± 0.4 oz)

NOTE:

- *PTJ: Pillow Tripod Joint*
- *EBJ: High Efficiency Compact Birfield Joint*

<Added>

Connection between the drive shaft assembly and the wheel bearing	Shell Alvania Grease HDX	As required [About 1.0 - 1.5 (0.04 - 0.05 oz)]