SERVICE BULLETIN

MITSUBISHI MOTORS

GLOBAL AFTER SALES OFFICE, MITSUBISHI MOTORS CORPORATION

PURPOSE : CHANGE	ISSUE NO. : MSB-16EXML33-001	DATE : 2016-01-15
SUBJECT : Changes of the installation service points of the stabilizer bar due to the abolition of the identification mark		<DESTINATION/MODEL> (As per attached sheet 1) <M/Y> 13-17
GROUP : Gr:33(Front suspention)		MIRAGE/SPACE STAR (A03A) ATTRAGE(A10)

1. Description :

Please refer to the attached document for the information about the change of mention in the applicable service manual.

2. Affected service manuals :

Please refer to the attached document (Attached sheet 1)

3. About the details :

Please refer to the attached document (Attached sheet 3-4)

4. Timing of implementation :

From the related vehicle to be produced after the beginning of Sep 2015.

＜For overseas market＞

＜EU/RUSSIA＞

Applicable manual	Pub. No.	Applicable title (INFO ID)	Content
2013 MIRAGE/SPACE STAR Workshop Manual	CA0E13E1-CD (ENG) CA0F13E1-CD (FRE) CA0G13E1-CD (GER) CA0S13E1-CD (SPA) CA0I13E1-CD (ITA) RUSSIA:N/A	STABILIZER BAR REMOVAL AND INSTALLATION (M332-00-401-23400-01)	Attached sheet 3
2014 MIRAGE/SPACE STAR Workshop Manual	CA0E14E1-CD (ENG) CA0F14E1-CD (FRE) CA0G14E1-CD (GER) CA0S14E1-CD (SPA) CA0I14E1-CD (ITA) RUSSIA:N/A	STABILIZER BAR REMOVAL AND INSTALLATION (M332-00-401-23400-01)	Attached sheet 3
2015 MIRAGE/SPACE STAR Workshop Manual	CA0E15E1-CD (ENG) CA0F15E1-CD (FRE) CA0G15E1-CD (GER) CA0S15E1-CD (SPA) CA0I15E1-CD (ITA) RUSSIA:N/A	STABILIZER BAR REMOVAL AND INSTALLATION (M332-00-401-23401-01)	Attached sheet 3
2015.5 MIRAGE/SPACE STAR Workshop Manual	CA0E15E2-CD (ENG) CA0F15E2-CD (FRE) CA0G15E2-CD (GER) CA0S15E2-CD (SPA) CA0I15E2-CD (ITA) RUSIA:N/A	STABILIZER BAR REMOVAL AND INSTALLATION (M332-00-401-23402-01)	Attached sheet 3
2014 ATTRAGE Workshop Manual	CA1E14E1-CD (ENG) CA1F14E1-CD (FRE) CA1G14E1-CD (GER) CA1S14E1-CD (SPA) CA1I14E1-CD (ITA) RUSSIS:N/A	STABILIZER BAR REMOVAL AND INSTALLATION (M332-00-401-28900-01)	Attached sheet 3
2015 ATTRAGE Workshop Manual	CA1E15E1-CD (ENG) CA1F15E1-CD (FRE) CA1G15E1-CD (GER) CA1S15E1-CD (SPA) CA1I15E1-CD (ITA) RUSSIA:N/A	STABILIZER BAR REMOVAL AND INSTALLATION (M332-00-401-28900-01)	Attached sheet 3
2015.5 ATTRAGE Workshop Manual	CA1E15E2-CD (ENG) CA1F15E2-CD (FRE) CA1G15E2-CD (GER) RUSSIA:N/A	STABILIZER BAR REMOVAL AND INSTALLATION (M332-00-401-28900-01)	Attached sheet 3
2016 ATTRAGE Workshop Manual	CA1E16E1-CD (ENG) CA1F16E1-CD (FRE) CA1G16E1-CD (GER) RUSSIA:N/A	STABILIZER BAR REMOVAL AND INSTALLATION (M332-00-401-28900-01)	Attached sheet 3

＜THAILAND/General Export/GCC＞

Applicable manual	Pub. No.	Applicable title (INFO ID)	Content
2013 MIRAGE/SPACE STAR Workshop Manual	PWFE1201RP (PHILIPPINE)	STABILIZER BAR REMOVAL AND INSTALLATION (M332-00-401-25600-01)	Attached sheet 3
2014 MIRAGE/SPACE STAR Workshop Manual	PWFE1301R(ENG) PWFS1302R(SPA) DRAFT(THAILAND)	STABILIZER BAR REMOVAL AND INSTALLATION (M332-00-401-25600-01)	Attached sheet 3
2015 MIRAGE/SPACE STAR Workshop Manual	PWFE1405R(ENG) PWFS1406R(SPA) DRAFT(THAILAND)	STABILIZER BAR REMOVAL AND INSTALLATION (M332-00-401-34200-01)	Attached sheet 3
2016 MIRAGE/SPACE STAR Workshop Manual	DRAFT(THAILAND)	STABILIZER BAR REMOVAL AND INSTALLATION (M332-00-401-34200-01)	Attached sheet 3
2017 MIRAGE/SPACE STAR Workshop Manual	PWFE1601R(ENG)	STABILIZER BAR REMOVAL AND INSTALLATION (M332-00-401-34200-01)	Attached sheet 3
2014 ATTRAGE/MIRAGE G4 Workshop Manual	PWFE1305R(ENG) PWFS1306R(SPA) PWFE1305RA (PHILIPPINE) DRAFT(THAILAND)	STABILIZER BAR REMOVAL AND INSTALLATION (M332-00-401-25600-01)	Attached sheet 3
2015 ATTRAGE/MIRAGE G4 Workshop Manual	PWFE1401R(ENG) PWFS1402R(SPA) DRAFT(THAILAND)	STABILIZER BAR REMOVAL AND INSTALLATION (M332-00-401-25600-01)	Attached sheet 3

＜MMAL/NZ＞

Applicable manual	Pub. No.	Applicable title (INFO ID)	Content
2014 MIRAGE Workshop Manual	AU900305(MMAL) DRAFT(NZ)	STABILIZER BAR REMOVAL AND INSTALLATION (M332-00-401-23400-01)	Attached sheet 3
2015 MIRAGE Workshop Manual	AU900425(MMAL) DRAFT(NZ)	STABILIZER BAR REMOVAL AND INSTALLATION (M332-00-401-23400-01)	Attached sheet 3
2016 MIRAGE Workshop Manual	AU900539(MMAL) DRAFT(NZ)	STABILIZER BAR REMOVAL AND INSTALLATION (M332-00-401-23400-01)	Attached sheet 3
2015 ATTRAGE Workshop Manual	AU900435(MMAL) DRAFT(NZ)	STABILIZER BAR REMOVAL AND INSTALLATION (M332-00-401-23400-01)	Attached sheet 3
2016 ATTRAGE Workshop Manual	AU900538(MMAL) DRAFT(NZ)	STABILIZER BAR REMOVAL AND INSTALLATION (M332-00-401-23400-01)	Attached sheet 3

＜MMNA/MEXICO＞

Applicable manual	Pub. No.	Applicable title (INFO ID)	Content
2014 MIRAGE SERVICE MANUAL	MSCD-016B-2014 MEXICO:DRAFT	STABILIZER BAR REMOVAL AND INSTALLATION (M332-00-401-27801-01)	Attached sheet 4
2015 MIRAGE SERVICE MANUAL	MSCD-016B-2015 MEXICO:DRAFT	STABILIZER BAR REMOVAL AND INSTALLATION (M332-00-401-27801-01)	Attached sheet 4

REMOVAL SERVICE POINT

<<A>> LOWER ARM AND KNUCKLE/TIE ROD END AND KNUCKLE DISCONNECTION

⚠ CAUTION

- **Do not remove the nut from ball joint. Loosen it and use special tool steering linkage puller (MB991113) to avoid possible damage to ball joint threads.**
- **Hang special tool steering linkage puller (MB991113) with a cord to prevent it from falling.**

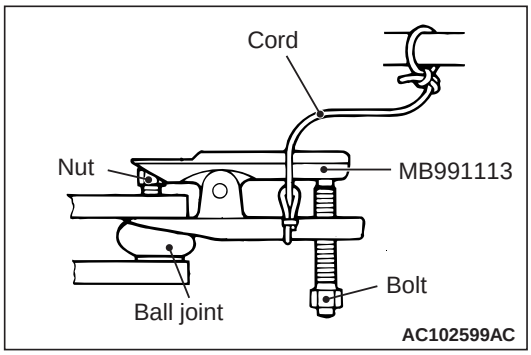

Replace the self-locking nut for lower arm ball joint with a regular nut, and then install special tool steering linkage puller (MB991113) as shown in the figure.

<<B>> STABILIZER BAR REMOVAL

Carry out the following operations to ensure working space in order to remove the stabilizer bar.

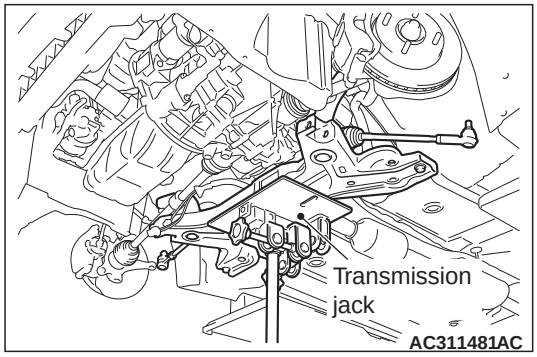

1. Use a transmission jack to hold the crossmember, and then remove the crossmember mounting nuts and bolts.
2. Lower the crossmember until the stabilizer bar can be removed.

<Added>

<Without identification mark>
Secure the stabilizer bar so that the right and left stabilizer links are tilted evenly. Make sure that the stabilizer bar does not interfere with adjacent components.

INSTALLATION SERVICE POINTS

>>A<< JOINT CUP (A)/STABILIZER LINK RUBBER/JOINT CUP (B)/STABILIZER LINK COLLAR INSTALLATION INSTALLATION

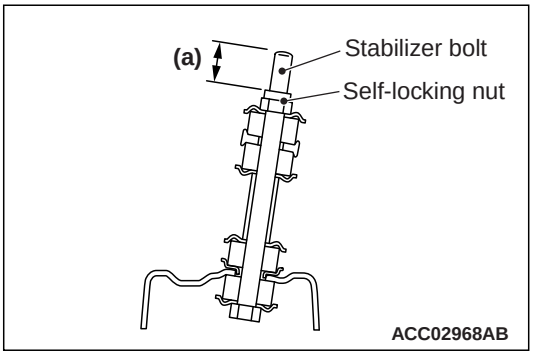

Tighten the self-locking nut until the stabilizer rubber thread part protruding length meets the standard value.

Standard value (a): 20 ± 1 mm

<With identification mark> <Added>

>>B<<BUSHING/FIXTURE INSTALLATION

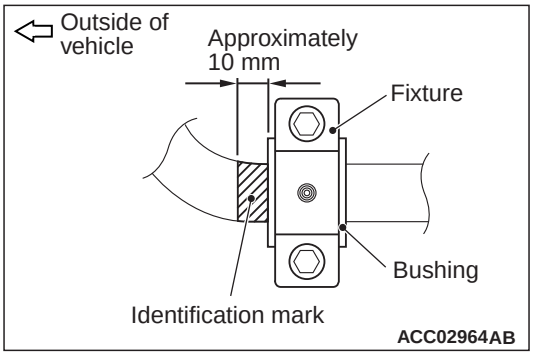

Align the stabilizer bar identification mark with the right end of the bushing (LH).

>>C<< STEERING COLUMN BOLT (INTERMEDIATE SHAFT ASSEMBLY AND STEERING GEAR & LINKAGE CONNECTION) INSTALLATION

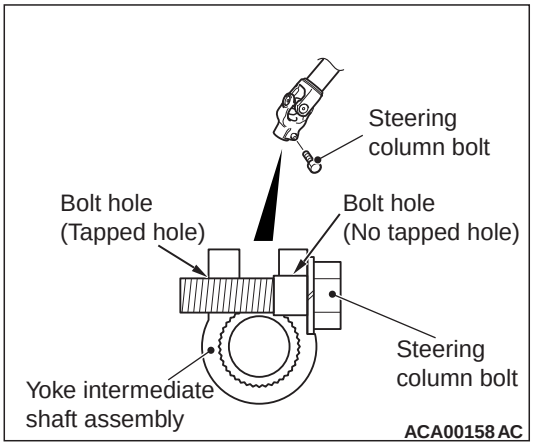

<With identification mark>

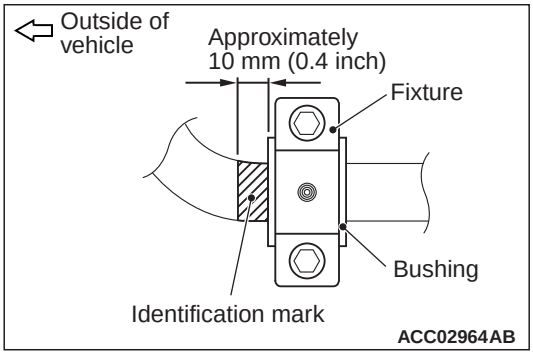

<Added>

>>B<<BUSHING/FIXTURE INSTALLATION

Align the stabilizer bar identification mark with the right end of the bushing (LH).

<Added>

<Without identification mark>

Secure the stabilizer bar so that the right and left stabilizer links are tilted evenly. Make sure that the stabilizer bar does not interfere with adjacent components.

>>C<< STEERING COLUMN BOLT (INTERMEDIATE SHAFT ASSEMBLY AND STEERING GEAR & LINKAGE CONNECTION) INSTALLATION

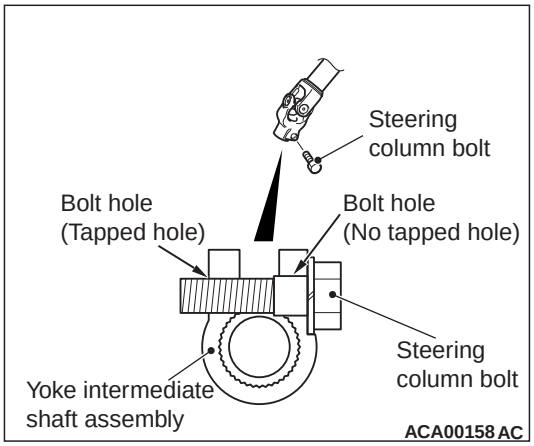

Insert the steering column bolt into the no-tapped bolt hole, and tighten it to the specified torque.

Tightening torque: 35 ± 7 N·m (26 ± 5 ft-lb)

>>D<< STEERING SHAFT JOINT DUST COVER INSTALLATION

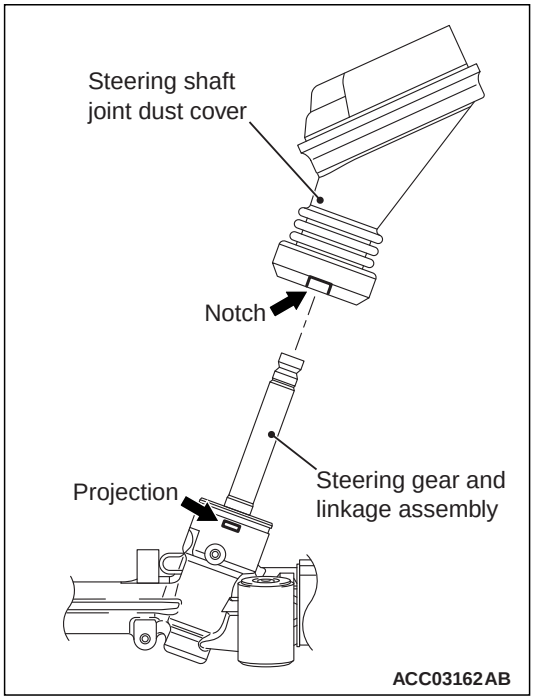

Install the steering shaft joint dust cover so that the cover notch is aligned with the projection of the steering gear and linkage assembly.
Shall fit the steering shaft joint dust cover in steering gear and linkage assembly cater-corner, then fit in all round until the lip shall be fitted into groove of steering gear and linkage assembly.
Shall pull the steering shaft joint dust cover to confirm that the steering shaft joint dust cover is fitted into steering gear and linkage assembly securely.