SERVICE BULLETIN

MITSUBISHI MOTORS

GLOBAL AFTER SALES OFFICE, MITSUBISHI MOTORS CORPORATION

PURPOSE : Correction	ISSUE NO. : MSB-18E11-501	DATE : 2018-12-18
SUBJECT : Correction of the maintenance procedure of TIMING CHAIN and CAMSHAFT when overhaul of 4N1 Engine		<DESTINATION/MODEL> (EU) <M/Y> 11-18
GROUP : Gr:11(ENGINE OVERHAUL)		OUTLANDER(CW0W)/ OUTLANDER(GF0W)/ ASX(GA0W)

1. Description :

Please refer to the attached documents for correcting error described in the applicable service manual.

2. Affected service manuals :

Please refer to the attached document (Attached sheet 1)

※The word "DRAFT" is described for the workshop manual whose local publication number of each distributor is not known in MMC.

3. About the details :

Please refer to the attached documents (Attached sheet 2-12)

Attached sheet 1 (1/3)

EU
<OUTLANDER>

Applicable manual	Pub. No.	Applicable title (INFO ID)	Content
2011 OUTLANDER Workshop Manual	CGXE11E1-CD (English) CGXF11E1-CD (French) CGXG11E1-CD (German) CGXS11E1-CD (Spanish)	TIMING CHAIN REMOVAL AND INSTALLATION (M113-02-661-16700-01)	Attached sheet 2
		TIMING CHAIN INSPECTION (M113-02-671-02300-01)	
		CAMSHAFT REMOVAL AND INSTALLATION (M113-02-690-82001-01)	Attached sheet 3
		CAMSHAFT INSPECTION (M113-02-700-79000-01)	
2012 OUTLANDER Workshop Manual	CGXE12E1-CD (English) CGXF12E1-CD (French) CGXG12E1-CD (German) CGXS12E1-CD (Spanish)	TIMING CHAIN REMOVAL AND INSTALLATION (M113-02-661-16700-01)	Attached sheet 2
		TIMING CHAIN INSPECTION (M113-02-671-02300-01)	
		CAMSHAFT REMOVAL AND INSTALLATION (M113-02-690-82001-01)	Attached sheet 3
		CAMSHAFT INSPECTION (M113-02-700-79000-01)	
2013 OUTLANDER Workshop Manual	CGFE13E1-CD (English) CGFF13E1-CD (French) CGFG13E1-CD (German) CGFS13E1-CD (Spanish) CGFI13E1-CD (Italian)	TIMING CHAIN REMOVAL AND INSTALLATION (M113-02-661-27500-01)	Attached sheet 4
		TIMING CHAIN INSPECTION (M113-02-671-22700-01)	
		CAMSHAFT REMOVAL AND INSTALLATION (M113-02-690-96100-01)	Attached sheet 5
		CAMSHAFT INSPECTION (M113-02-700-97200-01)	
2014 OUTLANDER Workshop Manual	CGFE14E2-CD (English) CGFF14E2-CD (French) CGFG14E2-CD (German) CGFS14E2-CD (Spanish) CGFI14E2-CD (Italian)	TIMING CHAIN REMOVAL AND INSTALLATION (M113-02-661-27501-01)	Attached sheet 4
		TIMING CHAIN INSPECTION (M113-02-671-22700-01)	
		CAMSHAFT REMOVAL AND INSTALLATION (M113-02-690-96100-01)	Attached sheet 5
		CAMSHAFT INSPECTION (M113-02-700-97200-01)	
2016 OUTLANDER Workshop Manual	CGFE16E1-CD (English) CGFF16E1-CD (French) CGFG16E1-CD (German) CGFS16E1-CD (Spanish) CGFI16E1-CD (Italian)	TIMING CHAIN REMOVAL AND INSTALLATION (M113-02-661-27501-01)	Attached sheet 4
		TIMING CHAIN INSPECTION (M113-02-671-22700-01)	
		CAMSHAFT REMOVAL AND INSTALLATION (M113-02-690-96100-01)	Attached sheet 5
		CAMSHAFT INSPECTION (M113-02-700-97200-01)	
2017 OUTLANDER Workshop Manual	CGFE17E1-CD (English) CGFF17E1-CD (French) CGFG17E1-CD (German) CGFS17E1-CD (Spanish) CGFI17E1-CD (Italian)	TIMING CHAIN REMOVAL AND INSTALLATION (M113-02-661-27501-01)	Attached sheet 4
		TIMING CHAIN INSPECTION (M113-02-671-22700-01)	
		CAMSHAFT REMOVAL AND INSTALLATION (M113-02-690-96100-01)	Attached sheet 5
		CAMSHAFT INSPECTION (M113-02-700-97200-01)	

Attached sheet 1 (2/3)

EU
<ASX>

Applicable manual	Pub. No.	Applicable title (INFO ID)	Content
2011 ASX Workshop Manual	CGWE11E1-CD (English) CGWF11E1-CD (French) CGWG11E1-CD (German) CGWS11E1-CD (Spanish) CGWI11E1-CD (Italian)	TIMING CHAIN REMOVAL AND INSTALLATION (M113-02-661-05900-01)	Attached sheet 6
		TIMING CHAIN INSPECTION (M113-02-671-02300-01)	
		CAMSHAFT REMOVAL AND INSTALLATION (M113-02-690-82000-01)	Attached sheet 3
		CAMSHAFT INSPECTION (M113-02-700-79000-01)	
	CGWE11E2-CD (English) CGWF11E2-CD (French) CGWG11E2-CD (German) CGWS11E2-CD (Spanish) CGWI11E2-CD (Italian)	TIMING CHAIN REMOVAL AND INSTALLATION (M113-02-661-05900-01)	Attached sheet 6
		TIMING CHAIN INSPECTION (M113-02-671-02300-01)	
		CAMSHAFT REMOVAL AND INSTALLATION (M113-02-690-82000-01)	Attached sheet 3
		CAMSHAFT INSPECTION (M113-02-700-79000-01)	
2012 ASX Workshop Manual	CGWE12E1-CD (English) CGWF12E1-CD (French) CGWG12E1-CD (German) CGWS12E1-CD (Spanish) CGWI12E1-CD (Italian)	TIMING CHAIN REMOVAL AND INSTALLATION (M113-02-661-18900-01)	Attached sheet 7
		TIMING CHAIN INSPECTION (M113-02-671-13100-01)	
		CAMSHAFT REMOVAL AND INSTALLATION (M113-02-690-90500-01)	Attached sheet 8
		CAMSHAFT INSPECTION (M113-02-700-94900-01)	
2013 ASX Workshop Manual	CGAE13E1-CD (English) CGAF13E1-CD (French) CGAG13E1-CD (German) CGAS13E1-CD (Spanish) CGAI13E1-CD (Italian)	TIMING CHAIN REMOVAL AND INSTALLATION (M113-02-661-18901-01)	Attached sheet 7
		TIMING CHAIN INSPECTION (M113-02-671-13101-01)	
		CAMSHAFT REMOVAL AND INSTALLATION (M113-02-691-07200-01)	Attached sheet 8
		CAMSHAFT INSPECTION (M113-02-700-94900-01)	
	CGAE13E2-CD (English) CGAF13E2-CD (French) CGAG13E2-CD (German) CGAS13E2-CD (Spanish) CGAI13E2-CD (Italian)	TIMING CHAIN REMOVAL AND INSTALLATION (M113-02-661-33800-01)	Attached sheet 9
		TIMING CHAIN INSPECTION (M113-02-671-13101-01)	
		CAMSHAFT REMOVAL AND INSTALLATION (M113-02-691-12400-01)	Attached sheet 10
		CAMSHAFT INSPECTION (M113-02-700-94900-01)	
2014 ASX Workshop Manual	CGAE14E1-CD (English) CGAF14E1-CD (French) CGAG14E1-CD (German) CGAS14E1-CD (Spanish) CGAI14E1-CD (Italian)	TIMING CHAIN REMOVAL AND INSTALLATION (M113-02-661-33800-01)	Attached sheet 9
		TIMING CHAIN INSPECTION (M113-02-671-13101-01)	
		CAMSHAFT REMOVAL AND INSTALLATION (M113-02-691-12400-01)	Attached sheet 10
		CAMSHAFT INSPECTION (M113-02-700-94900-01)	

Attached sheet 1 (3/3)

EU
<ASX>

Applicable manual	Pub. No.	Applicable title (INFO ID)	Content
2015 ASX Workshop Manual	CGAE15E1-CD (English) CGAF15E1-CD (French) CGAG15E1-CD (German) CGAS15E1-CD (Spanish) CGAI15E1-CD (Italian)	TIMING CHAIN REMOVAL AND INSTALLATION (M113-02-661-33801-01)	Attached sheet 9
		TIMING CHAIN INSPECTION (M113-02-671-13101-01)	
		CAMSHAFT REMOVAL AND INSTALLATION (M113-02-691-12400-01)	Attached sheet 10
		CAMSHAFT INSPECTION (M113-02-700-94900-01)	
2015.5 ASX Workshop Manual	CGAE15E2-CD (English) CGAF15E2-CD (French) CGAG15E2-CD (German) CGAS15E2-CD (Spanish) CGAI15E2-CD (Italian)	TIMING CHAIN REMOVAL AND INSTALLATION (M113-02-661-39400-01)	Attached sheet 11
		TIMING CHAIN INSPECTION (M113-02-671-22700-01)	
		CAMSHAFT REMOVAL AND INSTALLATION (M113-02-691-17900-01)	Attached sheet 12
		CAMSHAFT INSPECTION (M113-02-701-05000-01)	
2017 ASX Workshop Manual	CGAE17E1-CD (English) CGAF17E1-CD (French) CGAG17E1-CD (German) CGAS17E1-CD (Spanish) CGAI17E1-CD (Italian)	TIMING CHAIN REMOVAL AND INSTALLATION (M113-02-661-39400-01)	Attached sheet 11
		TIMING CHAIN INSPECTION (M113-02-671-22700-01)	
		CAMSHAFT REMOVAL AND INSTALLATION (M113-02-691-17900-01)	Attached sheet 12
		CAMSHAFT INSPECTION (M113-02-701-05000-01)	
2018 ASX Workshop Manual	CGAE18E1-CD (English) CGAF18E1-CD (French) CGAG18E1-CD (German) CGAI18E1-CD (Spanish) CGAS18E1-CD (Italian)	TIMING CHAIN REMOVAL AND INSTALLATION (M113-02-661-39400-01)	Attached sheet 11
		TIMING CHAIN INSPECTION (M113-02-671-22700-01)	
		CAMSHAFT REMOVAL AND INSTALLATION (M113-02-691-17900-01)	Attached sheet 12
		CAMSHAFT INSPECTION (M113-02-701-05000-01)	

<Correct> Attached sheet 2 (6/13 to 13/13)

Attached sheet 2 (1/13)

<Incorrect>

TIMING CHAIN

REMOVAL AND INSTALLATION

M1113026601167

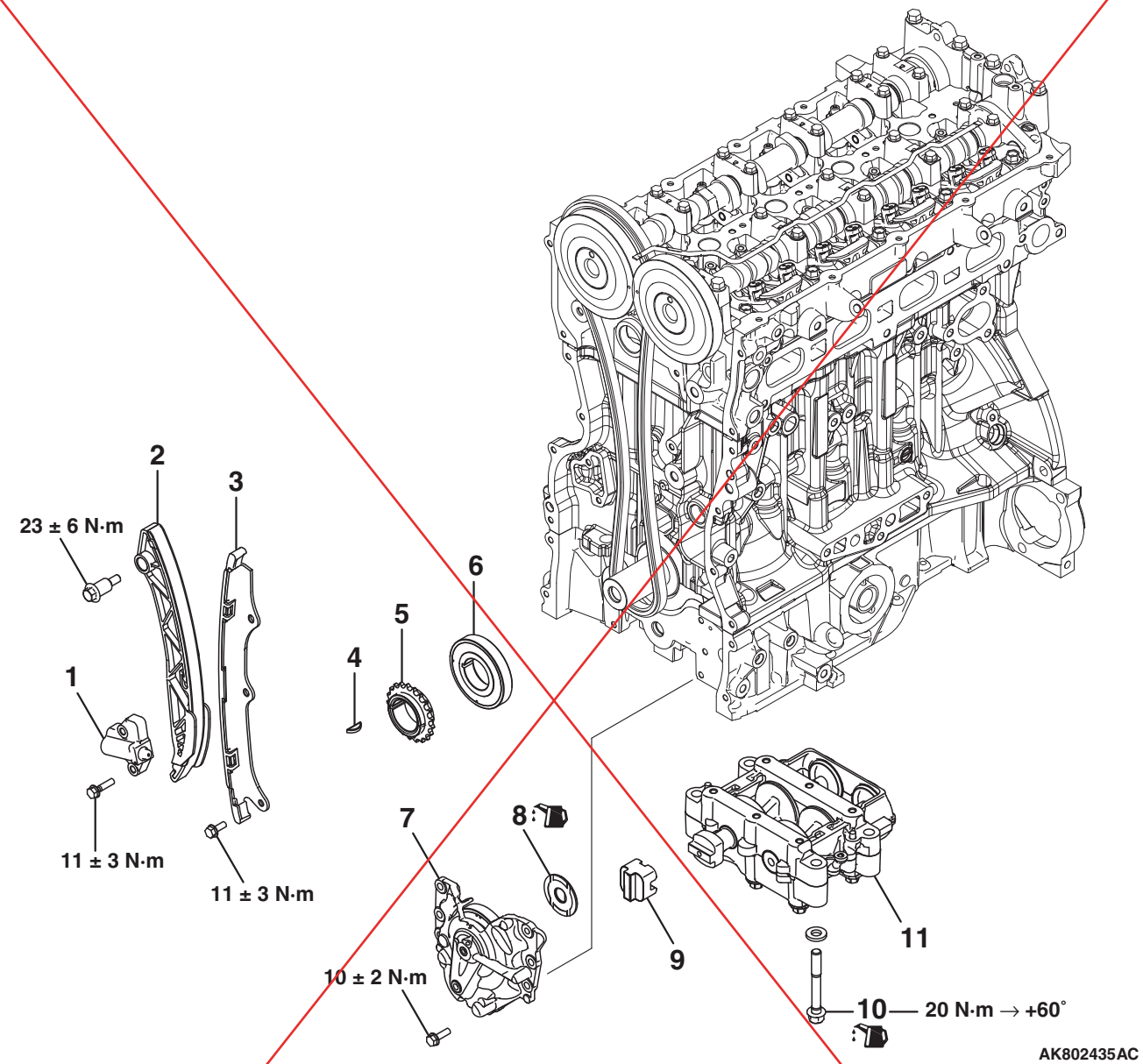

AK802435AC

Removal steps

<<A>>	>>D<<	1.	Timing chain tensioner
	>>D<<	2.	Tensioner lever
	>>D<<	3.	Timing chain guide
	>>D<<	4.	Crankshaft key
	>>C<<	5.	Crankshaft sprocket
	>>B<<	6.	Crankshaft gear
	>>B<<	7.	Balancer shaft drive housing and gear
	>>B<<	8.	Trust plate
	>>B<<	9.	Coupling
	>>A<<	10.	Balancer unit bolt
	>>A<<	11.	Balancer unit *1

*NOTE: *1:The balancer unit must not be overhauled for the assembly assurance.*

REMOVAL SERVICE POINT

<<A>> TIMING CHAIN TENSIONER REMOVAL

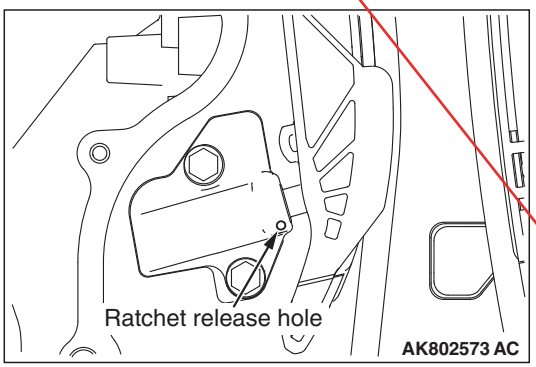

AK802573 AC

<Deleted>

1. Push the tensioner lever by hand and push in the plunger of the timing chain tensioner until it hits the bottom. Then, insert a hard wire (piano wire or the like) of ϕ1.0 or hexagonal bar wrench (1.0 mm) into the fixing hole of the plunger.

⚠ WARNING

If the timing chain tensioner set pin (fixed wire) suddenly comes off the timing chain tensioner, it is very dangerous because the plunger jumps out.

2. Remove the timing chain tensioner.

NOTE: At that time, the timing chain cannot be removed.

INSTALLATION SERVICE POINTS

>>A<< BALANCER UNIT / BALANCER UNIT BOLT INSTALLATION

1. Apply the appropriate and minimum amount of engine oil to the balance unit bolt thread portion and the lower portion of the flange.

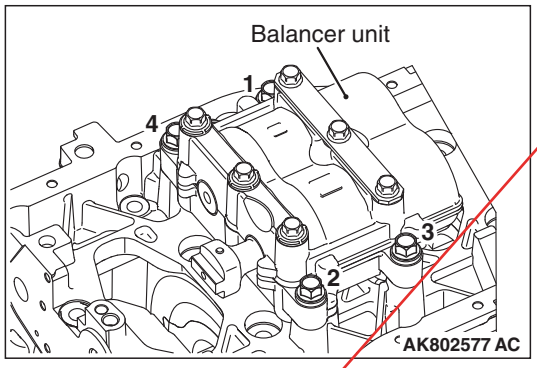

2. Install the balancer unit to the lower crankcase and tighten them to the tighten torque of 20 N·m in the order shown in the illustration.

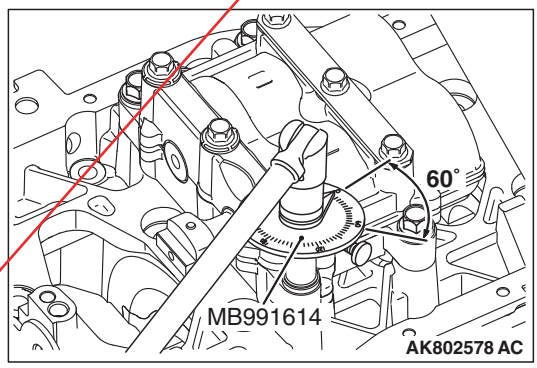

3. Use Special Tool Angle Gauge (MB991614) to tighten them an additional 60°.

>>B<< BALANCER SHAFT DRIVE HOUSING AND GEAR / COUPLING / TRUST PLATE / CRANKSHAFT GEAR INSTALLATION

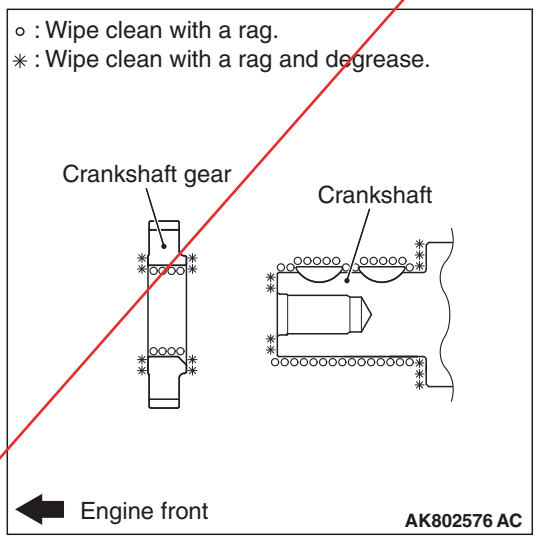

1. Use a rag to wipe off the dirt on the crankshaft gear and the crankshaft. Remove the grease on the portion shown in the illustration.

NOTE: Remove the grease in order that adhered oil cannot decrease the wear coefficient of the pressed area.

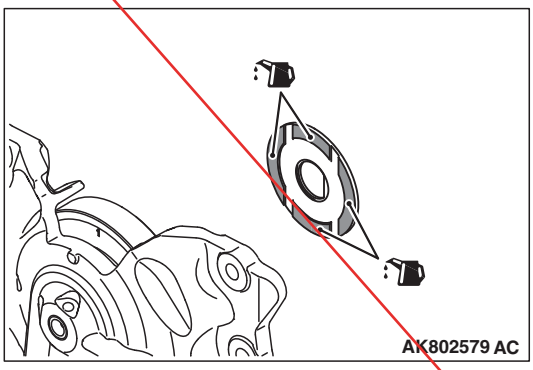

2. Apply the appropriate and minimum amount of engine oil to the thrust plate, as shown in the illustration.
3. Install all of these so that the thrust plate face where the engine oil is applied can face toward the balancer shaft drive housing & gear.

<Deleted>

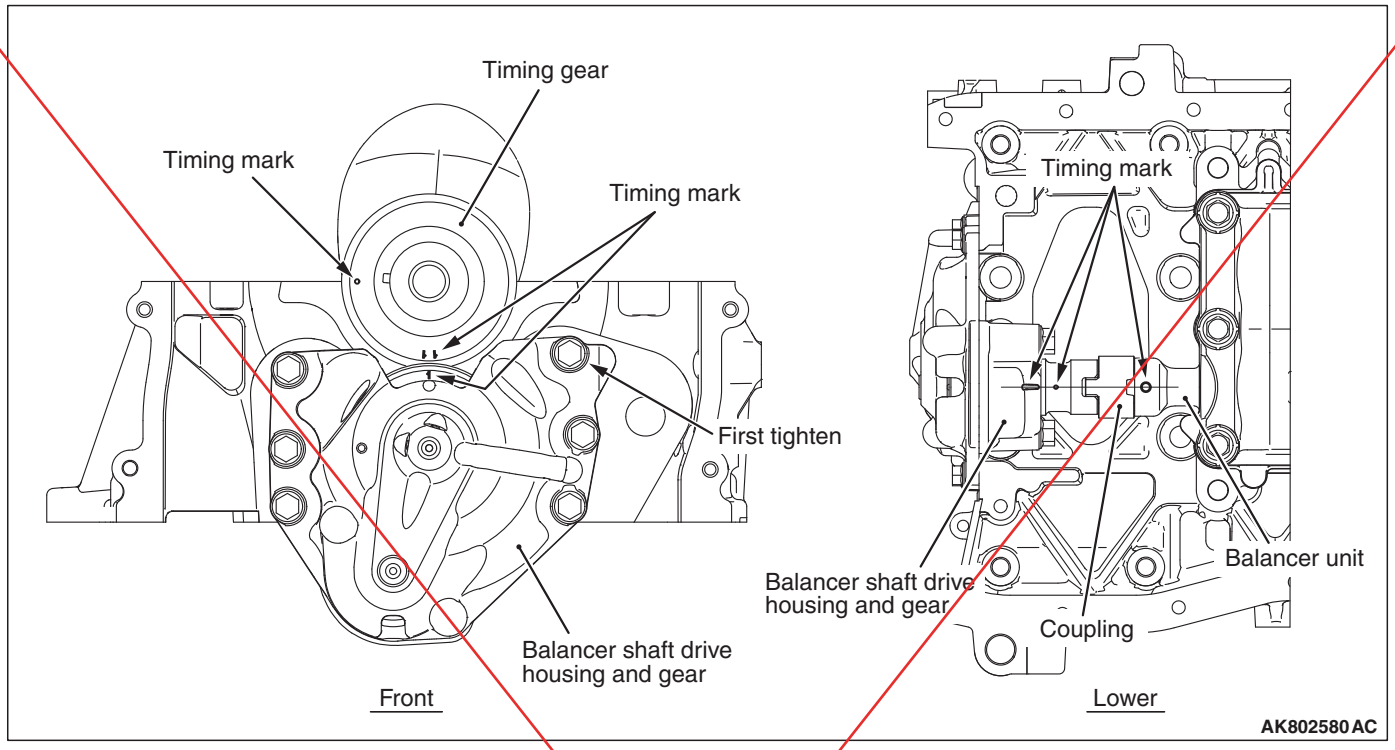

4. Install all of these aligning all the timing marks.
5. When tightening the balancer shaft drive housing and the gear, tighten the bolt shown in the illustration first.

>>C<< CRANKSHAFT SPROCKET INSTALLATION

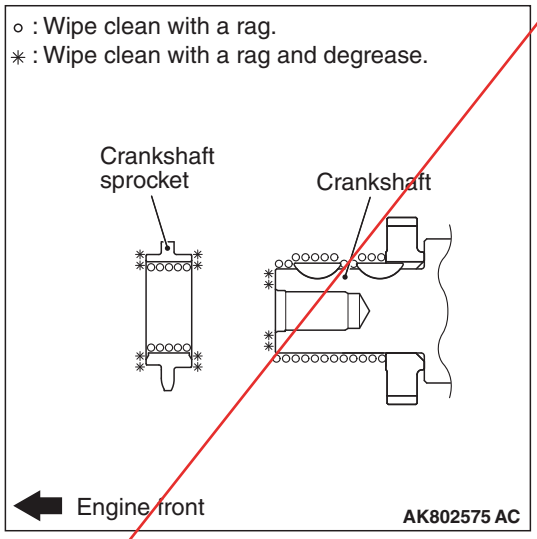

Use a rag to wipe off the dirt on the crankshaft sprocket and the crankshaft. Remove the grease on the portion shown in the illustration.

NOTE: Remove the grease in order that adhered oil cannot decrease the wear coefficient of the pressed area.

>>D<< CRANKSHAFT KEY / TIMING CHAIN / TIMING CHAIN GUIDE / TENSIONER LEVER / TIMING CHAIN TENSIONER INSTALLATION

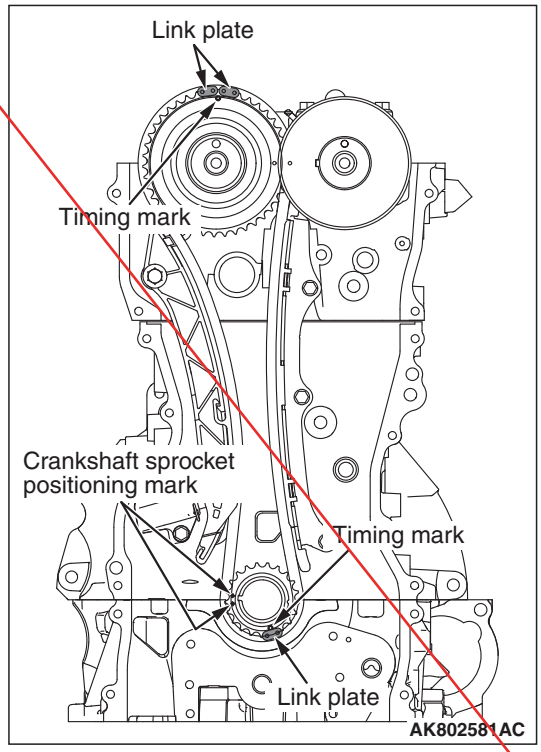

1. Install all of these so that the centers of two location marks of the crankshaft sprocket can align with the border line between the cylinder block and the lower crank case.
2. Install the crankshaft key.

NOTE: This position becomes the No.1 cylinder compression top dead center finally.

3. Align the timing mark of the camshaft and the timing mark of the crankshaft sprocket with the link plate of the timing chain to install the timing chain.
4. Tighten the chain guide to the specified torque of 11 ± 3 N·m.
5. Tighten the tensioner lever to the specified torque of 24 ± 3 N·m. After the installation, check that the turn direction has flexibility at the bolt support point.
6. Tighten the timing chain tensioner to the specified torque of 11 ± 3 N·m.

⚠ *WARNING*

If the timing chain tensioner set pin (fixed wire) suddenly comes off the timing chain tensioner, it is very dangerous because the plunger jumps out.

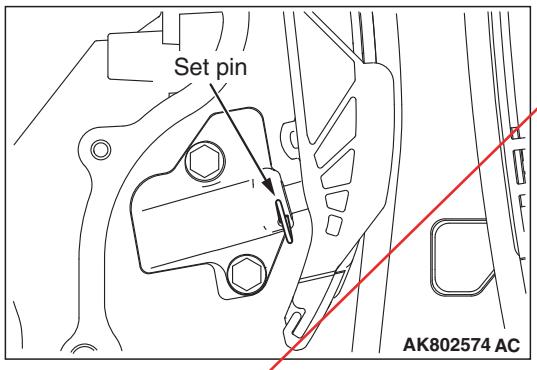

7. After that, pull out the set pin (fixed wire) to give tension to the timing chain.

   Check that the timing chain tensioner plunger fits securely into the tensioner lever groove.

   Check that the timing chain link securely engages with the gear without going beyond.

   Check that the timing chain does not deviate from the chain guide and the tensioner lever chain running surface.
8. Check that each timing mark aligns with two link plates of the timing chain.

INSPECTION

M1113026701023

VALVE CLEARANCE ADJUSTMENT

Measure the valve clearance as illustrated.

⚠ CAUTION

The crankshaft should always be rotated clockwise.

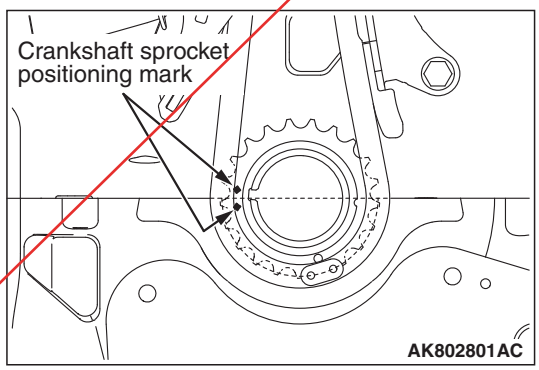

1. Rotate the crankshaft clockwise. Align the border line, which is between the cylinder block and the lower crankcase, with the center that is between two crankshaft sprocket locating marks.(Set the No. 1 cylinder to TDC on the compression stroke.)

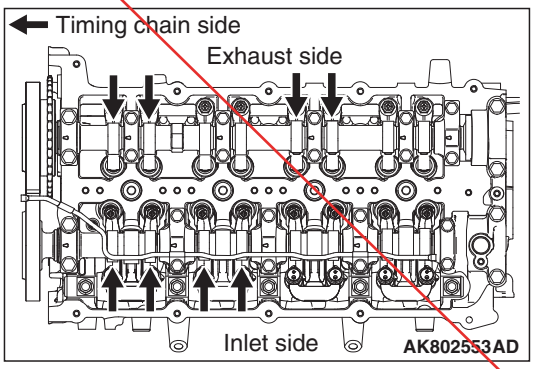

2. Now, the valve clearance (shown with an arrow) can be measured.

<Deleted>

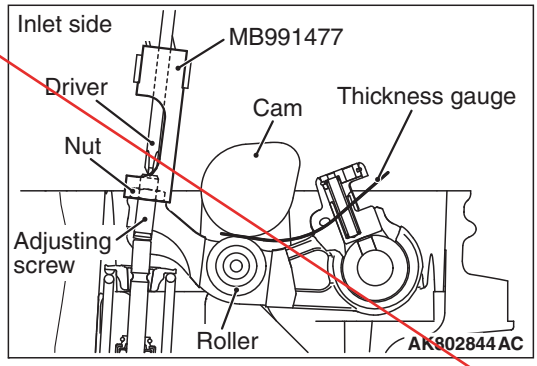

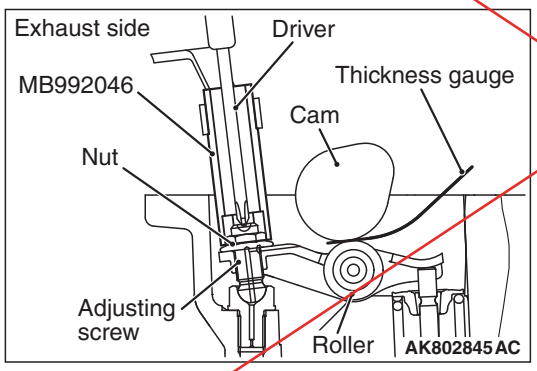

3. Using a thickness gauge, measure the clearance between the cam and the roller.

Standard value
Inlet side: 0.08 ± 0.03 mm
Exhaust side: 0.16 ± 0.03 mm

4. While holding the adjusting screw with a driver to prevent it from turning, tighten the lock nut to the specified torque using the special tool, valve adjusting socket.

Special tool (valve adjusting socket)
Inlet side: MB991477
Exhaust side: MB992046

Specified torque
Inlet side: 9.0 ± 1.0 N·m
Exhaust side: 9.8 ± 1.0 N·m

5. Turn the crankshaft 360° clockwise to bring No. 4 cylinder to the top dead centre position.

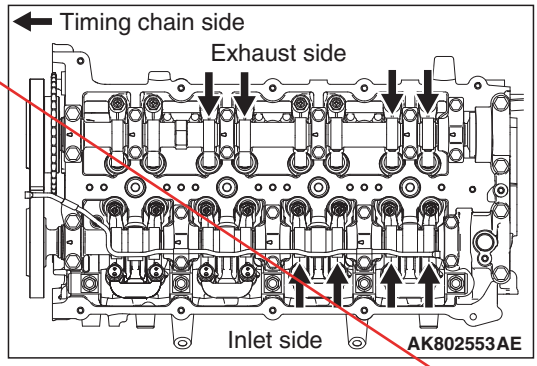

6. Adjust the valve clearance at points shown in the illustration.

TIMING CHAIN AND CAMSHAFT

REMOVAL AND INSTALLATION

M1113038300018

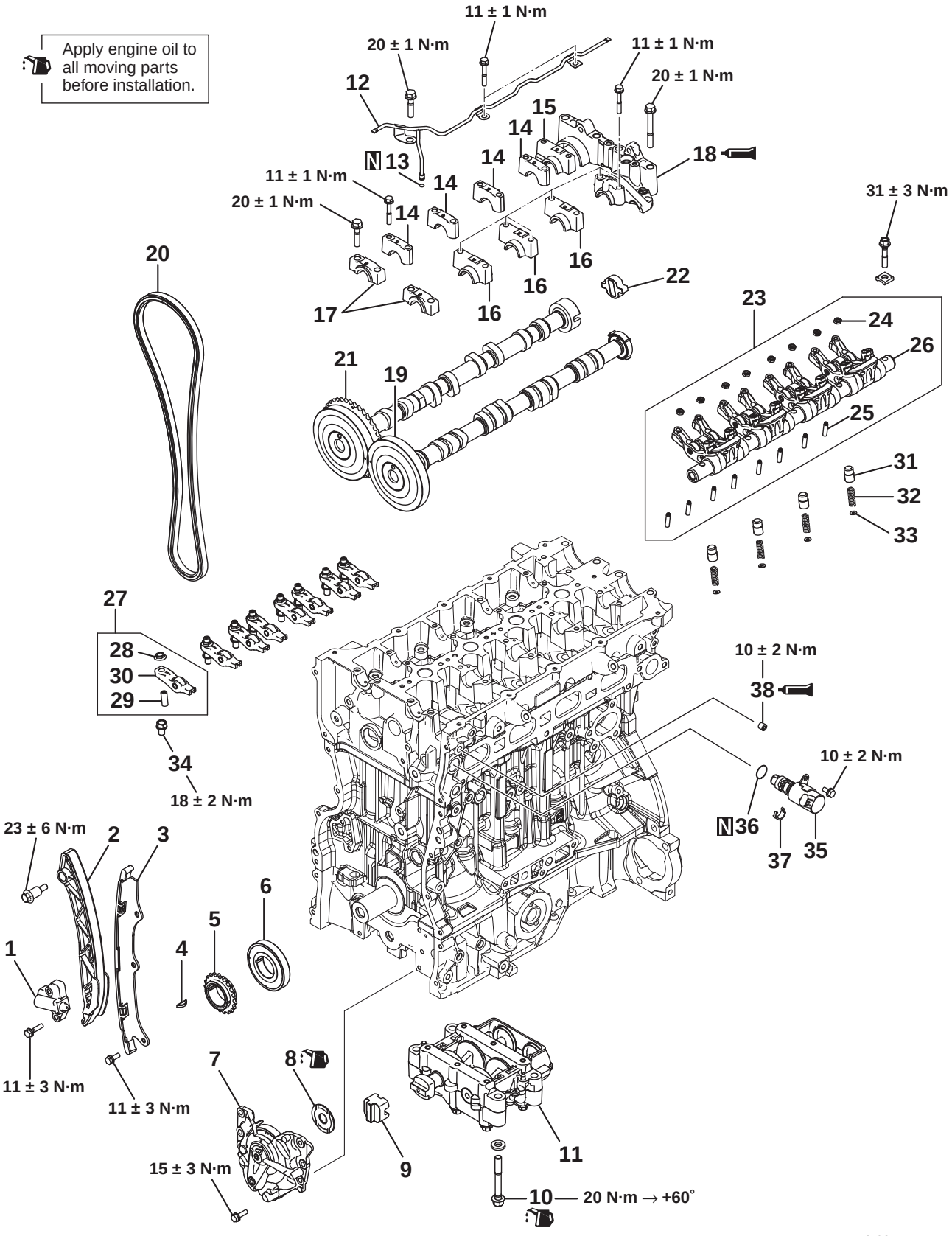

Removal steps

<<A>> >>I<< 1. Timing chain tensioner
>>I<< 2. Tensioner lever
>>I<< 3. Timing chain guide
>>I<< 4. Crankshaft key
>>H<< 5. Crankshaft sprocket
>>G<< 6. Crankshaft gear
>>G<< 7. Balancer shaft drive housing and gear
>>G<< 8. Trust plate
>>G<< 9. Coupling
>>F<< 10. Balancer unit bolt
>>F<< 11. Balancer unit*
12. Inlet oil pipe
13. O-ring
<<B>> >>E<< 14. Right A camshaft bearing cap
<<B>> >>E<< 15. Right B camshaft bearing cap
<<B>> >>E<< 16. Left camshaft bearing cap
<<B>> >>E<< 17. Front camshaft bearing cap
<<B>> >>E<< 18. Rear camshaft bearing cap
>>D<< 19. Inlet camshaft
>>D<< 20. Timing chain
>>D<< 21. Exhaust camshaft
>>C<< 22. Coupling
<<C>> 23. Rocker arm and shaft assembly
24. Nut
25. Adjusting screw
26. Rocker arm and shaft
27. Exhaust rocker arm assembly
28. Nut
29. Adjusting screw
30. Rocker arm
31. Piston (T-lever)
32. Piston spring
33. Piston spring seat
34. Pivot bolt
>>B<< 35. Oil feeder control valve (OCV)
>>B<< 36. O-ring
37. OCV filter
>>A<< 38. Taper plug

*NOTE: *:The balancer unit must not be overhauled for the assembly assurance.*

REMOVAL SERVICE POINTS

<<A>> TIMING CHAIN TENSIONER REMOVAL

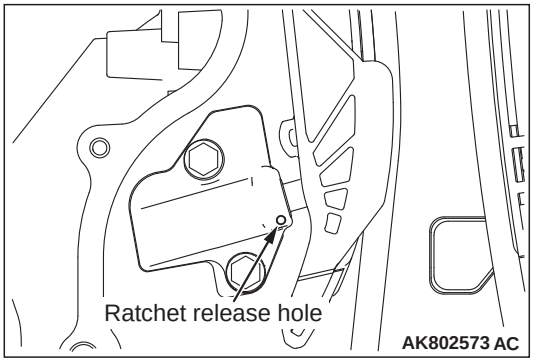

1. Push the tensioner lever by hand and push in the plunger of the timing chain tensioner until it hits the bottom. Then, insert a hard wire (piano wire or the like) of ϕ1.0 or hexagonal bar wrench (1.0 mm) into the fixing hole of the plunger.

⚠ WARNING

If the timing chain tensioner set pin (fixed wire) suddenly comes off the timing chain tensioner, it is very dangerous because the plunger jumps out.

2. Remove the timing chain tensioner.

NOTE: At that time, the timing chain cannot be removed.

<<B>> RIGHT "A" CAMSHAFT BEARING CAP / RIGHT "B" CAMSHAFT BEARING CAP / LEFT CAMSHAFT BEARING CAP / FRONT CAMSHAFT BEARING CAP / REAR CAMSHAFT BEARING CAP REMOVAL

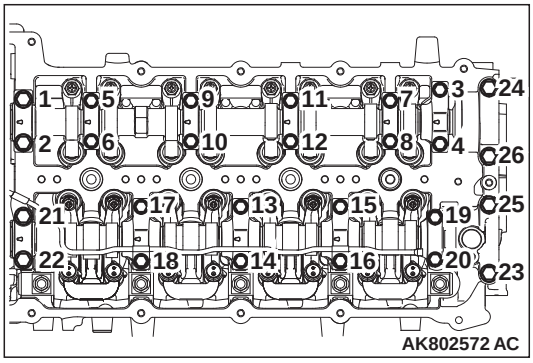

⚠ CAUTION

Loosing the installation bolts for the camshaft bearing cap at the same time causes the valve spring force, which makes the installation bolts jump out, resulting in the damaged threads. Gradually loosen them four or five times, not in one time.

Remove the installation bolts of each camshaft bearing cap in the order shown in the illustration.

<<C>> ROCKER ARM AND SHAFT ASSEMBLY REMOVAL

⚠ CAUTION

Never overhaul the rocker arm and the rocker shaft assembly.

INSTALLATION SERVICE POINTS

>>A<< TAPER PLUG INSTALLATION

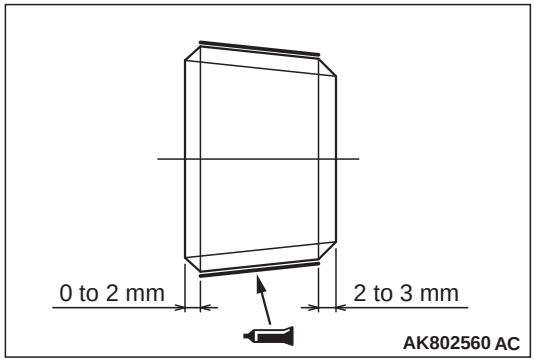

If the taper plug is reused, apply the sealant to the portion shown in the illustration.

Specified sealant:
Three bond 2403 or equivalent

>>B<< O-RING / OIL FEEDER CONTROL VALVE (OCV) INSTALLATION

⚠ CAUTION

- **The O-ring must not be reused.**
- **Wind non-adhesive tape (seal tape, etc.) around the notch of the oil passage of the oil feeder control valve before installing the O-ring to prevent damage. Damage to the O-ring causes oil leakage.**

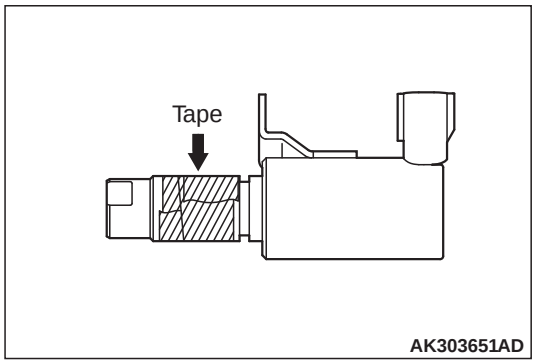

1. Apply a small amount of engine oil to the O-ring of the oil feeder control valve.
2. Install the oil feeder control valve to the cylinder head.
3. Tighten the oil feeder control bolts to the specified torque of 10 ± 2 N·m.

>>C<< COUPLING INSTALLATION

Apply oil to the entire coupling to install the coupling to the slit portion of the exhaust camshaft rear end.

NOTE: Do not install it wrongly. Do not drop it.

>>D<< EXHAUST CAMSHAFT / TIMING CHAIN / INLET CAMSHAFT INSTALLATION

1. Install the exhaust camshaft.

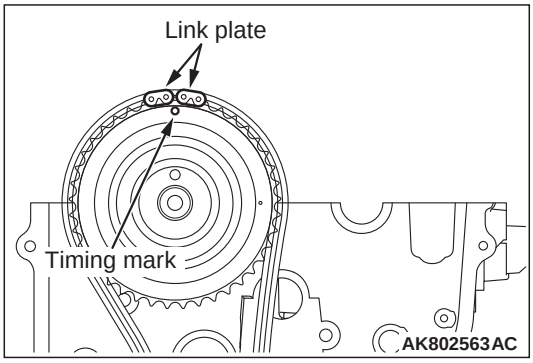

2. Align the timing chain link plate with the timing mark of the exhaust camshaft to loop the timing chain.

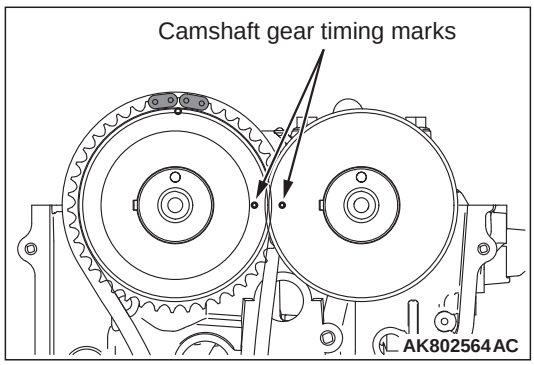

3. Install the inlet camshaft, Align the timing marks on each camshaft gear to install them.

>>E<< REAR CAMSHAFT BEARING CAP / FRONT CAMSHAFT BEARING CAP / LEFT CAMSHAFT BEARING CAP / RIGHT "B" CAMSHAFT BEARING CAP / RIGHT "A" CAMSHAFT BEARING CAP INSTALLATION

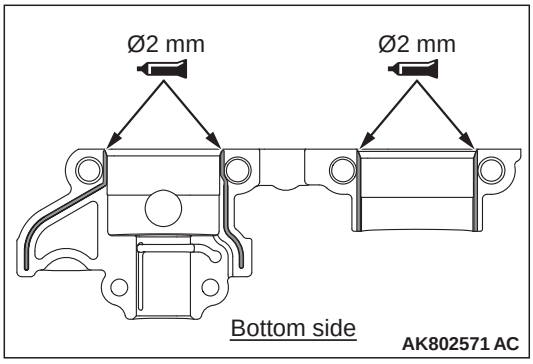

1. Apply the liquid gasket to the rear camshaft bearing cap, as shown in the illustration.

   Specified sealant:
   Three bond 1217G or equivalent

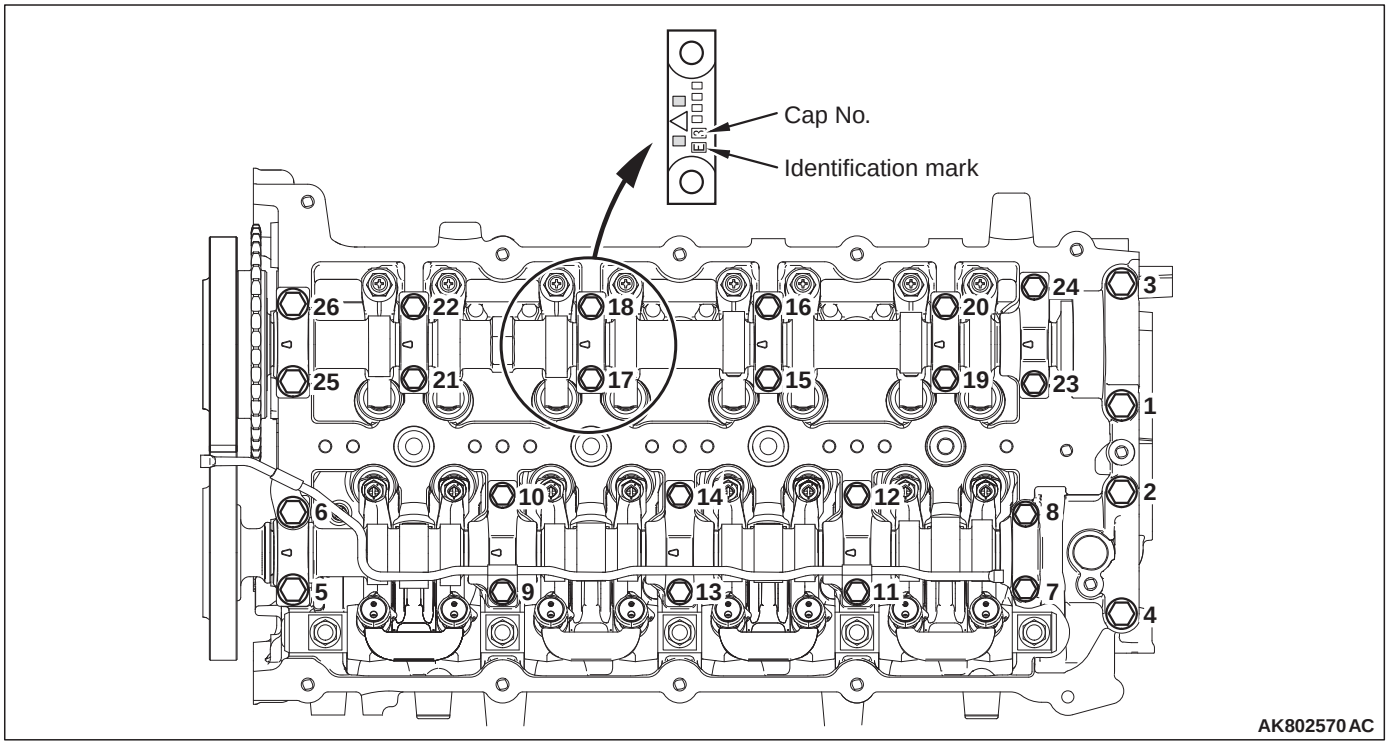

2. Install each camshaft bearing cap to the cylinder head.

   NOTE: Check the identification codes regarding the cap No. Check whether it is for the inlet side or the exhaust side.

   Identification mark (stamped on each camshaft bearing cap)
   I: Inlet side
   E: Exhaust side

3. Install a new O-ring to the oil pipe.
4. Install the oil pipe to the camshaft bearing cap.
5. Tighten the camshaft bearing cap bolts to the specified torque in the order shown in the illustration.

Specified torque
M6: 11 ± 1 N·m
M8: 20 ± 1 N·m

>>F<< BALANCER UNIT / BALANCER UNIT BOLT INSTALLATION

1. Apply the appropriate and minimum amount of engine oil to the balance unit bolt thread portion and the lower portion of the flange.

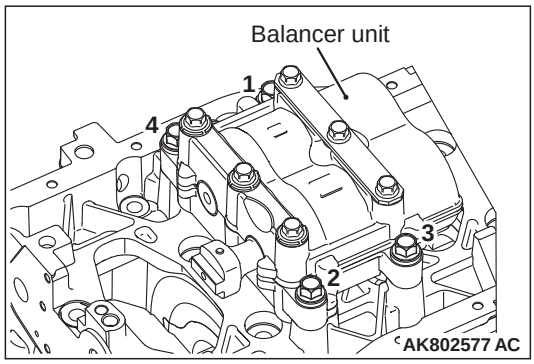

2. Install the balancer unit to the lower crankcase and tighten them to the tighten torque of 20 N·m in the order shown in the illustration.

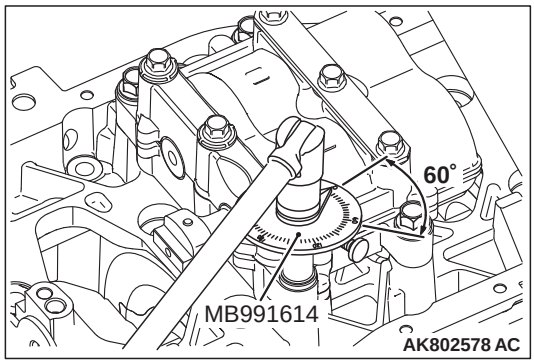

3. Use Special Tool Angle Gauge (MB991614) to tighten them an additional 60°.

>>G<< COUPLING / TRUST PLATE / BALANCER SHAFT DRIVE HOUSING AND GEAR / CRANKSHAFT GEAR INSTALLATION

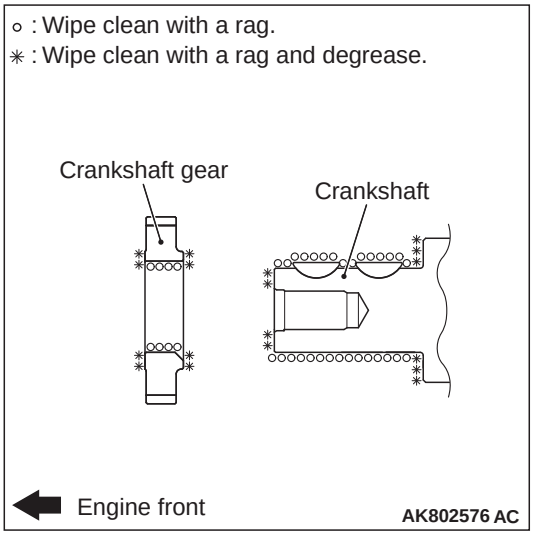

1. Use a rag to wipe off the dirt on the crankshaft gear and the crankshaft. Remove the grease on the portion shown in the illustration.

   NOTE: Remove the grease in order that adhered oil cannot decrease the wear coefficient of the pressed area.

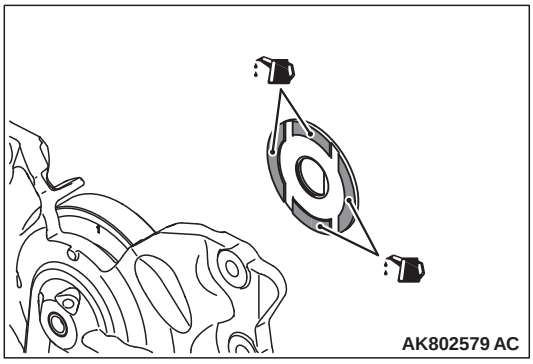

2. Apply the appropriate and minimum amount of engine oil to the thrust plate, as shown in the illustration.
3. Install all of these so that the thrust plate face where the engine oil is applied can face toward the balancer shaft drive housing and gear.

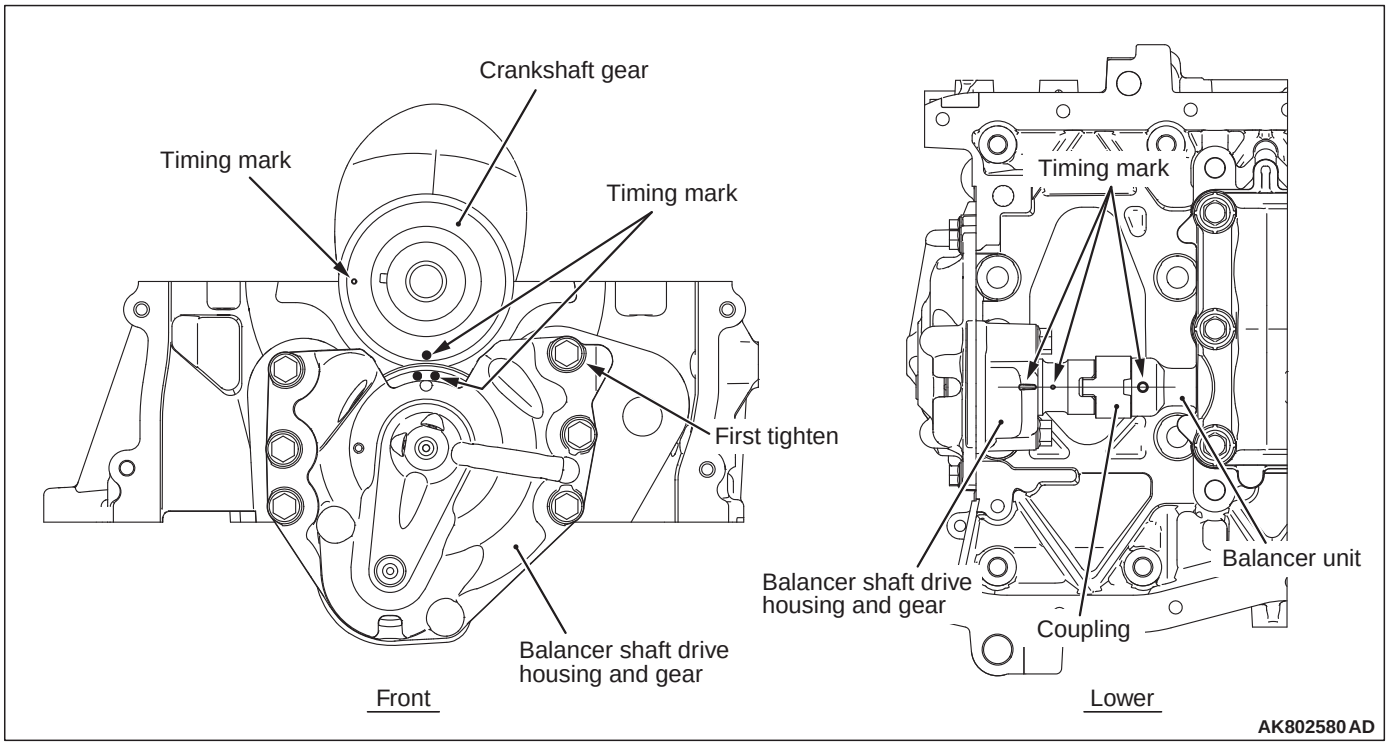

4. Install all of these aligning all the timing marks.
5. When tightening the balancer shaft drive housing and the gear, tighten the bolt shown in the illustration first.

>>H<< CRANKSHAFT SPROCKET INSTALLATION

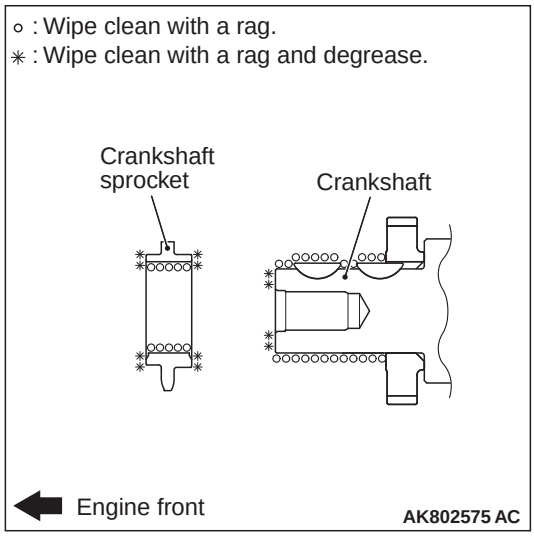

Use a rag to wipe off the dirt on the crankshaft sprocket and the crankshaft. Remove the grease on the portion shown in the illustration.

NOTE: Remove the grease in order that adhered oil cannot decrease the wear coefficient of the pressed area.

>>I<< CRANKSHAFT KEY / TIMING CHAIN GUIDE / TENSIONER LEVER / TIMING CHAIN TENSIONER INSTALLATION

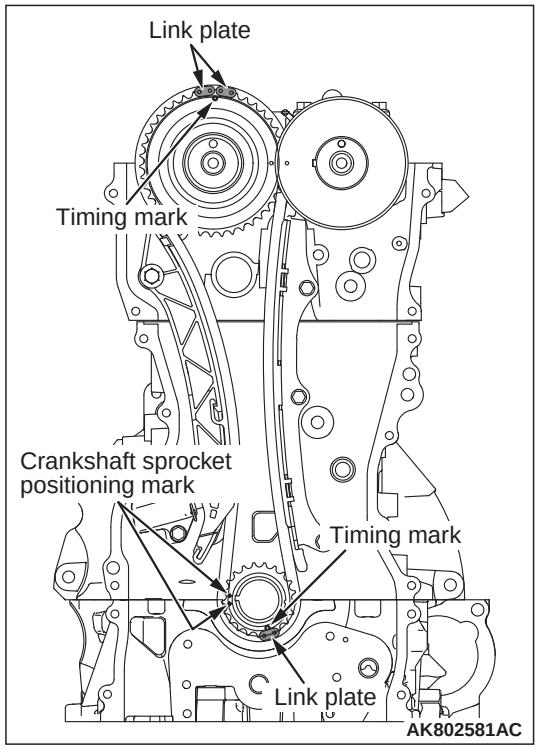

1. Install all of these so that the centres of two location marks of the crankshaft sprocket can align with the border line between the cylinder block and the lower crank case.
2. Install the crankshaft key.

NOTE: This position becomes the No.1 cylinder compression top dead centre finally.

3. Align the timing mark of the camshaft and the timing mark of the crankshaft sprocket with the link plate of the timing chain to install the timing chain.
4. Tighten the chain guide to the specified torque of 11 ± 3 N·m.
5. Tighten the tensioner lever to the specified torque of 24 ± 3 N·m. After the installation, check that the turn direction has flexibility at the bolt support point.
6. Tighten the timing chain tensioner to the specified torque of 11 ± 3 N·m.

⚠ ***WARNING***

If the timing chain tensioner set pin (fixed wire) suddenly comes off the timing chain tensioner, it is very dangerous because the plunger jumps out.

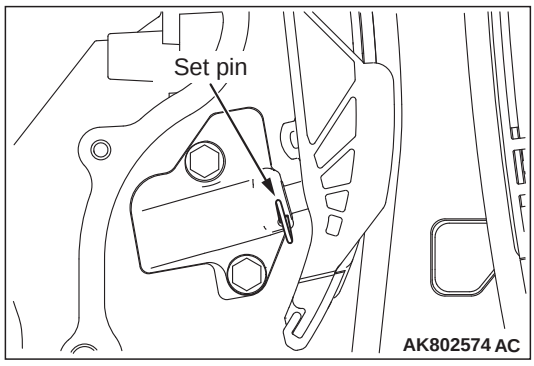

7. After that, pull out the set pin (fixed wire) to give tension to the timing chain.

   Check that the timing chain tensioner plunger fits securely into the tensioner lever groove.

   Check that the timing chain link securely engages with the gear without going beyond.

   Check that the timing chain does not deviate from the chain guide and the tensioner lever chain running surface.
8. Check that each timing mark aligns with two link plates of the timing chain.

INSPECTION

M1113038900010

VALVE CLEARANCE ADJUSTMENT

Measure the valve clearance as illustrated.

⚠ **CAUTION**

The crankshaft should always be rotated clockwise.

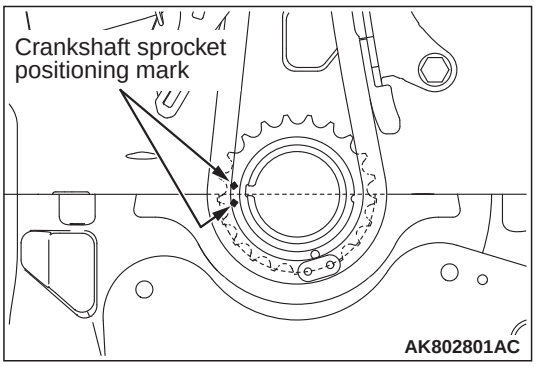

1. Rotate the crankshaft clockwise. Align the border line, which is between the cylinder block and the lower crankcase, with the center that is between two crankshaft sprocket locating marks.(Set the No. 1 cylinder to TDC on the compression stroke.)

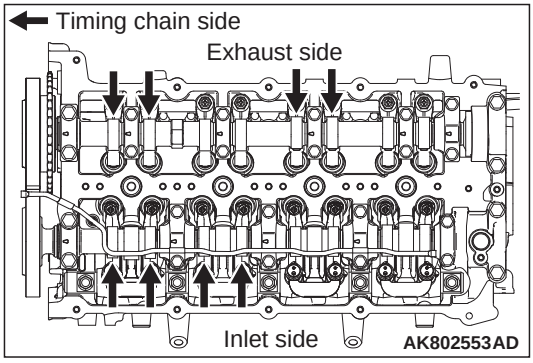

2. Now, the valve clearance (shown with an arrow) can be measured.

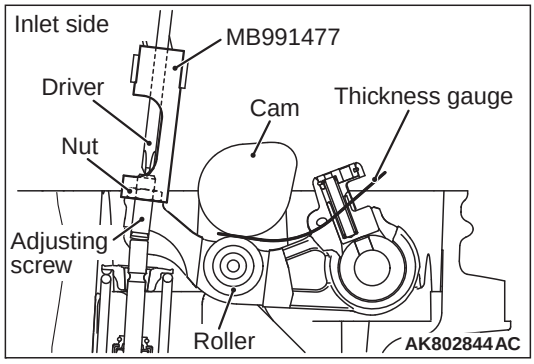

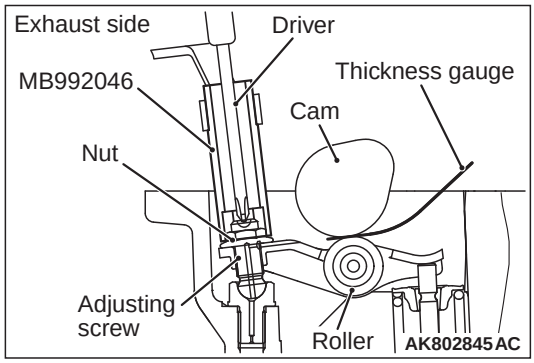

3. Using a thickness gauge, measure the clearance between the cam and the roller.

   Standard value
   Inlet side: 0.08 ± 0.03 mm
   Exhaust side: 0.16 ± 0.03 mm

4. While holding the adjusting screw with a driver to prevent it from turning, tighten the lock nut to the specified torque using the special tool, valve adjusting socket.

   Special tool (valve adjusting socket)
   Inlet side: MB991477
   Exhaust side: MB992046

   Specified torque
   Inlet side: 9.0 ± 1.0 N·m
   Exhaust side: 9.8 ± 1.0 N·m

5. Turn the crankshaft 360° clockwise to bring No. 4 cylinder to the top dead centre position.

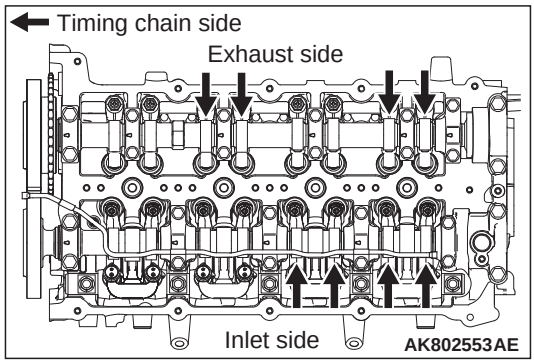

6. Adjust the valve clearance at points shown in the illustration.

CAMSHAFT INSPECTION

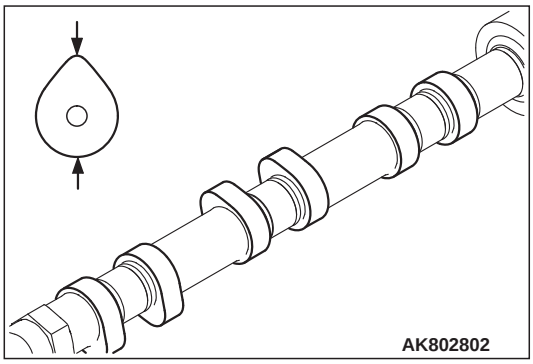

Measure the cam height (cam long diameter). If it goes beyond the limit value, replace the camshaft.

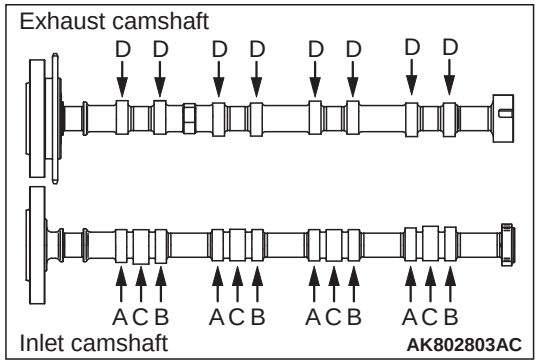

Cam	standard mm	Limit mm
A: Inlet low A	34.685	34.185
B: Inlet low B	36.414	35.914
C: Inlet high	36.790	36.290
D: Exhaust	36.669	36.169

CAMSHAFT

REMOVAL AND INSTALLATION

M1113026900820

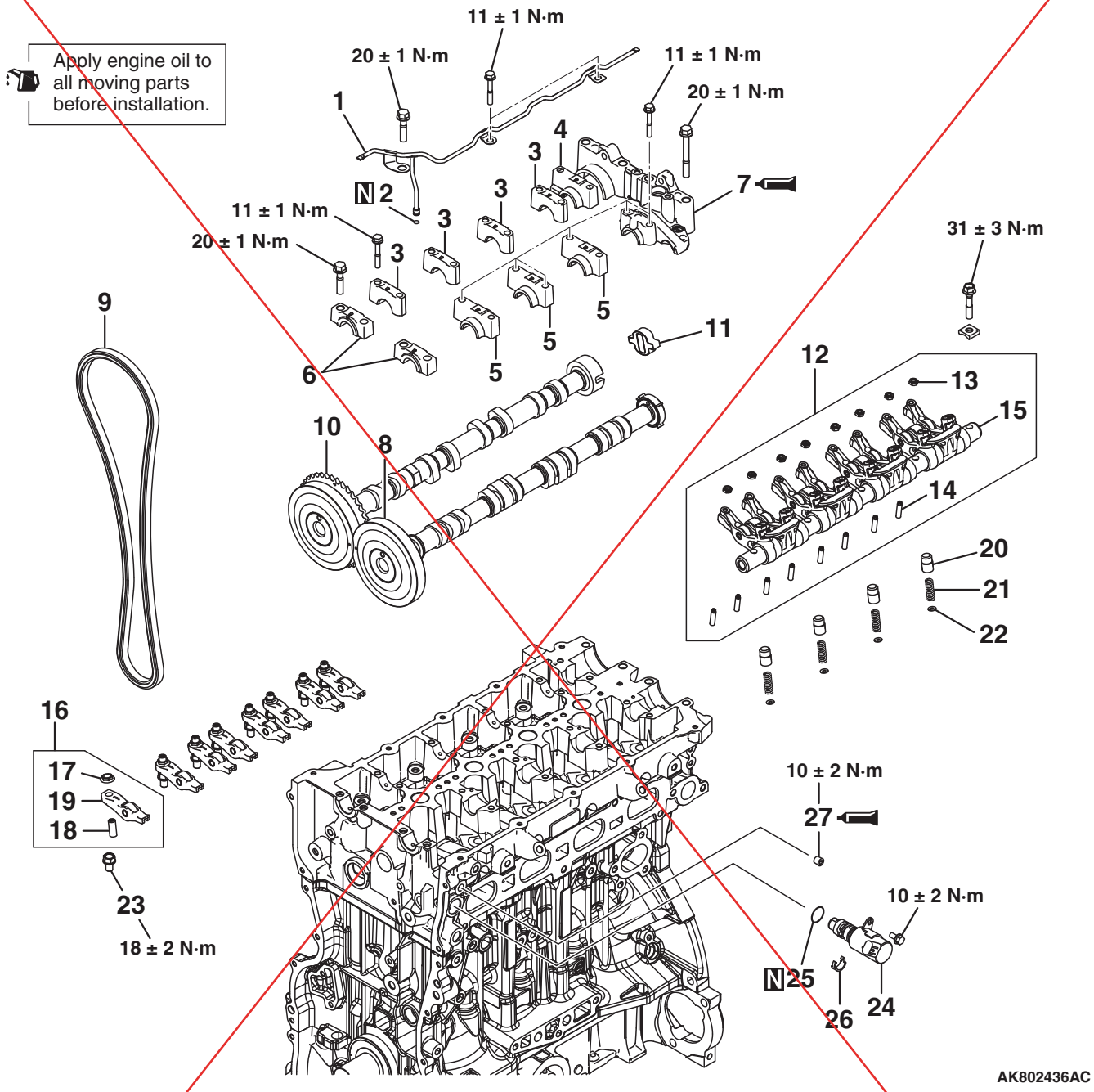

Removal steps

		1. Inlet oil pipe
		2. O-ring
<<A>>	>>E<<	3. Right A camshaft bearing cap
<<A>>	>>E<<	4. Right B camshaft bearing cap
<<A>>	>>E<<	5. Left camshaft bearing cap
<<A>>	>>E<<	6. Front camshaft bearing cap
<<A>>	>>E<<	7. Rear camshaft bearing cap
	>>D<<	8. Inlet camshaft
	>>D<<	9. Timing chain
	>>D<<	10. Exhaust camshaft
	>>C<<	11. Coupling

<<B>>

Removal steps (Continued)

12. Rocker arm and shaft assembly
13. Nut
14. Adjusting screw
15. Rocker arm and shaft
16. Exhaust rocker arm assembly
17. Nut
18. Adjusting screw
19. Rocker arm
20. Piston (T-lever)
21. Piston spring
22. Piston spring seat

Removal steps (Continued)

23. Pivot bolt
>>B<< 24. Oil feeder control valve (OCV)
25. O-ring
26. OCV filter
>>A<< 27. Taper plug

REMOVAL SERVICE POINTS

<<A>> RIGHT "B" CAMSHAFT / RIGHT "A" CAMSHAFT BEARING CAP / LEFT CAMSHAFT BEARING CAP / FRONT CAMSHAFT BEARING CAP / REAR CAMSHAFT BEARING CAP REMOVAL

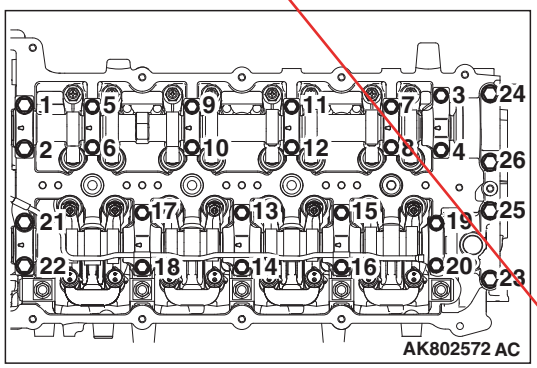

⚠ CAUTION

Loosing the installation bolts for the camshaft bearing cap at the same time causes the valve spring force, which makes the installation bolts jump out, resulting in the damaged threads. Gradually loosen them four or five times, not in one time.

Remove the installation bolts of each camshaft bearing cap in the order shown in the illustration.

<<B>> ROCKER ARM AND ROCKER SHAFT ASSEMBLY

⚠ CAUTION

Never overhaul the rocker arm and the rocker shaft assembly.

INSTALLATION SERVICE POINTS

>>A<< TAPER PLUG INSTALLATION

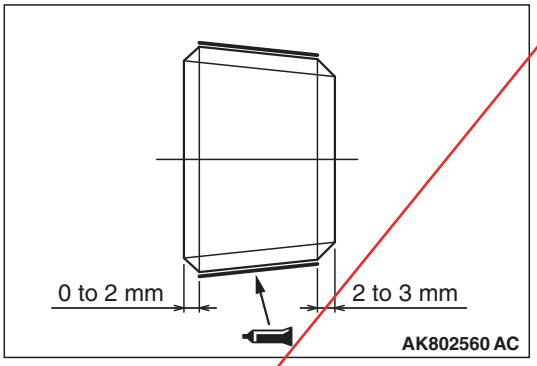

If the taper plug is reused, apply the sealant to the portion shown in the illustration.

Specified sealant:
Three bond 2403 or equivalent

>>B<< O-RING / OIL FEEDER CONTROL VALVE (OCV) INSTALLATION

⚠ CAUTION

- **The O-ring must not be reused.**
- **Wind non-adhesive tape (seal tape, etc.) around the notch of the oil passage of the oil feeder control valve before installing the O-ring to prevent damage. Damage to the O-ring causes oil leakage.**

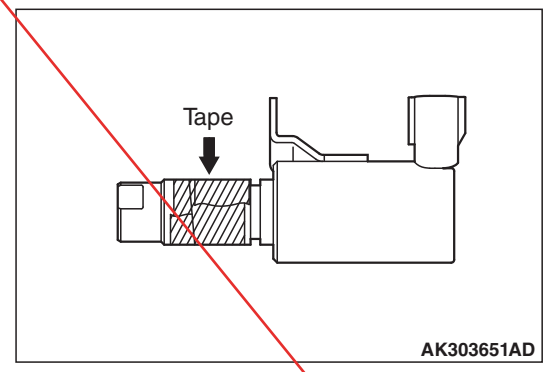

1. Apply a small amount of engine oil to the O-ring of the oil feeder control valve.
2. Install the oil feeder control valve to the cylinder head.
3. Tighten the oil feeder control bolts to the specified torque of 10 ± 2 N·m.

>>C<< COUPLING INSTALLATION

Apply oil to the entire coupling to install the coupling to the slit portion of the exhaust camshaft rear end.

NOTE: Do not install it wrongly. Do not drop it.

<Deleted>

>>D<< CAMSHAFT INLET / TIMING CHAIN / CAMSHAFT EXHAUST INSTALLATION

1. Install the exhaust camshaft.

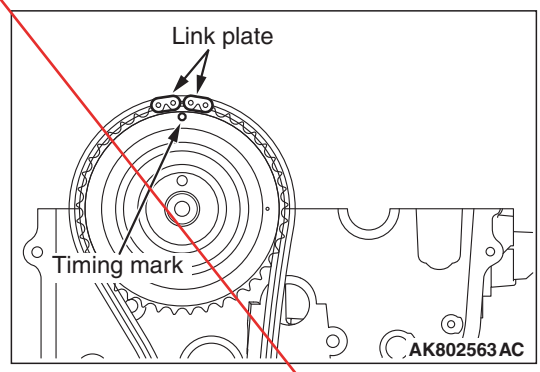

2. Align the timing chain link plate with the timing mark of the exhaust camshaft to loop the timing chain.

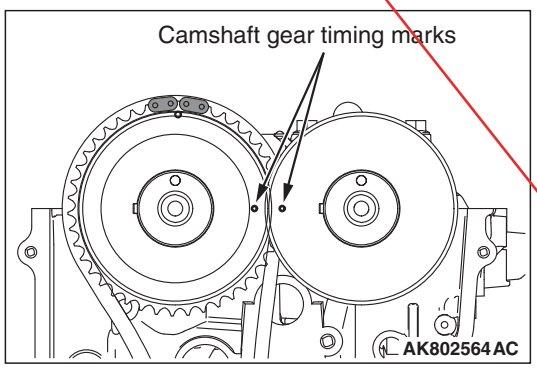

3. Install the inlet camshaft, Align the timing marks on each camshaft gear to install them.

>>E<< RIGHT "B" CAMSHAFT / RIGHT "A" CAMSHAFT BEARING CAP / LEFT CAMSHAFT BEARING CAP / FRONT CAMSHAFT BEARING CAP / REAR CAMSHAFT BEARING CAP INSTALLATION

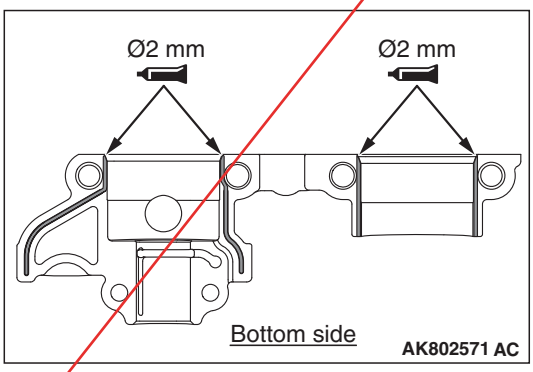

1. Apply the liquid gasket to the rear camshaft bearing cap, as shown in the illustration.

Specified sealant:
Three bond 1217G or equivalent

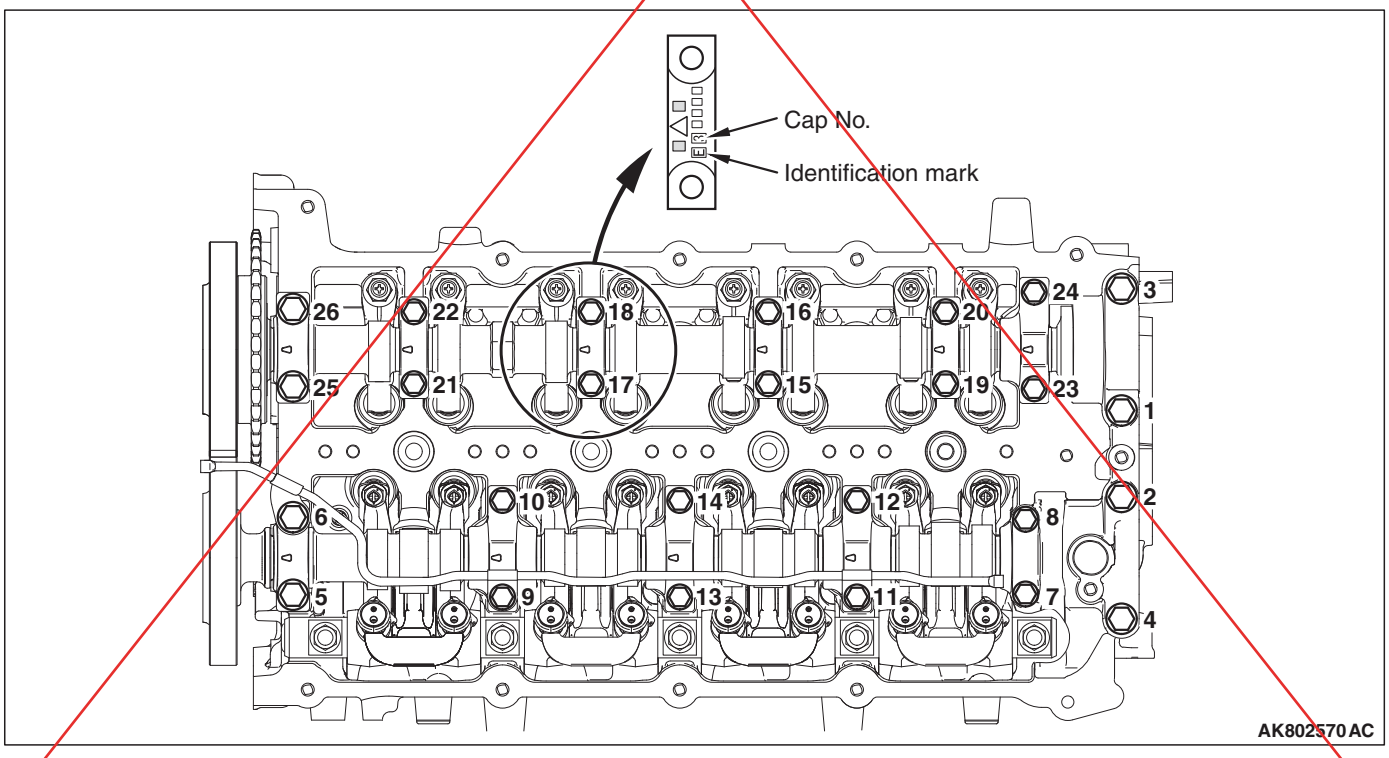

2. Install each camshaft bearing cap to the cylinder head.

NOTE: Check the identification codes regarding the cap No. Check whether it is for the inlet side or the exhaust side.

<Deleted>

Identification mark (stamped on each camshaft bearing cap)
I: Inlet side
E: Exhaust side

3. Install a new O- ring to the oil pipe.
4. Install the oil pipe to the camshaft bearing cap.
5. Tighten the camshaft bearing cap bolts to the specified torque in the order shown in the illustration.

Specified torque
M6: 11 ± 1 N·m
M8: 20 ± 1 N·m

INSPECTION

M1113027000790

CAMSHAFT

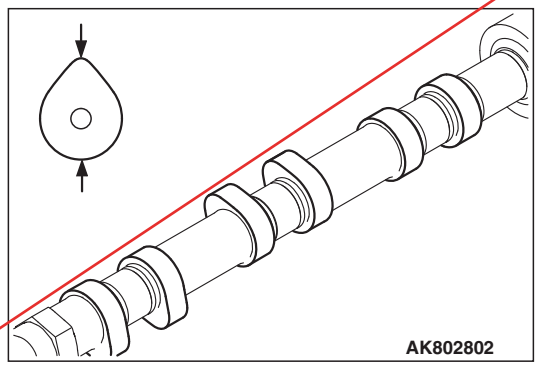

Measure the cam height (cam long diameter). If it goes beyond the limit value, replace the camshaft.

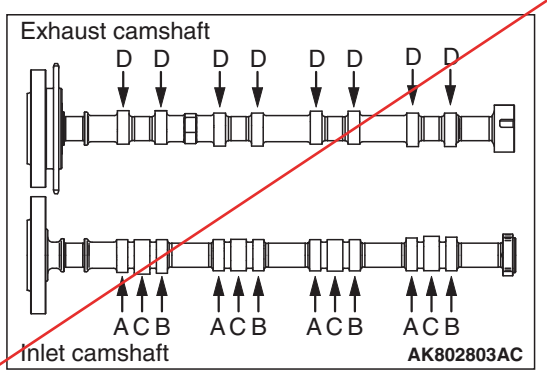

Cam	standard mm	Limit mm
A: Inlet low A	34.685	34.185
B: Inlet low B	36.414	35.914
C: Inlet high	36.790	36.290
D: Exhaust	36.669	36.169

<Correct> Attached sheet 4 (6/12 to 12/12)

Attached sheet 4 (1/12)

<Incorrect>

TIMING CHAIN

REMOVAL AND INSTALLATION

M1113026601275

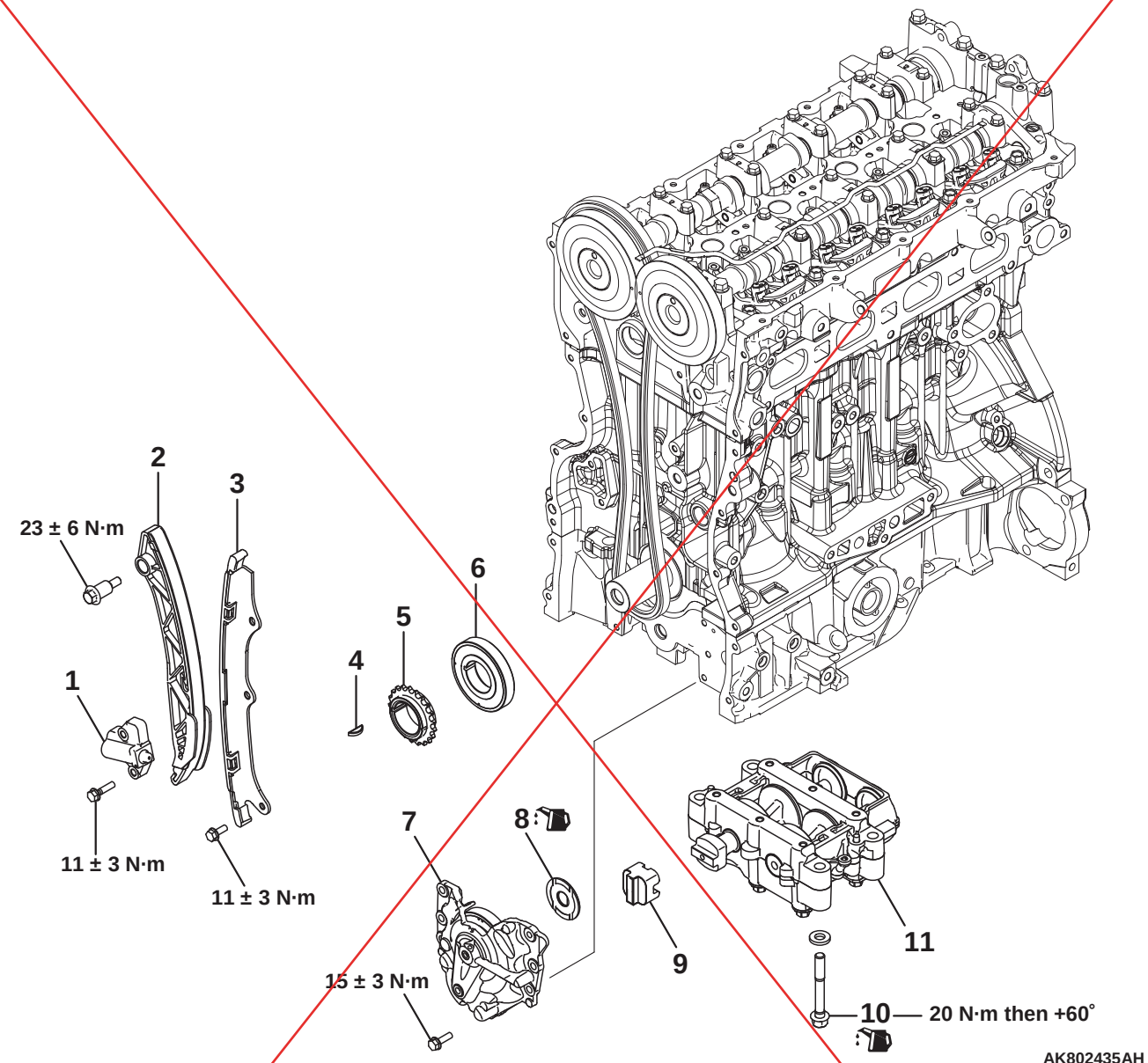

Removal steps

<<A>>	>>D<<	1.	Timing chain tensioner
	>>D<<	2.	Tensioner lever
	>>D<<	3.	Timing chain guide
	>>D<<	4.	Crankshaft key
	>>C<<	5.	Crankshaft sprocket
	>>B<<	6.	Crankshaft gear
	>>B<<	7.	Balancer shaft drive housing and gear
	>>B<<	8.	Trust plate
	>>B<<	9.	Coupling
	>>A<<	10.	Balancer unit bolt
	>>A<<	11.	Balancer unit *1

*NOTE: *1:The balancer unit must not be overhauled for the assembly assurance.*

REMOVAL SERVICE POINT

<<A>> TIMING CHAIN TENSIONER REMOVAL

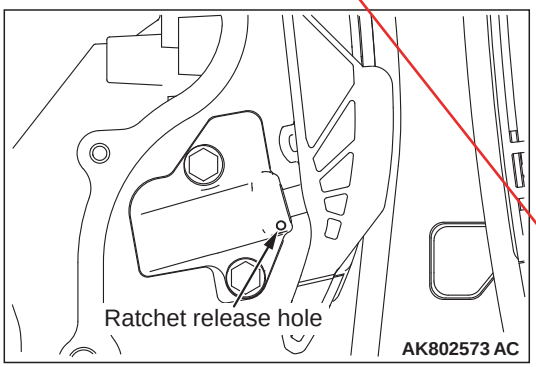

<Deleted>

1. Push the tensioner lever by hand and push in the plunger of the timing chain tensioner until it hits the bottom. Then, insert a hard wire (piano wire or the like) of ϕ1.0 or hexagonal bar wrench (1.0 mm) into the fixing hole of the plunger.

⚠ WARNING

If the timing chain tensioner set pin (fixed wire) suddenly comes off the timing chain tensioner, it is very dangerous because the plunger jumps out.

2. Remove the timing chain tensioner.

NOTE: At that time, the timing chain cannot be removed.

INSTALLATION SERVICE POINTS

>>A<< BALANCER UNIT / BALANCER UNIT BOLT INSTALLATION

1. Apply the appropriate and minimum amount of engine oil to the balance unit bolt thread portion and the lower portion of the flange.

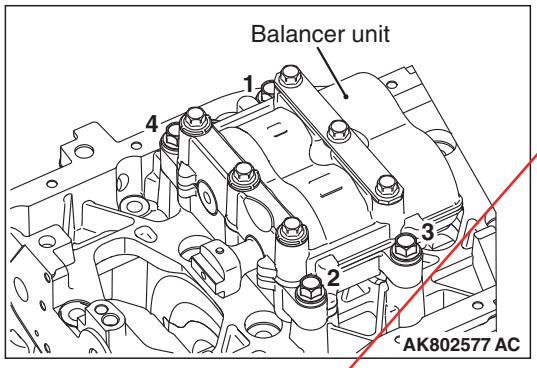

2. Install the balancer unit to the lower crankcase and tighten them to the tighten torque of 20 N·m in the order shown in the illustration.

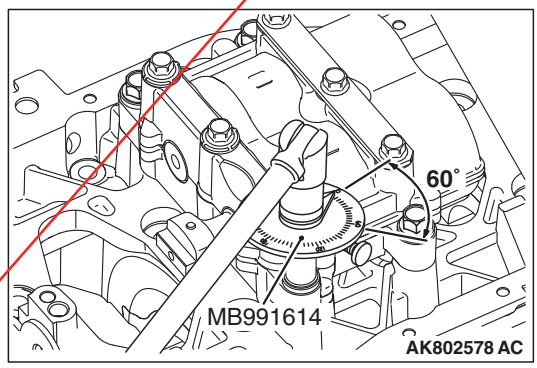

3. Use Special Tool Angle Gauge (MB991614) to tighten them an additional 60°.

>>B<< BALANCER SHAFT DRIVE HOUSING AND GEAR / COUPLING / TRUST PLATE / CRANKSHAFT GEAR INSTALLATION

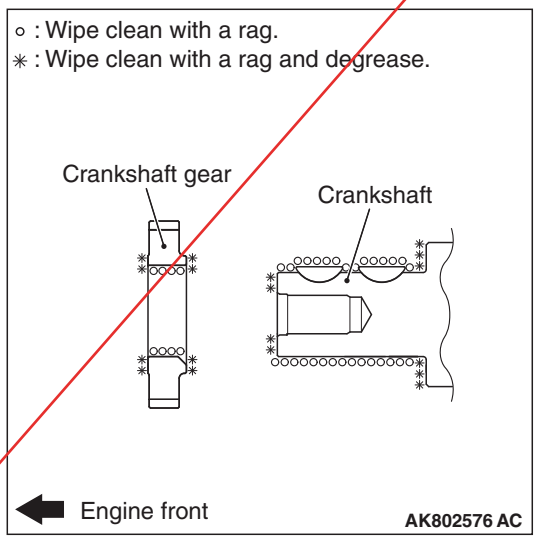

1. Use a rag to wipe off the dirt on the crankshaft gear and the crankshaft. Remove the grease on the portion shown in the illustration.

NOTE: Remove the grease in order that adhered oil cannot decrease the wear coefficient of the pressed area.

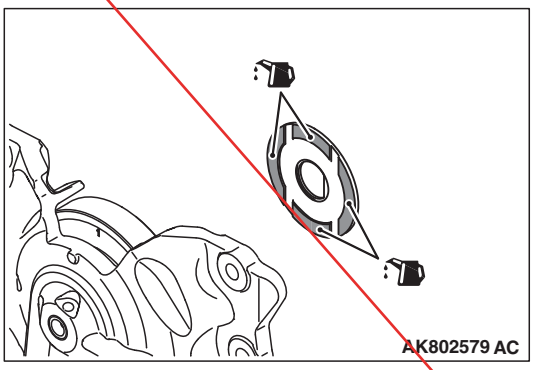

2. Apply the appropriate and minimum amount of engine oil to the thrust plate, as shown in the illustration.
3. Install all of these so that the thrust plate face where the engine oil is applied can face toward the balancer shaft drive housing & gear.

<Deleted>

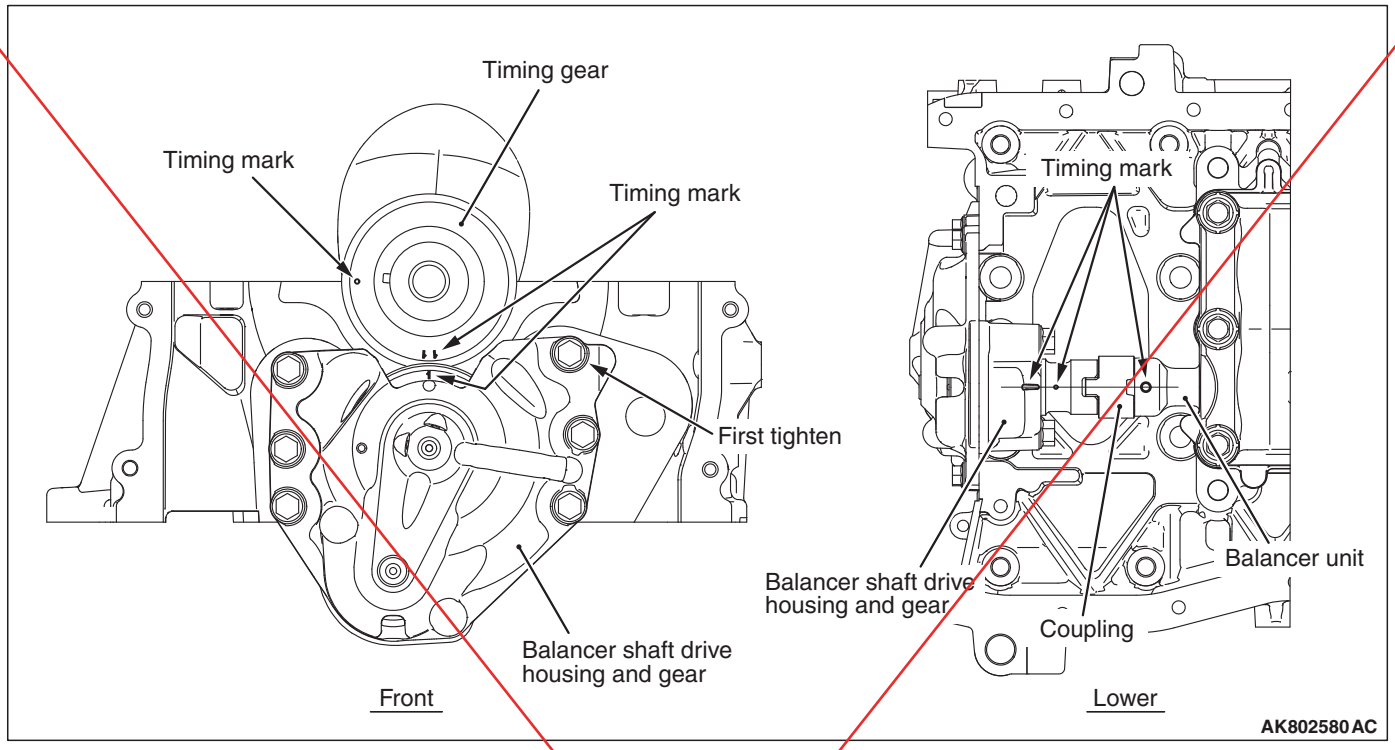

4. Install all of these aligning all the timing marks.
5. When tightening the balancer shaft drive housing and the gear, tighten the bolt shown in the illustration first.

>>C<< CRANKSHAFT SPROCKET INSTALLATION

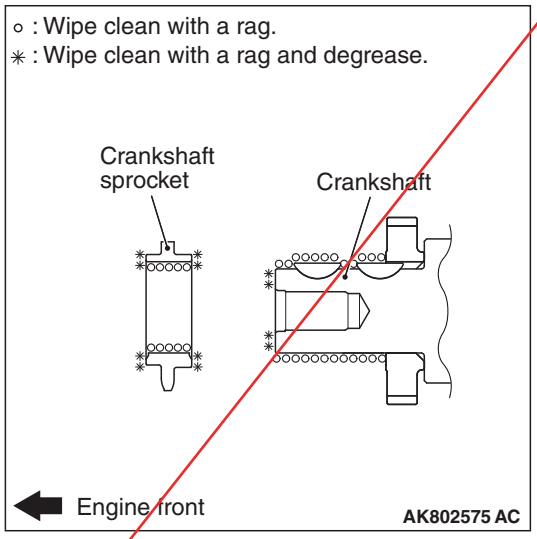

Use a rag to wipe off the dirt on the crankshaft sprocket and the crankshaft. Remove the grease on the portion shown in the illustration.

NOTE: Remove the grease in order that adhered oil cannot decrease the wear coefficient of the pressed area.

>>D<< CRANKSHAFT KEY / TIMING CHAIN GUIDE / TENSIONER LEVER / TIMING CHAIN TENSIONER INSTALLATION

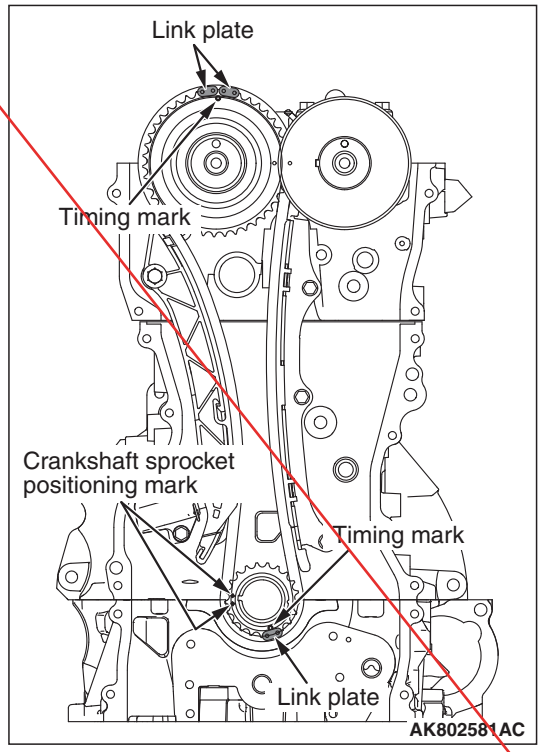

1. Install all of these so that the centres of two location marks of the crankshaft sprocket can align with the border line between the cylinder block and the lower crank case.
2. Install the crankshaft key.

NOTE: This position becomes the No.1 cylinder compression top dead centre finally.

3. Align the timing mark of the camshaft and the timing mark of the crankshaft sprocket with the link plate of the timing chain to install the timing chain.
4. Tighten the chain guide to the specified torque of 11 ± 3 N·m.
5. Tighten the tensioner lever to the specified torque of 24 ± 3 N·m. After the installation, check that the turn direction has flexibility at the bolt support point.
6. Tighten the timing chain tensioner to the specified torque of 11 ± 3 N·m.

⚠ *WARNING*

If the timing chain tensioner set pin (fixed wire) suddenly comes off the timing chain tensioner, it is very dangerous because the plunger jumps out.

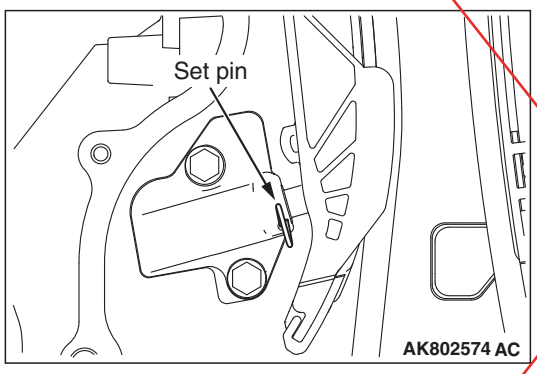

7. After that, pull out the set pin (fixed wire) to give tension to the timing chain.

   Check that the timing chain tensioner plunger fits securely into the tensioner lever groove.

   Check that the timing chain link securely engages with the gear without going beyond.

   Check that the timing chain does not deviate from the chain guide and the tensioner lever chain running surface.
8. Check that each timing mark aligns with two link plates of the timing chain.

INSPECTION

M1113026701227

VALVE CLEARANCE ADJUSTMENT

⚠ CAUTION

The crankshaft should always be rotated clockwise.

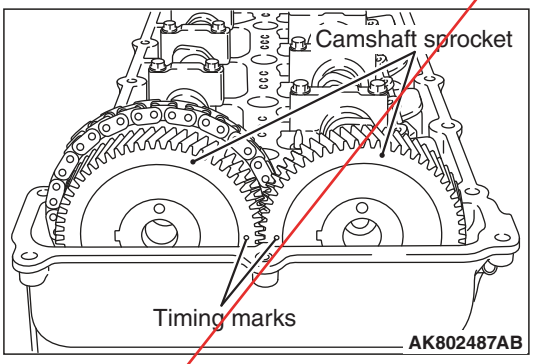

1. Align the camshaft sprocket timing marks and set the No. 1 cylinder at compression stroke top dead centre.

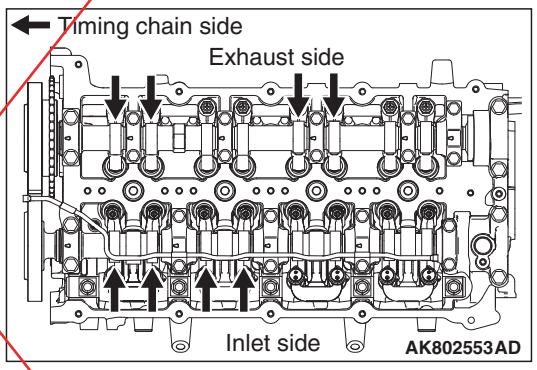

2. For the portions with the arrows shown below, measure and adjust the valve clearances by using the following procedures.

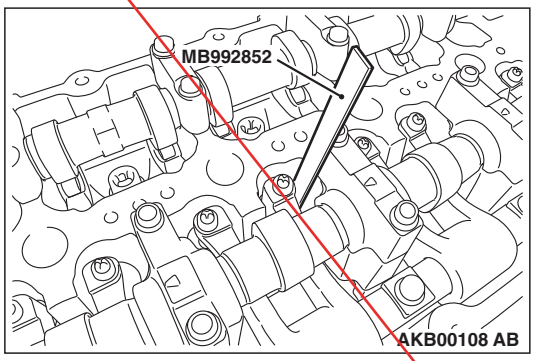

<Inlet side>

1.) Insert the special tool valve adjusting feeling gauge (MB992852) between the valve stem and the adjusting screw.

2). Adjust the clearance between the valve stem and adjusting screw to be within the standard value.

Standard value: 0.14 ± 0.03 mm

<Deleted>

⚠ CAUTION

Pay special attention that the tightening torque is not beyond this valve. If the tightening torque is beyond the valve, the valve stem would possibly bend.

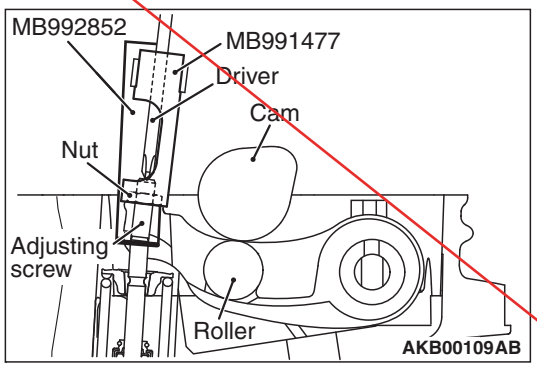

3.)While holding the adjusting screw with a screwdriver to prevent it from turning, tighten the lock nut to the specified torque using the special tool valve adjusting socket (MB991477).

Tightening torque: 9 ± 1 N·m

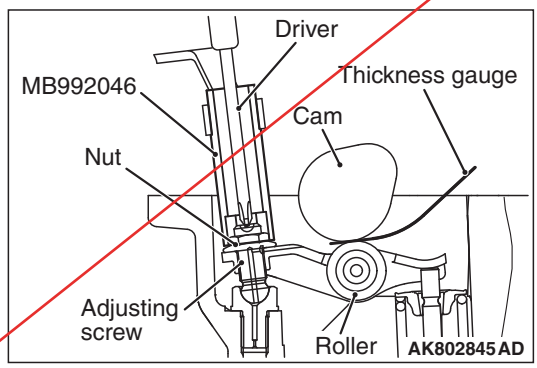

<Exhaust side>

1.)Using a thickness gauge, adjust the clearance between the cam and the roller.

Standard value: 0.16 ± 0.03 mm

⚠ CAUTION

Pay special attention that the tightening torque is not beyond this valve. If the tightening torque is beyond the valve, the valve stem would possibly bend.

2.)While holding the adjusting screw with a screwdriver to prevent it from turning, tighten the lock nut to the specified torque using the special tool(MB992046), valve adjusting socket.

Tightening torque: 9.8 ± 1 N·m

3. Turn the crankshaft 360° clockwise to bring No. 4 cylinder to the compression stroke top dead centre position.

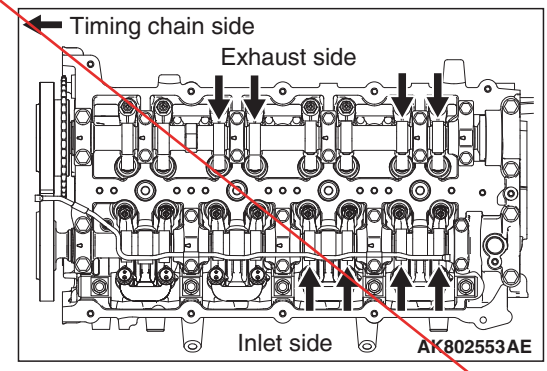

4. For the portions with the arrows shown below, measure and adjust the valve clearances by using the same procedures as ones in the Step 2.

TIMING CHAIN AND CAMSHAFT

REMOVAL AND INSTALLATION

M1113038300029

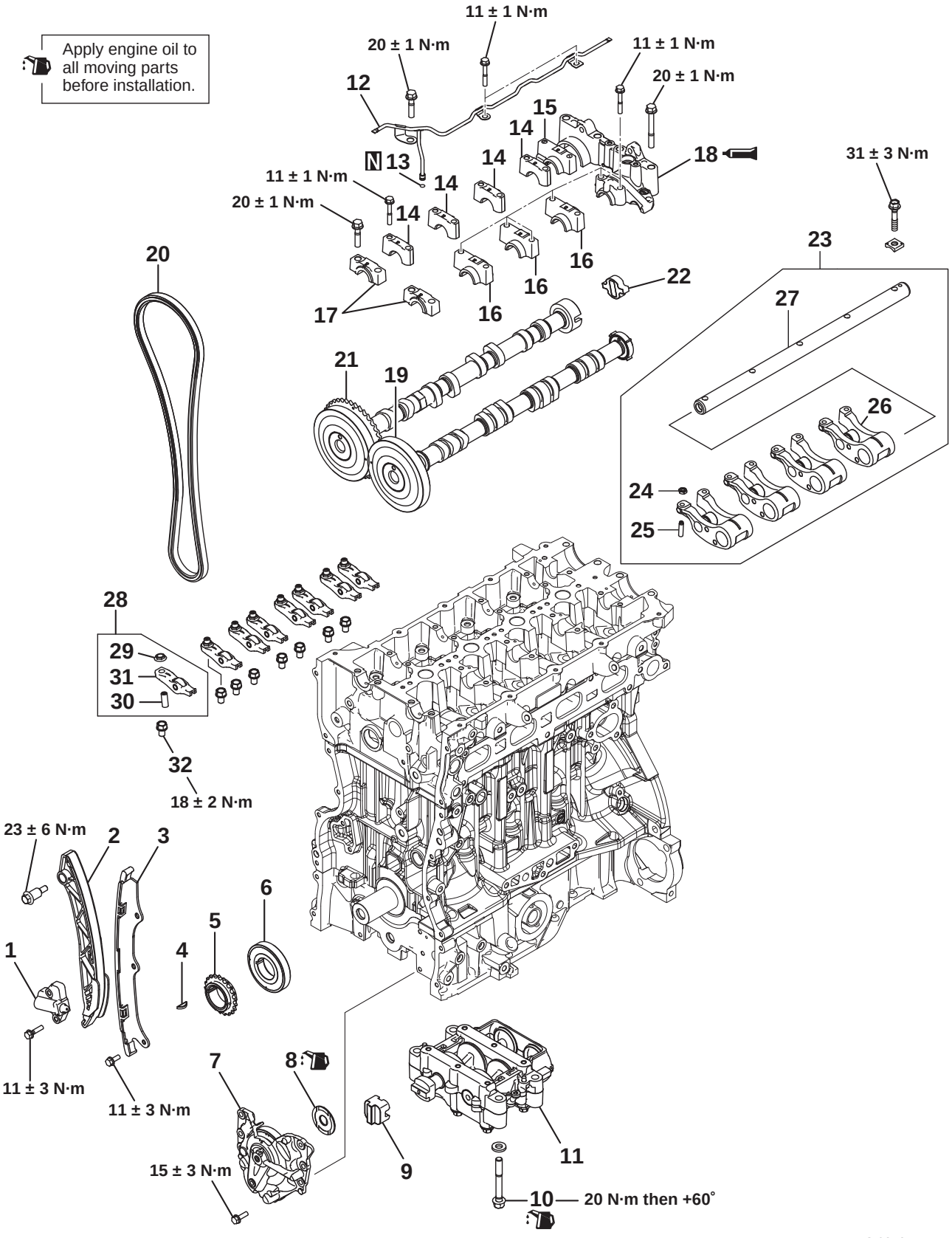

Removal steps

<<A>> >>G<< 1. Timing chain tensioner
>>G<< 2. Tensioner lever
>>G<< 3. Timing chain guide
>>G<< 4. Crankshaft key
>>F<< 5. Crankshaft sprocket
>>E<< 6. Crankshaft gear
>>E<< 7. Balancer shaft drive housing and gear
>>E<< 8. Trust plate
>>E<< 9. Coupling
>>D<< 10. Balancer unit bolt
>>D<< 11. Balancer unit*
12. Inlet oil pipe
13. O-ring
<<B>> >>C<< 14. Right A camshaft bearing cap
<<B>> >>C<< 15. Right B camshaft bearing cap
<<B>> >>C<< 16. Left camshaft bearing cap
<<B>> >>C<< 17. Front camshaft bearing cap
<<B>> >>C<< 18. Rear camshaft bearing cap
>>B<< 19. Inlet camshaft
>>B<< 20. Timing chain
>>B<< 21. Exhaust camshaft
>>A<< 22. Coupling
<<C>> 23. Rocker arm and shaft assembly
24. Nut
25. Adjusting screw
26. Inlet rocker arm
27. Inlet rocker shaft
28. Exhaust rocker arm assembly
29. Nut
30. Adjusting screw
31. Rocker arm
32. Pivot bolt

*NOTE: *:The balancer unit must not be overhauled for the assembly assurance.*

REMOVAL SERVICE POINTS

<<A>> TIMING CHAIN TENSIONER REMOVAL

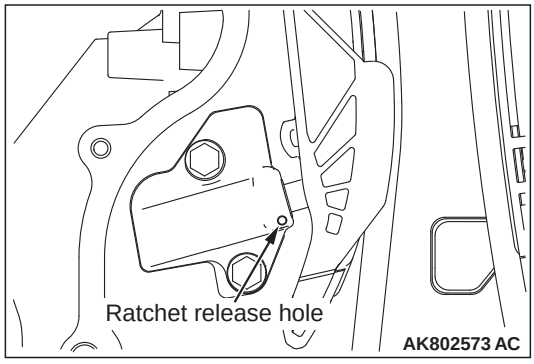

1. Push the tensioner lever by hand and push in the plunger of the timing chain tensioner until it hits the bottom. Then, insert a hard wire (piano wire or the like) of ϕ1.0 or hexagonal bar wrench (1.0 mm) into the fixing hole of the plunger.

⚠ WARNING

If the timing chain tensioner set pin (fixed wire) suddenly comes off the timing chain tensioner, it is very dangerous because the plunger jumps out.

2. Remove the timing chain tensioner.

NOTE: At that time, the timing chain cannot be removed.

<<B>> RIGHT "A" CAMSHAFT BEARING CAP / RIGHT "B" CAMSHAFT BEARING CAP / LEFT CAMSHAFT BEARING CAP / FRONT CAMSHAFT BEARING CAP / REAR CAMSHAFT BEARING CAP REMOVAL

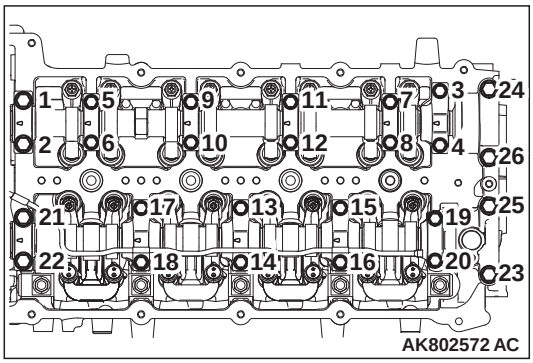

⚠ CAUTION

Loosing the installation bolts for the camshaft bearing cap at the same time causes the valve spring force, which makes the installation bolts jump out, resulting in the damaged threads. Gradually loosen them four or five times, not in one time.

Remove the installation bolts of each camshaft bearing cap in the order shown in the illustration.

<<C>> ROCKER ARM AND SHAFT ASSEMBLY REMOVAL

⚠ CAUTION

Never overhaul the rocker arm and the rocker shaft assembly.

INSTALLATION SERVICE POINTS

>>A<< COUPLING INSTALLATION

Apply oil to the entire coupling to install the coupling to the slit portion of the exhaust camshaft rear end.

NOTE: Do not install it wrongly. Do not drop it.

>>B<< EXHAUST CAMSHAFT / TIMING CHAIN / INLET CAMSHAFT INSTALLATION

1. Install the exhaust camshaft.

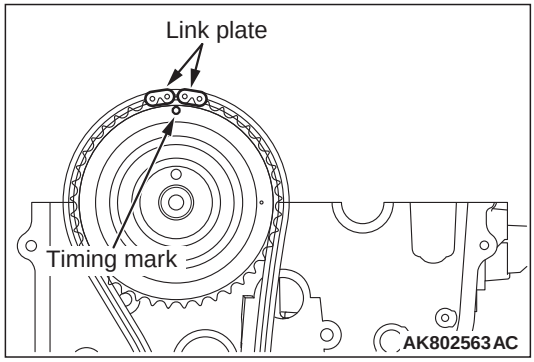

2. Align the timing chain link plate with the timing mark of the exhaust camshaft to loop the timing chain.

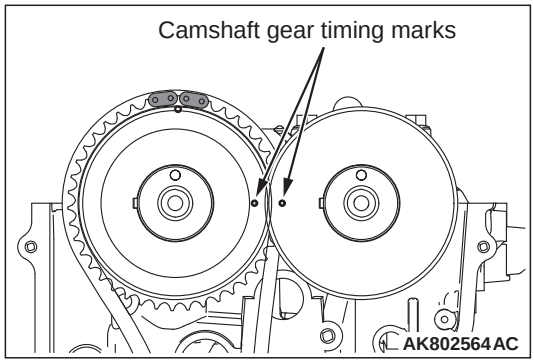

3. Install the inlet camshaft, Align the timing marks on each camshaft gear to install them.

>>C<< REAR CAMSHAFT BEARING CAP / FRONT CAMSHAFT BEARING CAP / LEFT CAMSHAFT BEARING CAP / RIGHT "B" CAMSHAFT BEARING CAP / RIGHT "A" CAMSHAFT BEARING CAP INSTALLATION

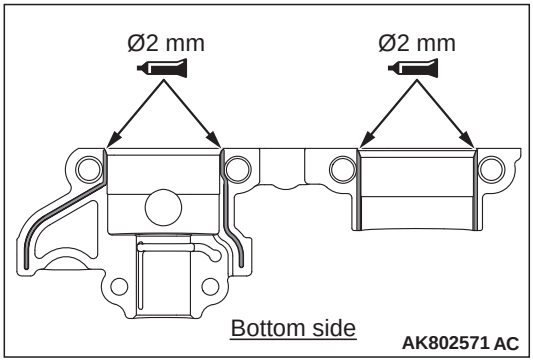

1. Apply the liquid gasket to the rear camshaft bearing cap, as shown in the illustration.

   Specified sealant:
   Three bond 1217G or equivalent

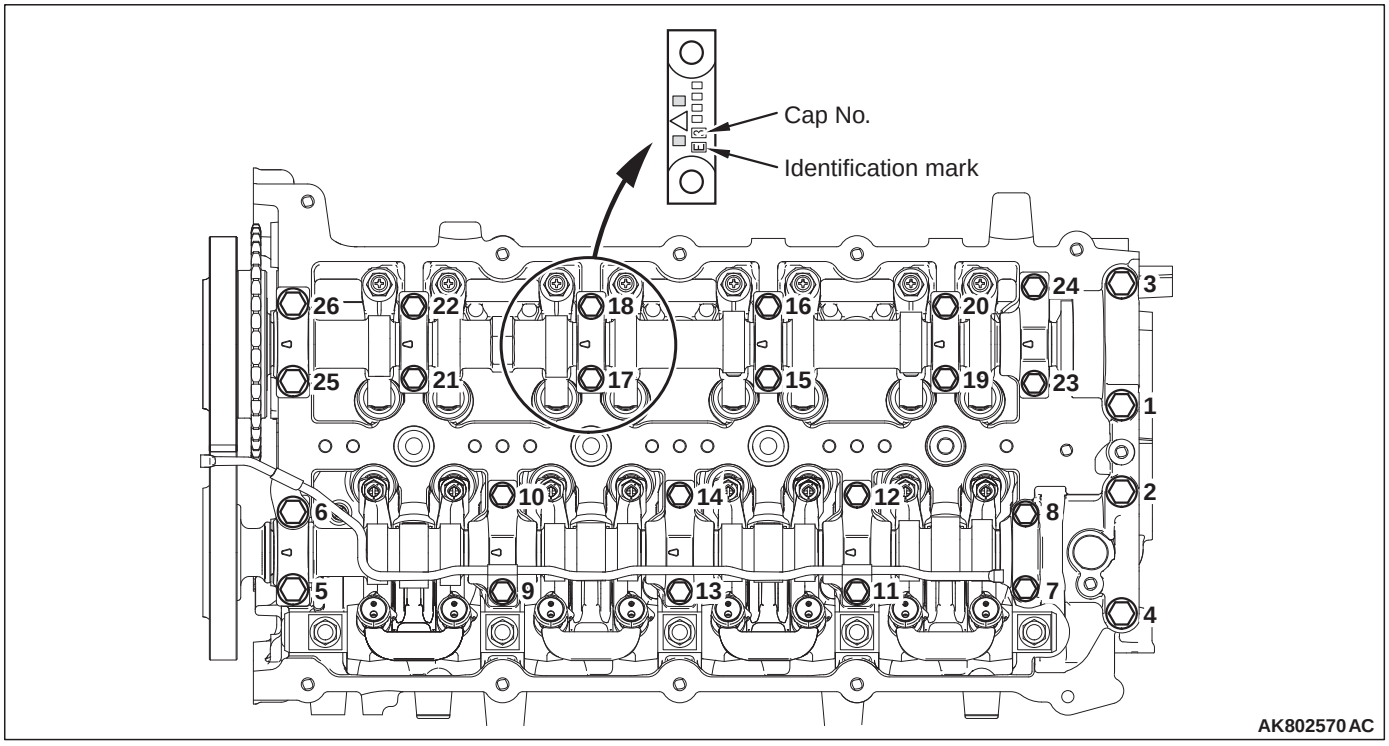

2. Install each camshaft bearing cap to the cylinder head.

NOTE: Check the identification codes regarding the cap No. Check whether it is for the inlet side or the exhaust side.

Identification mark (stamped on each camshaft bearing cap)
I: Inlet side
E: Exhaust side

3. Install a new O-ring to the oil pipe.
4. Install the oil pipe to the camshaft bearing cap.
5. Tighten the camshaft bearing cap bolts to the specified torque in the order shown in the illustration.

Specified torque
M6: 11 ± 1 N·m
M8: 20 ± 1 N·m

>>D<< BALANCER UNIT / BALANCER UNIT BOLT INSTALLATION

1. Apply the appropriate and minimum amount of engine oil to the balance unit bolt thread portion and the lower portion of the flange.

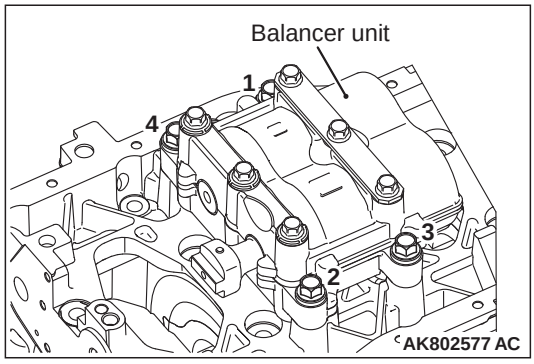

2. Install the balancer unit to the lower crankcase and tighten them to the tighten torque of 20 N·m in the order shown in the illustration.

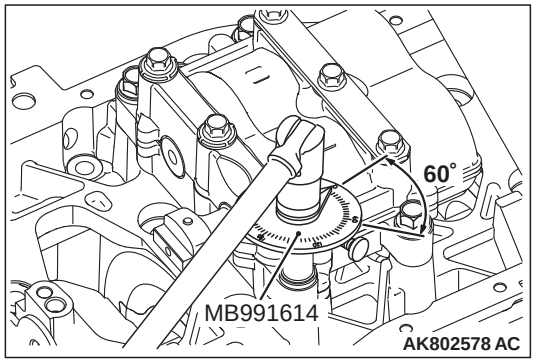

3. Use Special Tool Angle Gauge (MB991614) to tighten them an additional 60°.

>>E<< COUPLING / TRUST PLATE / BALANCER SHAFT DRIVE HOUSING AND GEAR / CRANKSHAFT GEAR INSTALLATION

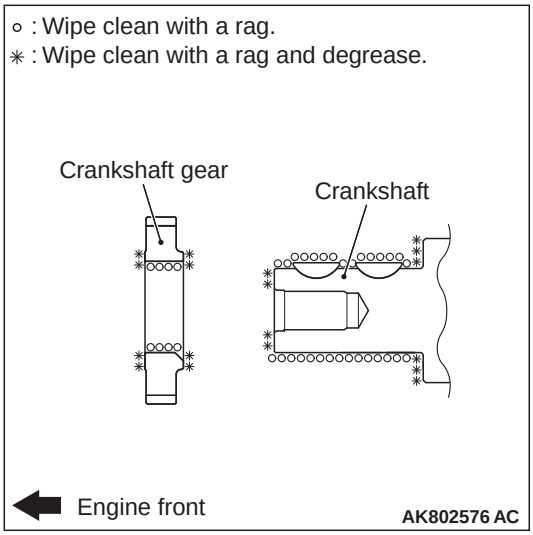

1. Use a rag to wipe off the dirt on the crankshaft gear and the crankshaft. Remove the grease on the portion shown in the illustration.

   NOTE: Remove the grease in order that adhered oil cannot decrease the wear coefficient of the pressed area.

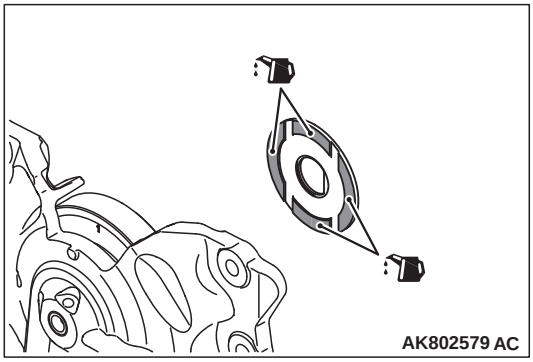

2. Apply the appropriate and minimum amount of engine oil to the thrust plate, as shown in the illustration.
3. Install all of these so that the thrust plate face where the engine oil is applied can face toward the balancer shaft drive housing and gear.

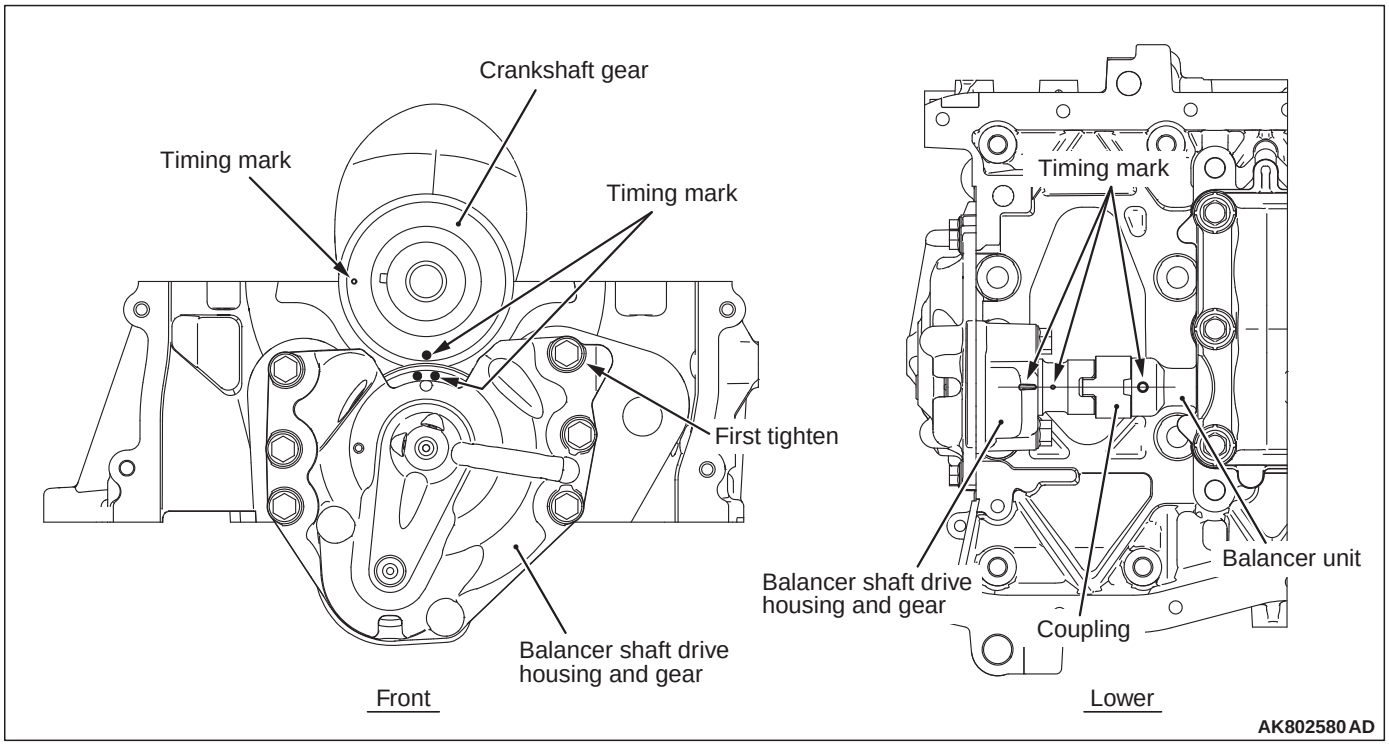

4. Install all of these aligning all the timing marks.
5. When tightening the balancer shaft drive housing and the gear, tighten the bolt shown in the illustration first.

>>F<< CRANKSHAFT SPROCKET INSTALLATION

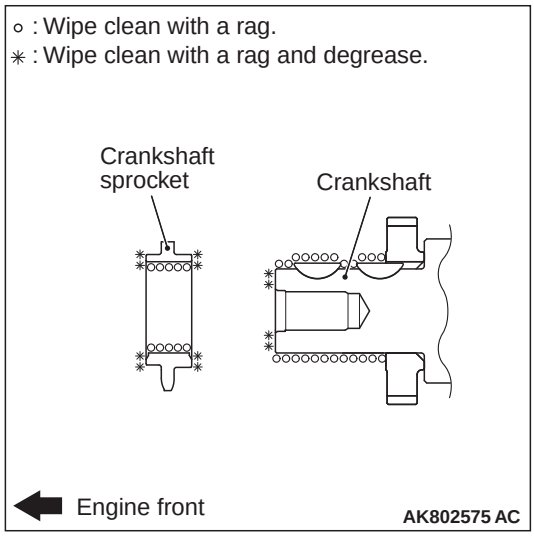

Use a rag to wipe off the dirt on the crankshaft sprocket and the crankshaft. Remove the grease on the portion shown in the illustration.

NOTE: Remove the grease in order that adhered oil cannot decrease the wear coefficient of the pressed area.

>>G<< CRANKSHAFT KEY / TIMING CHAIN GUIDE / TENSIONER LEVER / TIMING CHAIN TENSIONER INSTALLATION

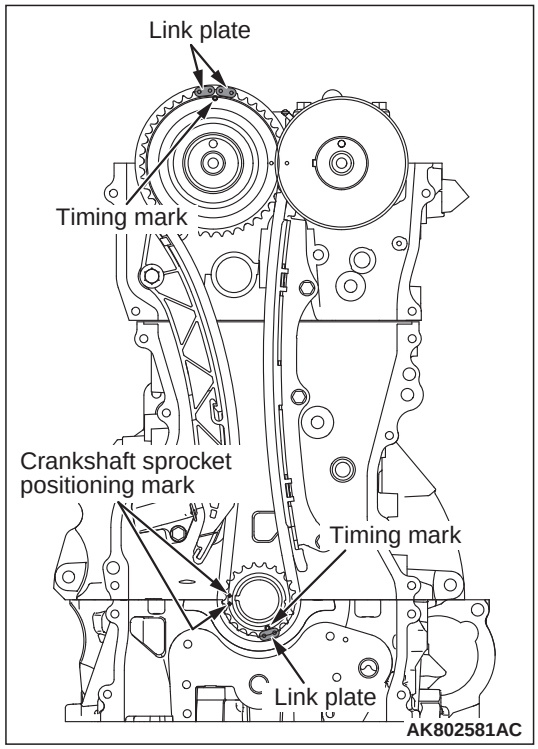

1. Install all of these so that the centres of two location marks of the crankshaft sprocket can align with the border line between the cylinder block and the lower crank case.
2. Install the crankshaft key.

NOTE: This position becomes the No.1 cylinder compression top dead centre finally.

3. Align the timing mark of the camshaft and the timing mark of the crankshaft sprocket with the link plate of the timing chain to install the timing chain.
4. Tighten the chain guide to the specified torque of 11 ± 3 N·m.
5. Tighten the tensioner lever to the specified torque of 24 ± 3 N·m. After the installation, check that the turn direction has flexibility at the bolt support point.
6. Tighten the timing chain tensioner to the specified torque of 11 ± 3 N·m.

⚠ WARNING

If the timing chain tensioner set pin (fixed wire) suddenly comes off the timing chain tensioner, it is very dangerous because the plunger jumps out.

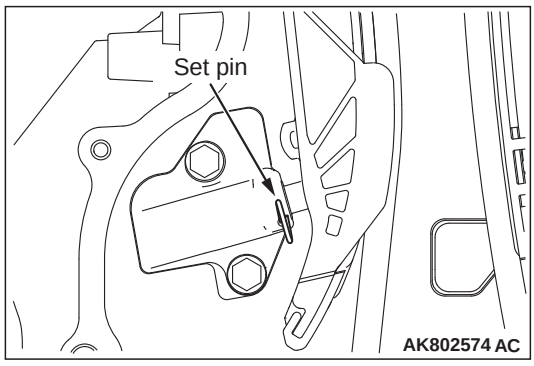

7. After that, pull out the set pin (fixed wire) to give tension to the timing chain.

   Check that the timing chain tensioner plunger fits securely into the tensioner lever groove.

   Check that the timing chain link securely engages with the gear without going beyond.

   Check that the timing chain does not deviate from the chain guide and the tensioner lever chain running surface.
8. Check that each timing mark aligns with two link plates of the timing chain.

INSPECTION

M1113038900021

VALVE CLEARANCE ADJUSTMENT

⚠ CAUTION

The crankshaft should always be rotated clockwise.

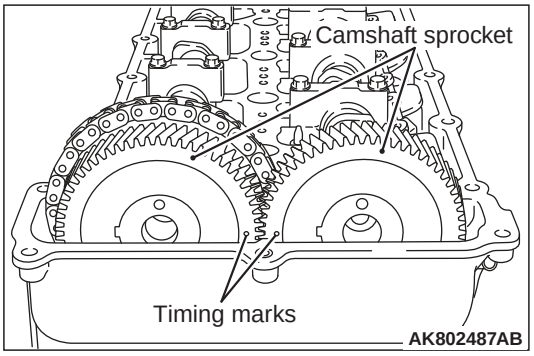

1. Align the camshaft sprocket timing marks and set the No. 1 cylinder at compression stroke top dead centre.

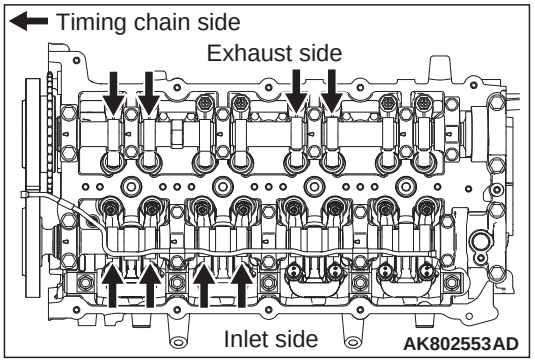

2. For the portions with the arrows shown below, measure and adjust the valve clearances by using the following procedures.

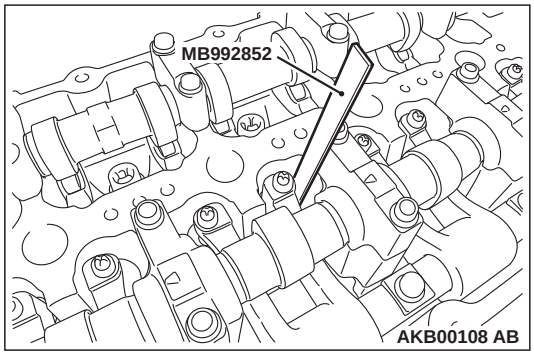

<Inlet side>

1.) Insert the special tool valve adjusting feeling gauge (MB992852) between the valve stem and the adjusting screw.

2). Adjust the clearance between the valve stem and adjusting screw to be within the standard value.

Standard value: 0.14 ± 0.03 mm

⚠ CAUTION

Pay special attention that the tightening torque is not beyond this valve. If the tightening torque is beyond the valve, the valve stem would possibly bend.

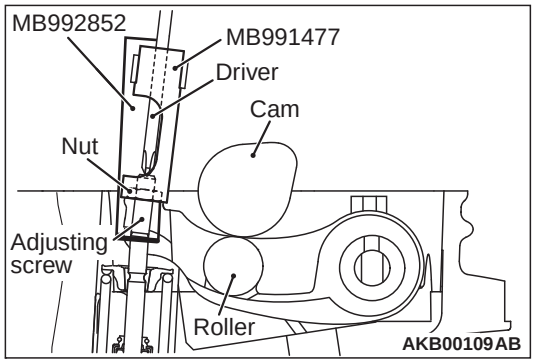

3.)While holding the adjusting screw with a screwdriver to prevent it from turning, tighten the lock nut to the specified torque using the special tool valve adjusting socket (MB991477).

Tightening torque: 9 ± 1 N·m

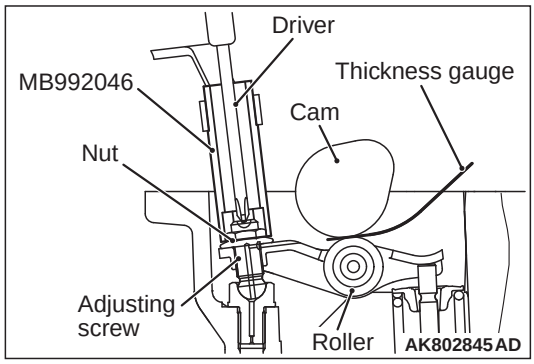

<Exhaust side>

1.)Using a thickness gauge, adjust the clearance between the cam and the roller.

Standard value: 0.16 ± 0.03 mm

⚠ CAUTION

Pay special attention that the tightening torque is not beyond this valve. If the tightening torque is beyond the valve, the valve stem would possibly bend.

2.)While holding the adjusting screw with a screwdriver to prevent it from turning, tighten the lock nut to the specified torque using the special tool(MB992046), valve adjusting socket.

Tightening torque: 9.8 ± 1 N·m

3. Turn the crankshaft 360° clockwise to bring No. 4 cylinder to the compression stroke top dead centre position.

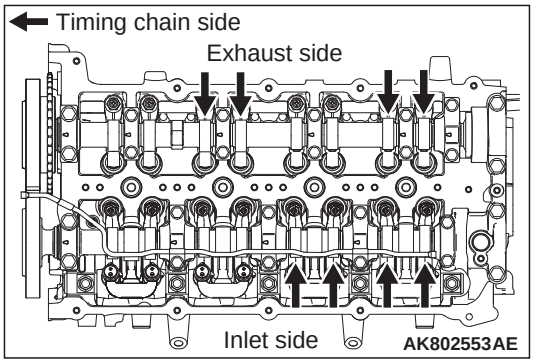

4. For the portions with the arrows shown below, measure and adjust the valve clearances by using the same procedures as ones in the Step 2.

CAMSHAFT INSPECTION

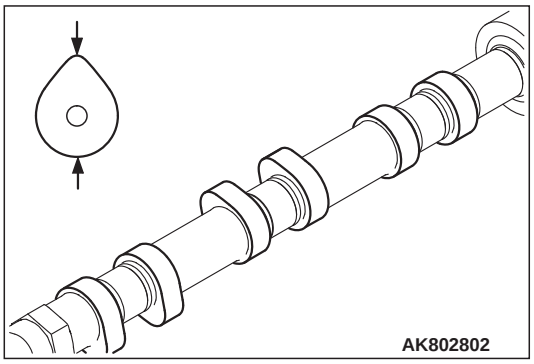

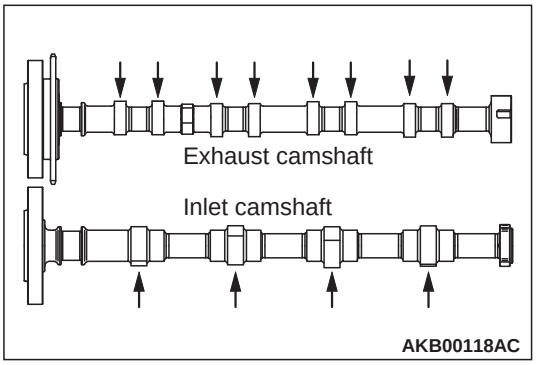

Measure the cam height (cam long diameter). If it goes beyond the limit value, replace the camshaft.

Standard value
Inlet: 36.414 mm
Exhaust: 36.669 mm

Limit
Inlet: 35.914 mm
Exhaust: 36.169 mm

CAMSHAFT

REMOVAL AND INSTALLATION

M1113026900961

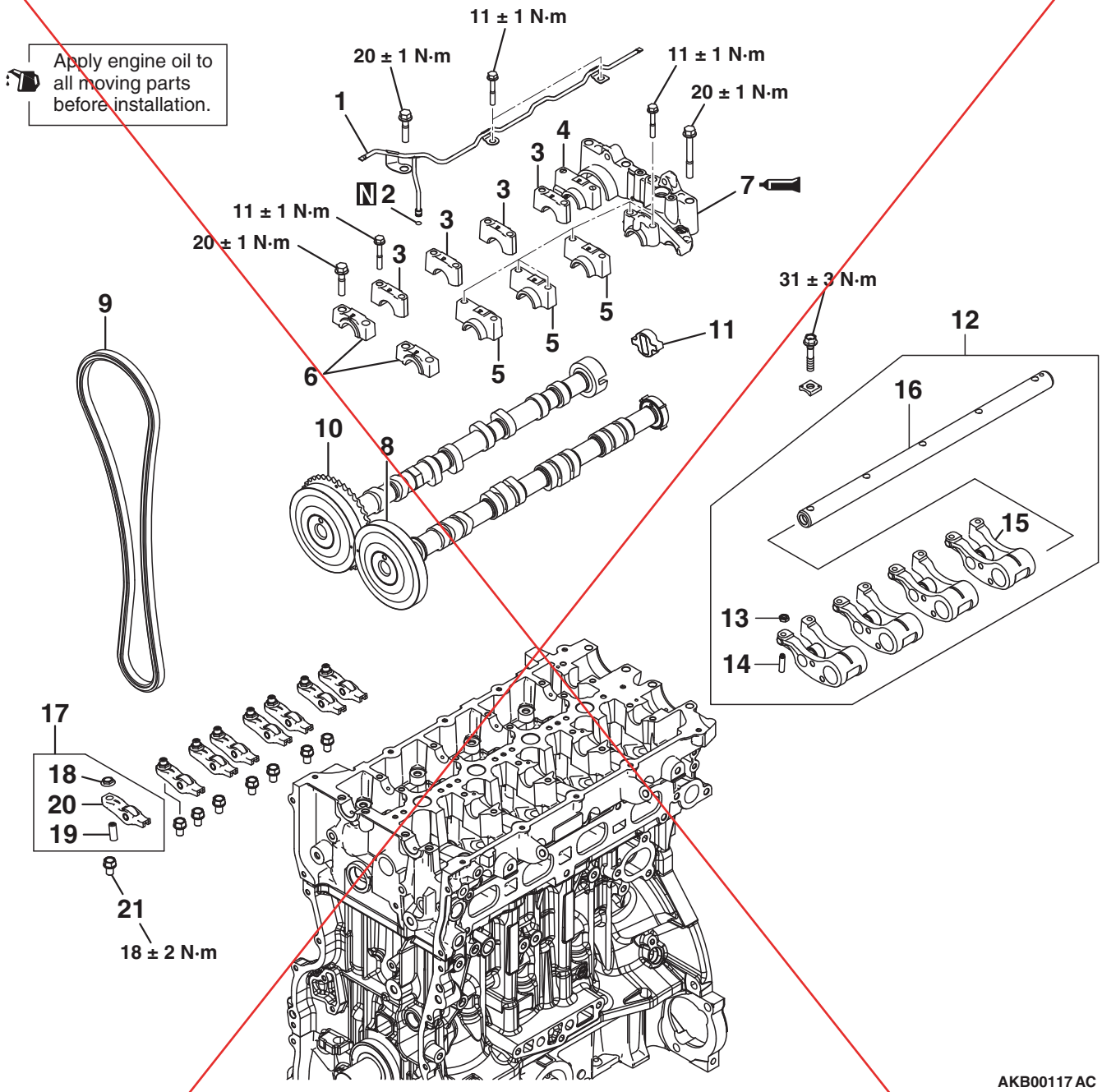

AKB00117 AC

Removal steps

1. Inlet oil pipe
2. O-ring

<<A>> >>C<< 3. Right A camshaft bearing cap
<<A>> >>C<< 4. Right B camshaft bearing cap
<<A>> >>C<< 5. Left camshaft bearing cap
<<A>> >>C<< 6. Front camshaft bearing cap
<<A>> >>C<< 7. Rear camshaft bearing cap
>>B<< 8. Inlet camshaft
>>B<< 9. Timing chain
>>B<< 10. Exhaust camshaft
>>A<< 11. Coupling

<<B>>

Removal steps (Continued)

12. Rocker arm and shaft assembly
13. Nut
14. Adjusting screw
15. Inlet rocker arm
16. Inlet rocker shaft
17. Exhaust rocker arm assembly
18. Nut
19. Adjusting screw
20. Rocker arm
21. Pivot bolt

<Deleted>

REMOVAL SERVICE POINTS

<<A>> RIGHT "B" CAMSHAFT / RIGHT "A" CAMSHAFT BEARING CAP / LEFT CAMSHAFT BEARING CAP / FRONT CAMSHAFT BEARING CAP / REAR CAMSHAFT BEARING CAP REMOVAL

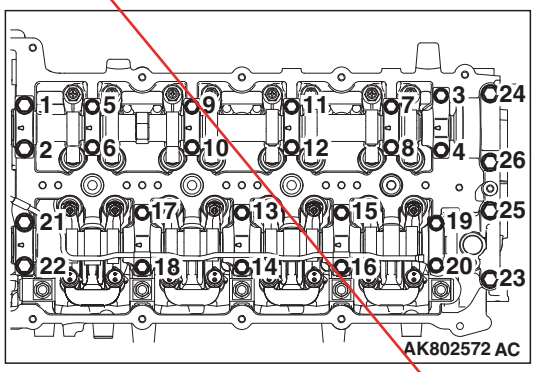

⚠ CAUTION

Loosing the installation bolts for the camshaft bearing cap at the same time causes the valve spring force, which makes the installation bolts jump out, resulting in the damaged threads. Gradually loosen them four or five times, not in one time.

Remove the installation bolts of each camshaft bearing cap in the order shown in the illustration.

<<B>> ROCKER ARM AND SHAFT ASSEMBLY

⚠ CAUTION

Never overhaul the rocker arm and the rocker shaft assembly.

INSTALLATION SERVICE POINTS

>>A<< COUPLING INSTALLATION

Apply oil to the entire coupling to install the coupling to the slit portion of the exhaust camshaft rear end.

NOTE: Do not install it wrongly. Do not drop it.

>>B<< INLET CAMSHAFT / TIMING CHAIN / EXHAUST CAMSHAFT INSTALLATION

1. Install the exhaust camshaft.

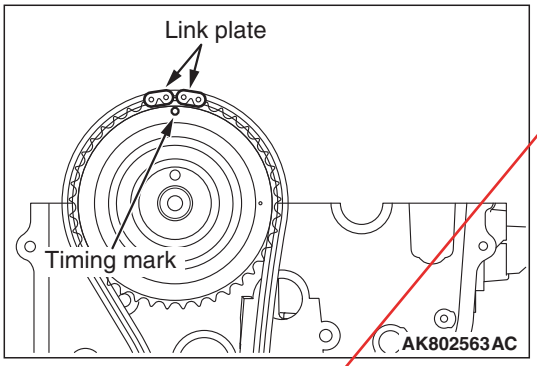

2. Align the timing chain link plate with the timing mark of the exhaust camshaft to loop the timing chain.

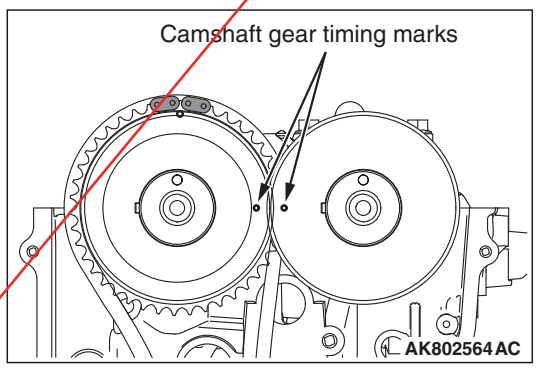

3. Install the inlet camshaft, Align the timing marks on each camshaft gear to install them.

>>C<< RIGHT "B" CAMSHAFT / RIGHT "A" CAMSHAFT BEARING CAP / LEFT CAMSHAFT BEARING CAP / FRONT CAMSHAFT BEARING CAP / REAR CAMSHAFT BEARING CAP INSTALLATION

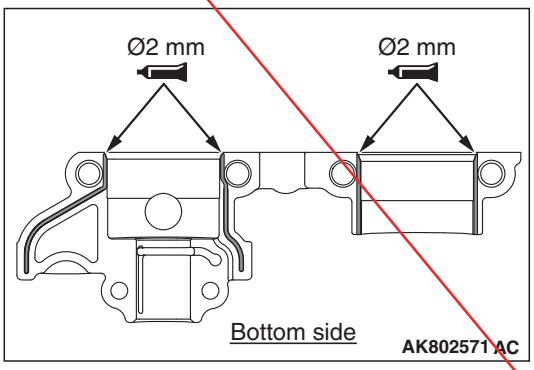

1. Apply the liquid gasket to the rear camshaft bearing cap, as shown in the illustration.

Specified sealant:
Three bond 1217G or equivalent

<Deleted>

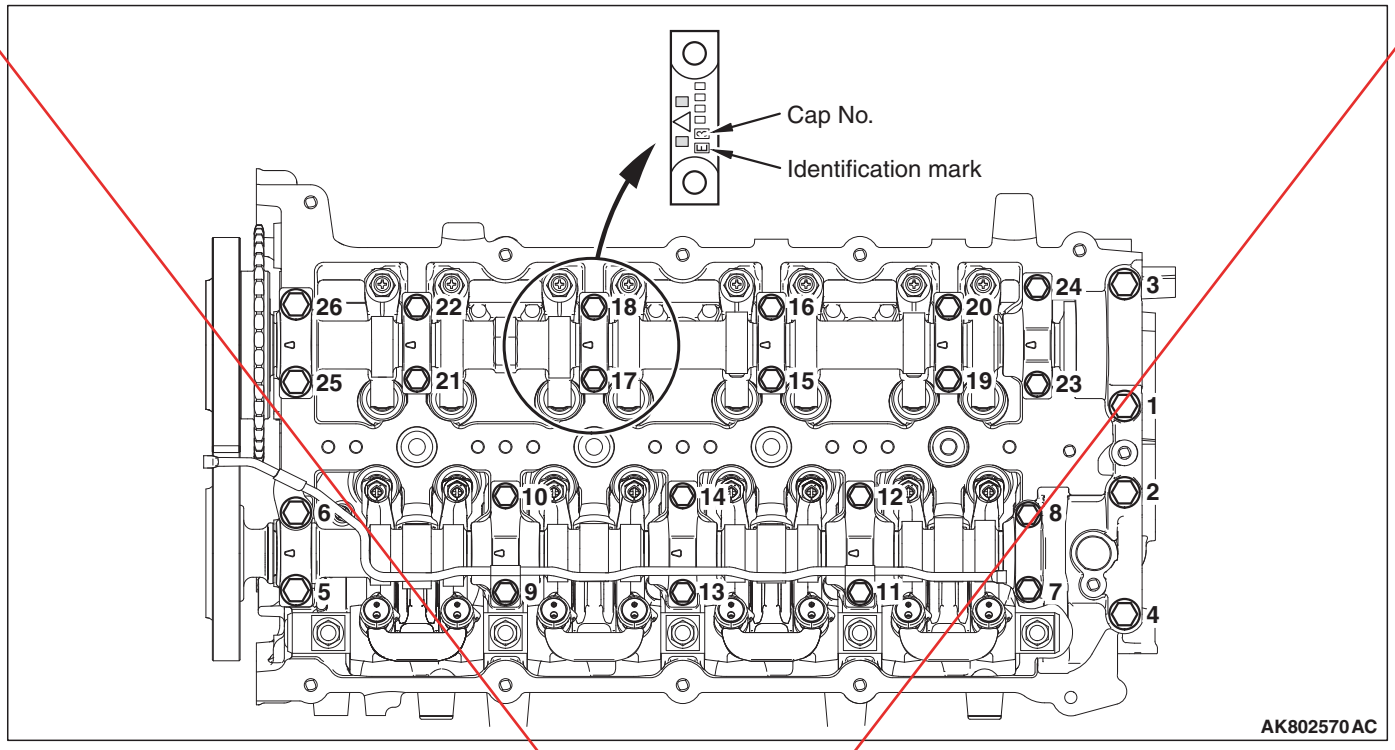

2. Install each camshaft bearing cap to the cylinder head.

   NOTE: Check the identification codes regarding the cap No. Check whether it is for the inlet side or the exhaust side.

   Identification mark (stamped on each camshaft bearing cap)
   I: Inlet side
   E: Exhaust side

3. Install a new O- ring to the oil pipe.
4. Install the oil pipe to the camshaft bearing cap.
5. Tighten the camshaft bearing cap bolts to the specified torque in the order shown in the illustration.

   Specified torque
   M6: 11 ± 1 N·m
   M8: 20 ± 1 N·m

INSPECTION

M1113027000972

CAMSHAFT

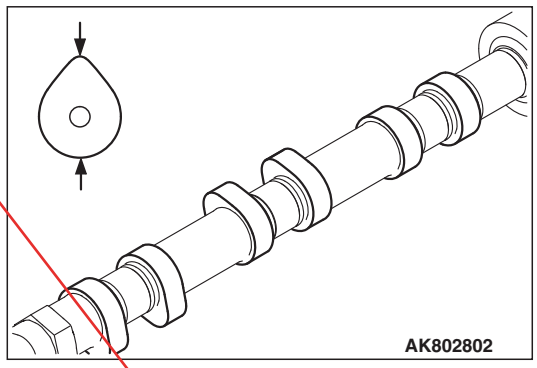

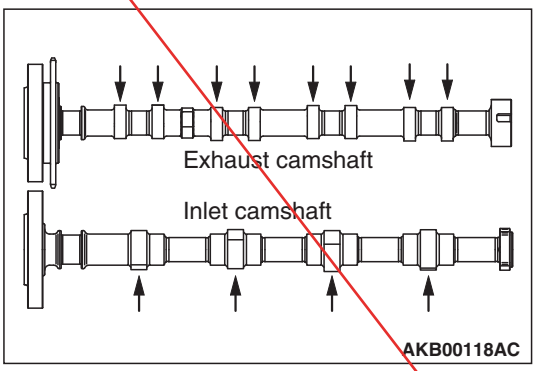

Measure the cam height (cam long diameter). If it goes beyond the limit value, replace the camshaft.

Standard value
Inlet: 36.414 mm
Exhaust: 36.669 mm

Limit
Inlet: 35.914 mm
Exhaust: 36.169 mm

<Correct> Attached sheet 6 (5/10 to 10/10)

Attached sheet 6 (1/10)

<Incorrect>

TIMING CHAIN

REMOVAL AND INSTALLATION

M1113026601059

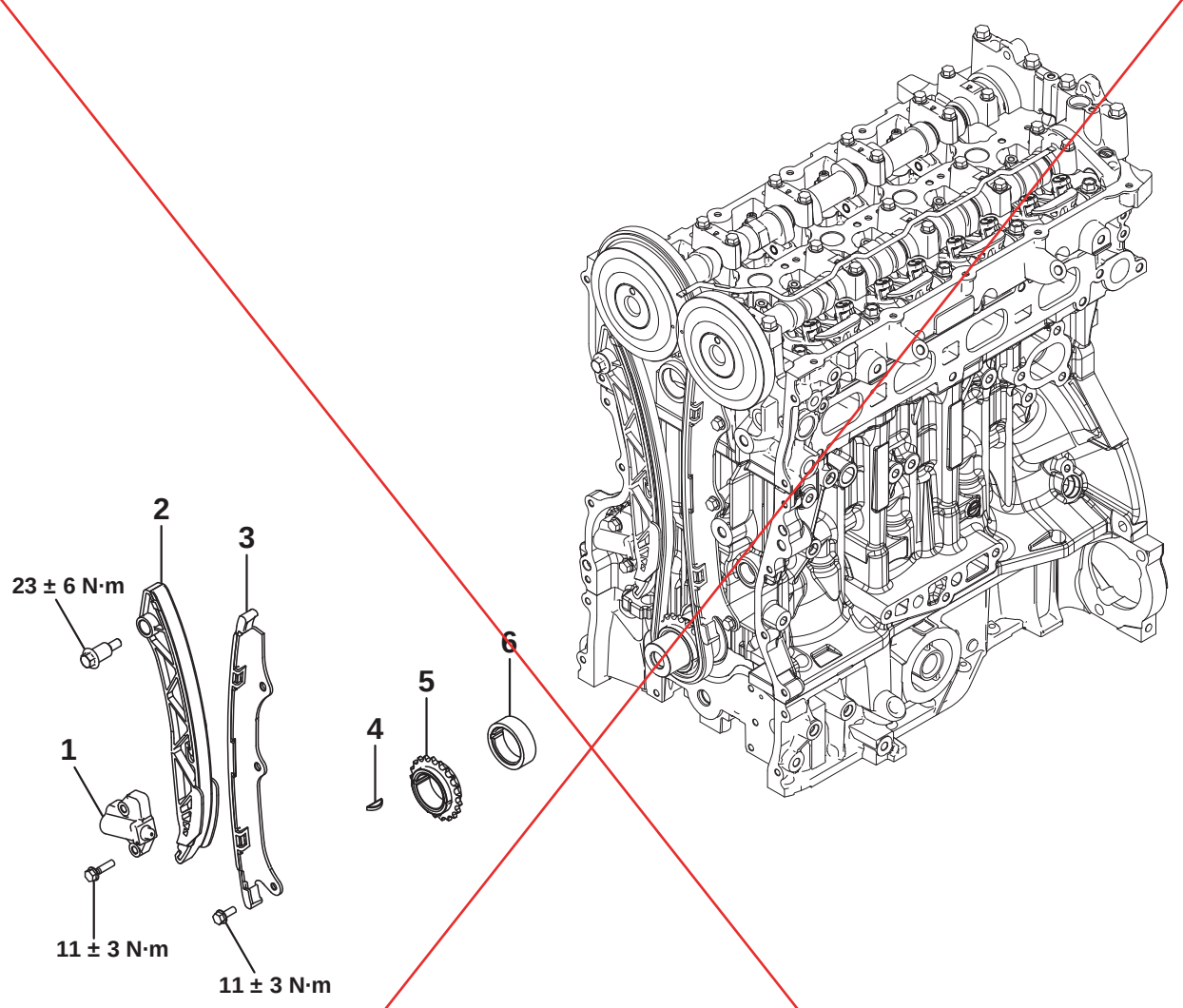

AK900855 AB

Removal steps

<<A>> >>B<< 1. Timing chain tensioner
>>B<< 2. Tensioner lever
>>B<< 3. Timing chain guide
>>B<< 4. Crankshaft key
>>A<< 5. Crankshaft sprocket
>>A<< 6. Crankshaft spacer

REMOVAL SERVICE POINT

<<A>> TIMING CHAIN TENSIONER REMOVAL

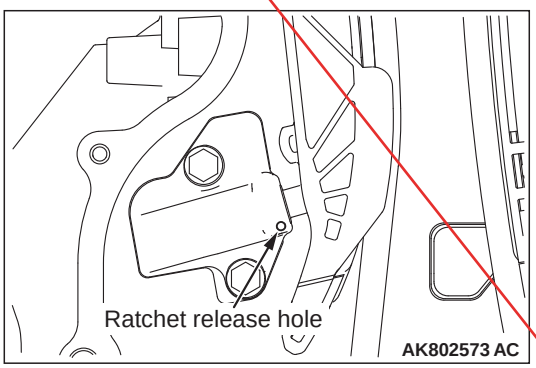

1. Push the tensioner lever by hand and push in the plunger of the timing chain tensioner until it hits the bottom. Then, insert a hard wire (piano wire or the like) of ϕ1.0 or hexagonal bar wrench (1.0 mm) into the fixing hole of the plunger.

<Deleted>

⚠ WARNING

If the timing chain tensioner set pin (fixed wire) suddenly comes off the timing chain tensioner, it is very dangerous because the plunger jumps out.

2. Remove the timing chain tensioner.

NOTE: At that time, the timing chain cannot be removed.

INSTALLATION SERVICE POINTS

>>A<< CRANKSHAFT SPROCKET / CRANKSHAFT SPACER INSTALLATION

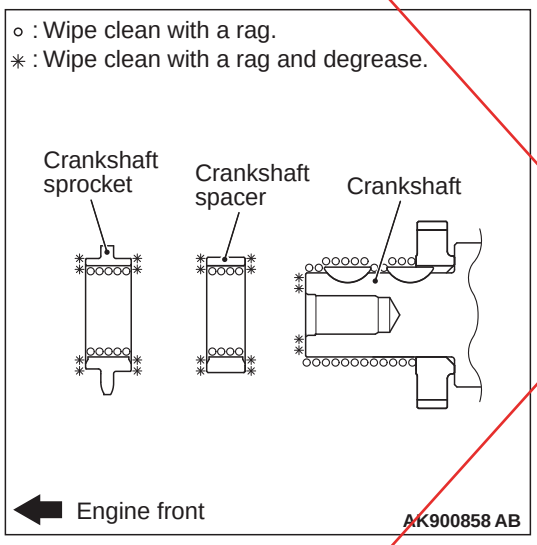

Use a rag to wipe off the dirt on the crankshaft sprocket, crankshaft spacer and the crankshaft. Remove the grease on the portion shown in the illustration.

NOTE: Remove the grease in order that adhered oil cannot decrease the wear coefficient of the pressed area.

>>B<< CRANKSHAFT KEY / TIMING CHAIN / TIMING CHAIN GUIDE / TENSIONER LEVER / TIMING CHAIN TENSIONER INSTALLATION

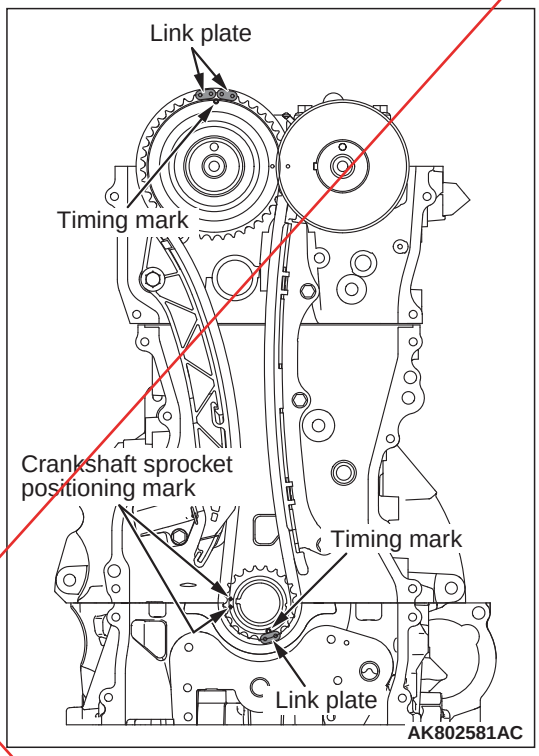

1. Install all of these so that the centers of two location marks of the crankshaft sprocket can align with the border line between the cylinder block and the lower crank case.
2. Install the crankshaft key.

   NOTE: This position becomes the No.1 cylinder compression top dead center finally.
3. Align the timing mark of the camshaft and the timing mark of the crankshaft sprocket with the link plate of the timing chain to install the timing chain.
4. Tighten the chain guide to the specified torque of 11 ± 3 N·m.
5. Tighten the tensioner lever to the specified torque of 24 ± 3 N·m. After the installation, check that the turn direction has flexibility at the bolt support point.
6. Tighten the timing chain tensioner to the specified torque of 11 ± 3 N·m.

<Deleted>

⚠ WARNING

If the timing chain tensioner set pin (fixed wire) suddenly comes off the timing chain tensioner, it is very dangerous because the plunger jumps out.

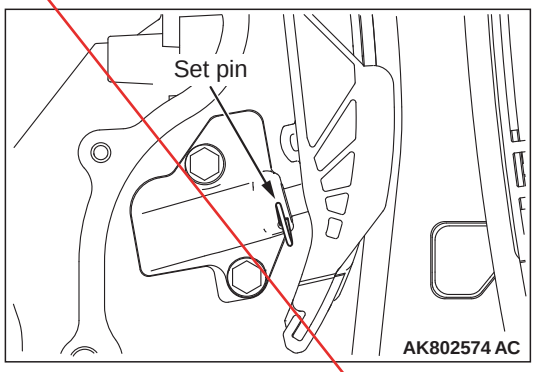

7. After that, pull out the set pin (fixed wire) to give tension to the timing chain.

   Check that the timing chain tensioner plunger fits securely into the tensioner lever groove.

   Check that the timing chain link securely engages with the gear without going beyond.

   Check that the timing chain does not deviate from the chain guide and the tensioner lever chain running surface.
8. Check that each timing mark aligns with two link plates of the timing chain.

INSPECTION

M1113026701023

VALVE CLEARANCE ADJUSTMENT

Measure the valve clearance as illustrated.

⚠ CAUTION

The crankshaft should always be rotated clockwise.

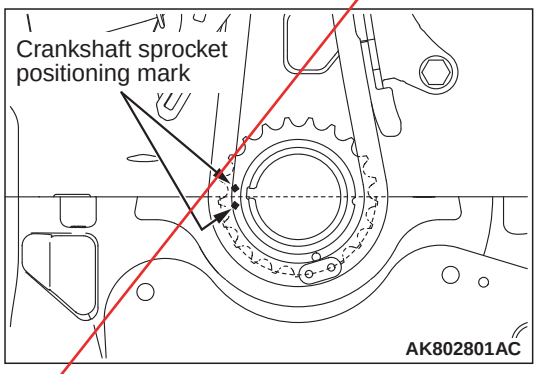

1. Rotate the crankshaft clockwise. Align the border line, which is between the cylinder block and the lower crankcase, with the center that is between two crankshaft sprocket locating marks.(Set the No. 1 cylinder to TDC on the compression stroke.)

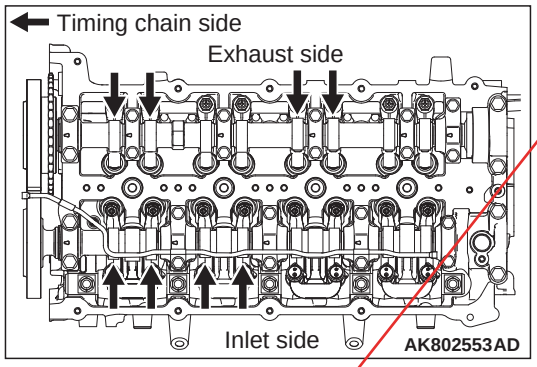

2. Now, the valve clearance (shown with an arrow) can be measured.

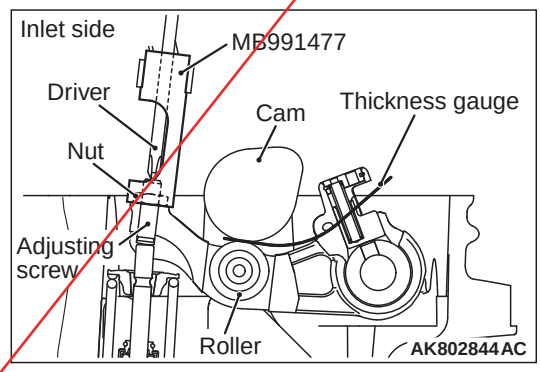

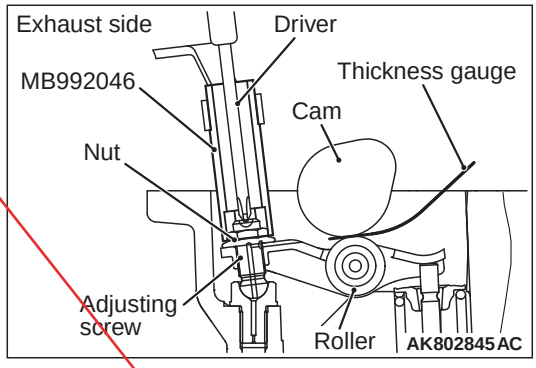

3. Using a thickness gauge, measure the clearance between the cam and the roller.

   Standard value
   Inlet side: 0.08 ± 0.03 mm
   Exhaust side: 0.16 ± 0.03 mm
4. While holding the adjusting screw with a driver to prevent it from turning, tighten the lock nut to the specified torque using the special tool, valve adjusting socket.

   Special tool (valve adjusting socket)
   Inlet side: MB991477
   Exhaust side: MB992046

   Specified torque
   Inlet side: 9.0 ± 1.0 N·m
   Exhaust side: 9.8 ± 1.0 N·m
5. Turn the crankshaft 360° clockwise to bring No. 4 cylinder to the top dead centre position.

<Deleted>

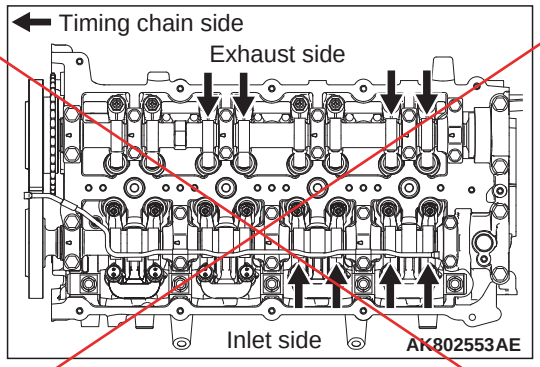

6. Adjust the valve clearance at points shown in the illustration.

TIMING CHAIN AND CAMSHAFT

REMOVAL AND INSTALLATION

M1113038300030

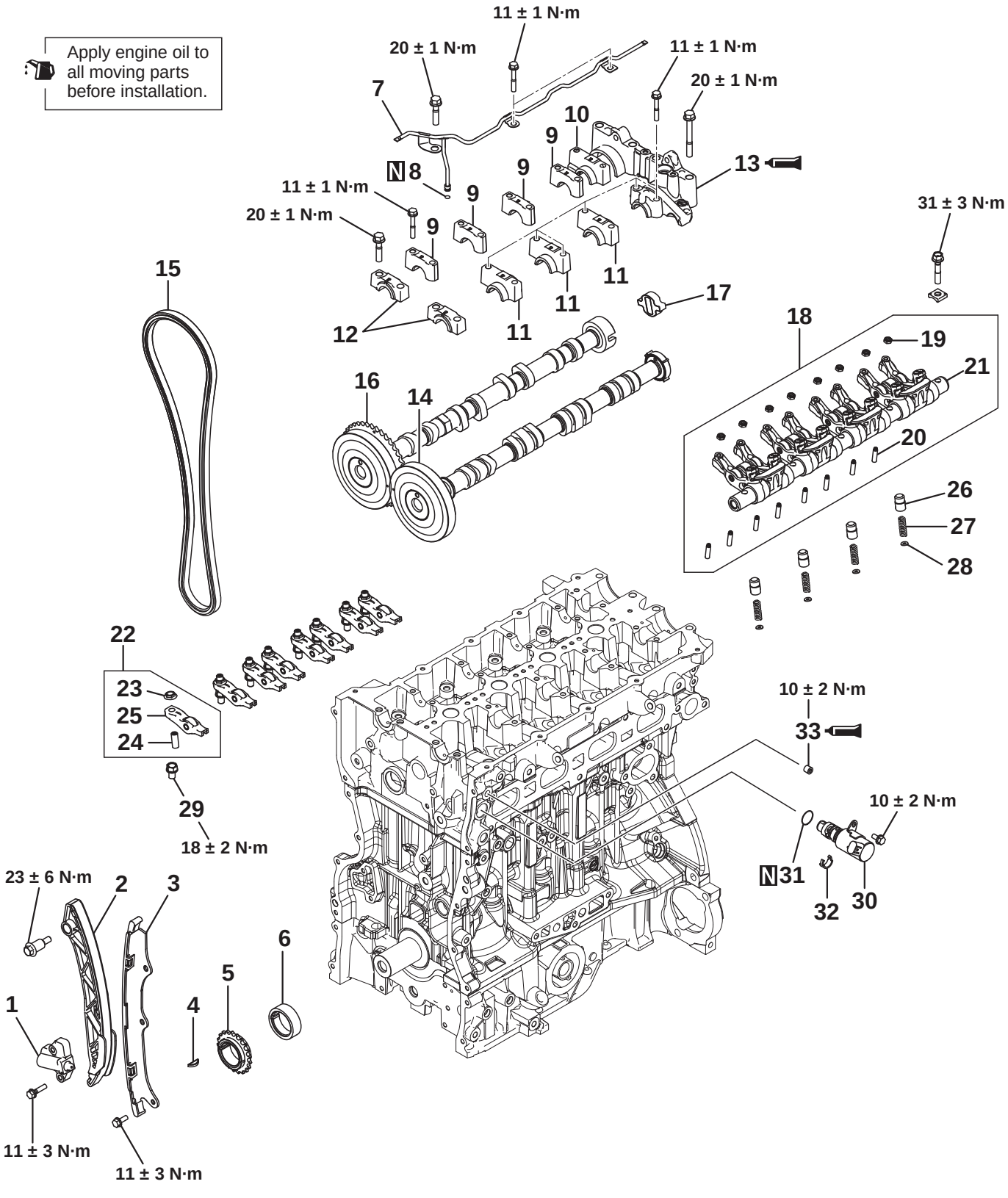

Removal steps

<<A>> >>G<< 1. Timing chain tensioner
>>G<< 2. Tensioner lever
>>G<< 3. Timing chain guide
>>G<< 4. Crankshaft key
>>F<< 5. Crankshaft sprocket
>>F<< 6. Crankshaft spacer
7. Inlet oil pipe
8. O-ring
<<B>> >>E<< 9. Right A camshaft bearing cap
<<B>> >>E<< 10. Right B camshaft bearing cap
<<B>> >>E<< 11. Left camshaft bearing cap
<<B>> >>E<< 12. Front camshaft bearing cap
<<B>> >>E<< 13. Rear camshaft bearing cap
>>D<< 14. Inlet camshaft
>>D<< 15. Timing chain
>>D<< 16. Exhaust camshaft
>>C<< 17. Coupling
<<C>> 18. Rocker arm and shaft assembly
19. Nut
20. Adjusting screw
21. Rocker arm and shaft
22. Exhaust rocker arm assembly
23. Nut
24. Adjusting screw
25. Rocker arm
26. Piston (T-lever)
27. Piston spring
28. Piston spring seat
29. Pivot bolt
>>B<< 30. Oil feeder control valve (OCV)
>>B<< 31. O-ring
32. OCV filter
>>A<< 33. Taper plug

REMOVAL SERVICE POINTS

<<A>> TIMING CHAIN TENSIONER REMOVAL

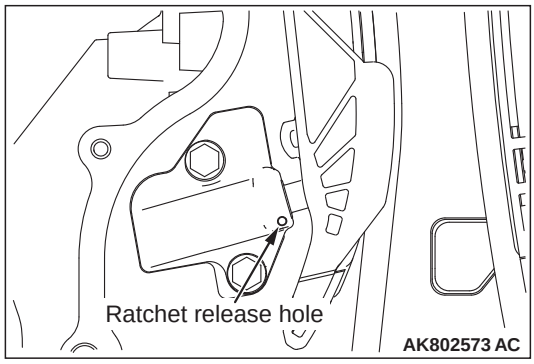

1. Push the tensioner lever by hand and push in the plunger of the timing chain tensioner until it hits the bottom. Then, insert a hard wire (piano wire or the like) of ϕ1.0 or hexagonal bar wrench (1.0 mm) into the fixing hole of the plunger.

⚠ WARNING

If the timing chain tensioner set pin (fixed wire) suddenly comes off the timing chain tensioner, it is very dangerous because the plunger jumps out.

2. Remove the timing chain tensioner.

NOTE: At that time, the timing chain cannot be removed.

<<B>> RIGHT "A" CAMSHAFT BEARING CAP / RIGHT "B" CAMSHAFT BEARING CAP / LEFT CAMSHAFT BEARING CAP / FRONT CAMSHAFT BEARING CAP / REAR CAMSHAFT BEARING CAP REMOVAL

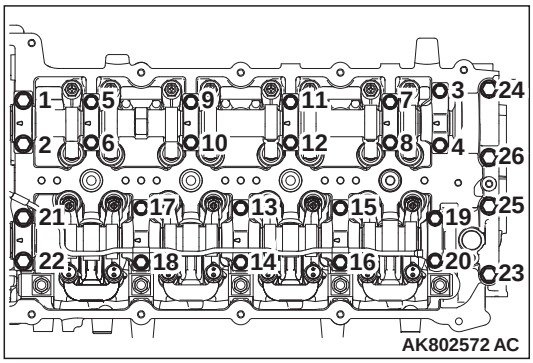

⚠ CAUTION

Loosing the installation bolts for the camshaft bearing cap at the same time causes the valve spring force, which makes the installation bolts jump out, resulting in the damaged threads. Gradually loosen them four or five times, not in one time.

Remove the installation bolts of each camshaft bearing cap in the order shown in the illustration.

<<C>> ROCKER ARM AND SHAFT ASSEMBLY REMOVAL

⚠ CAUTION

Never overhaul the rocker arm and the rocker shaft assembly.

INSTALLATION SERVICE POINTS

>>A<< TAPER PLUG INSTALLATION

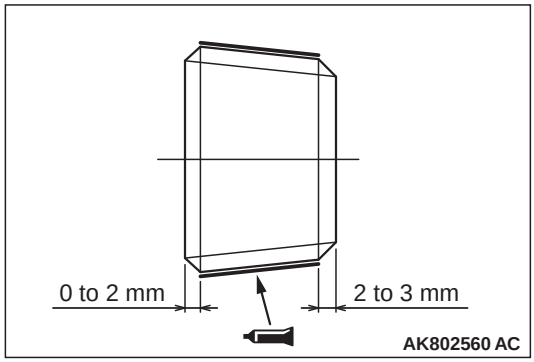

If the taper plug is reused, apply the sealant to the portion shown in the illustration.

Specified sealant:
Three bond 1215, Three bond 1212D or equivalent

>>B<< O-RING / OIL FEEDER CONTROL VALVE (OCV) INSTALLATION

⚠ CAUTION

- **The O-ring must not be reused.**
- **Wind non-adhesive tape (seal tape, etc.) around the notch of the oil passage of the oil feeder control valve before installing the O-ring to prevent damage. Damage to the O-ring causes oil leakage.**

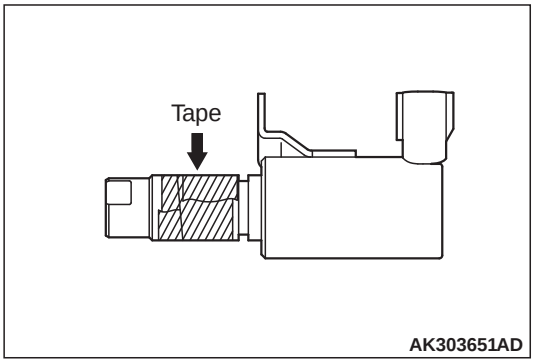

1. Apply a small amount of engine oil to the O-ring of the oil feeder control valve.
2. Install the oil feeder control valve to the cylinder head.
3. Tighten the oil feeder control bolts to the specified torque of 10 ± 2 N·m.

>>C<< COUPLING INSTALLATION

Apply oil to the entire coupling to install the coupling to the slit portion of the exhaust camshaft rear end.

NOTE: Do not install it wrongly. Do not drop it.

>>D<< EXHAUST CAMSHAFT / TIMING CHAIN / INLET CAMSHAFT INSTALLATION

1. Install the exhaust camshaft.

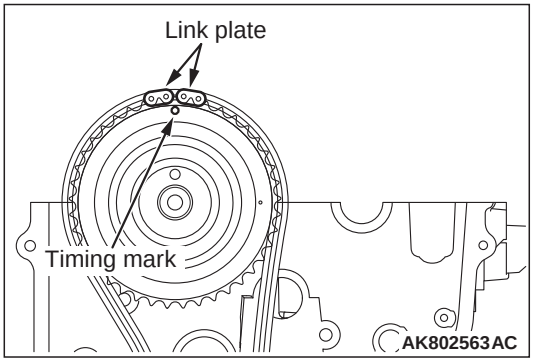

2. Align the timing chain link plate with the timing mark of the exhaust camshaft to loop the timing chain.

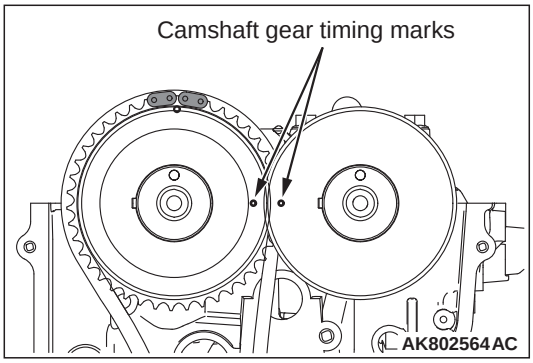

3. Install the inlet camshaft, Align the timing marks on each camshaft gear to install them.

>>E<< REAR CAMSHAFT BEARING CAP / FRONT CAMSHAFT BEARING CAP / LEFT CAMSHAFT BEARING CAP / RIGHT "B" CAMSHAFT BEARING CAP / RIGHT "A" CAMSHAFT BEARING CAP INSTALLATION

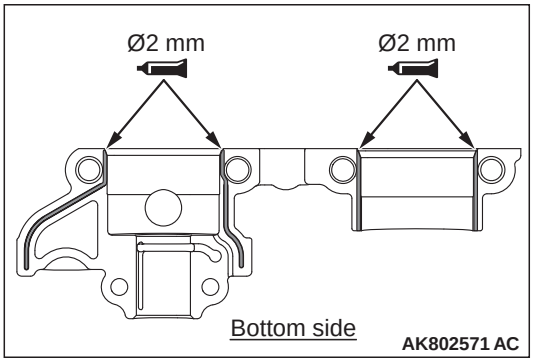

1. Apply the liquid gasket to the rear camshaft bearing cap, as shown in the illustration.

Specified sealant:
Three bond 1217G or equivalent

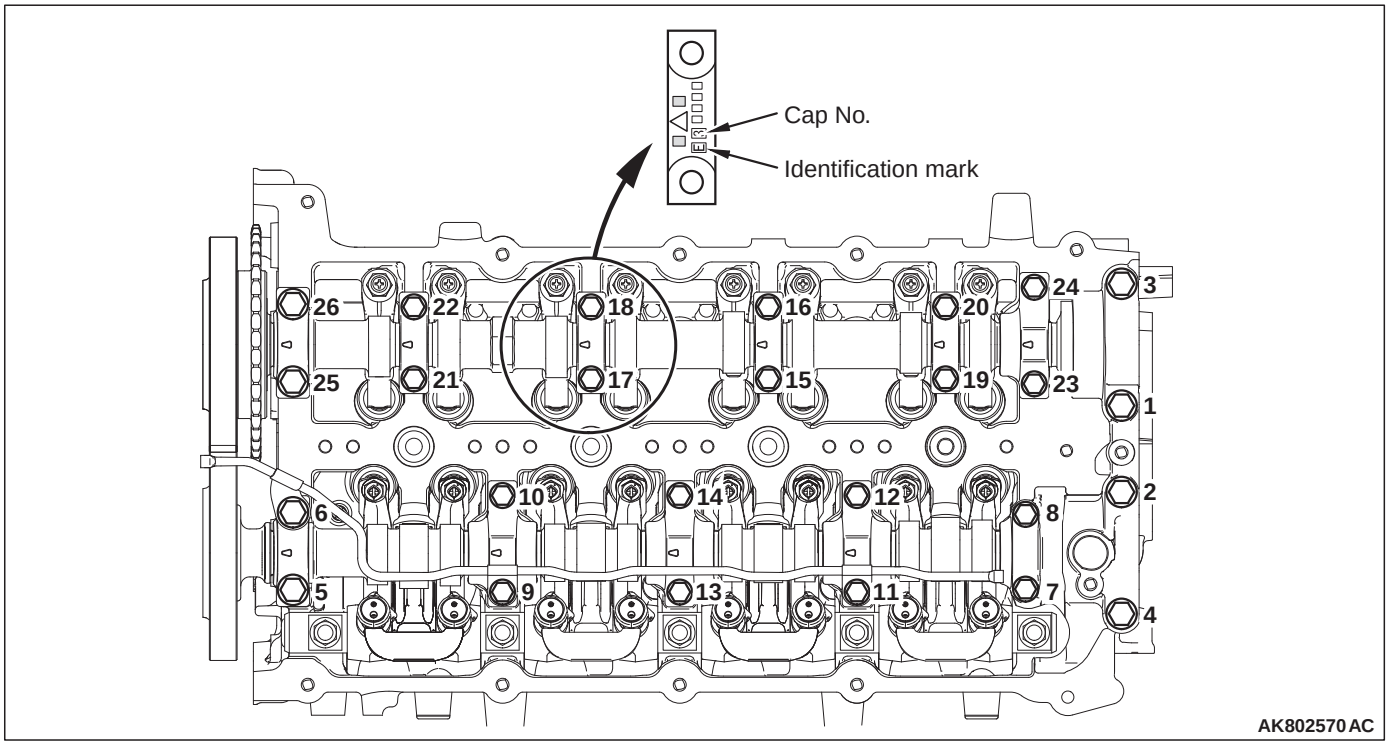

2. Install each camshaft bearing cap to the cylinder head.

   NOTE: Check the identification codes regarding the cap No. Check whether it is for the inlet side or the exhaust side.

   Identification mark (stamped on each camshaft bearing cap)
   I: Inlet side
   E: Exhaust side

3. Install a new O-ring to the oil pipe.
4. Install the oil pipe to the camshaft bearing cap.
5. Tighten the camshaft bearing cap bolts to the specified torque in the order shown in the illustration.

   Specified torque
   M6: 11 ± 1 N·m
   M8: 20 ± 1 N·m

>>F<< CRANKSHAFT SPACER / CRANKSHAFT SPROCKET INSTALLATION

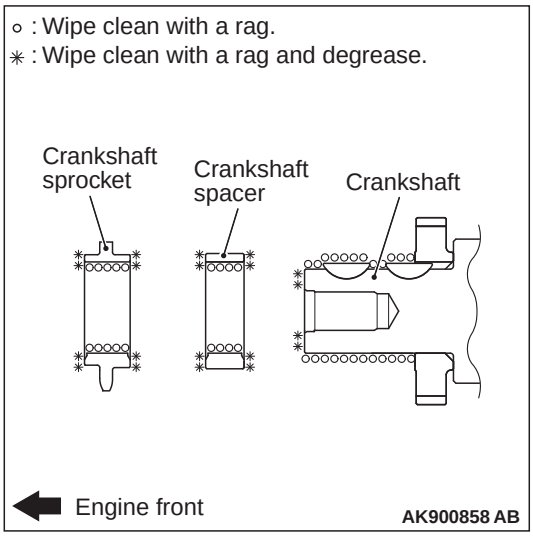

Use a rag to wipe off the dirt on the crankshaft sprocket, crankshaft spacer and the crankshaft. Remove the grease on the portion shown in the illustration.

NOTE: Remove the grease in order that adhered oil cannot decrease the wear coefficient of the pressed area.

>>G<< CRANKSHAFT KEY / TIMING CHAIN GUIDE / TENSIONER LEVER / TIMING CHAIN TENSIONER INSTALLATION

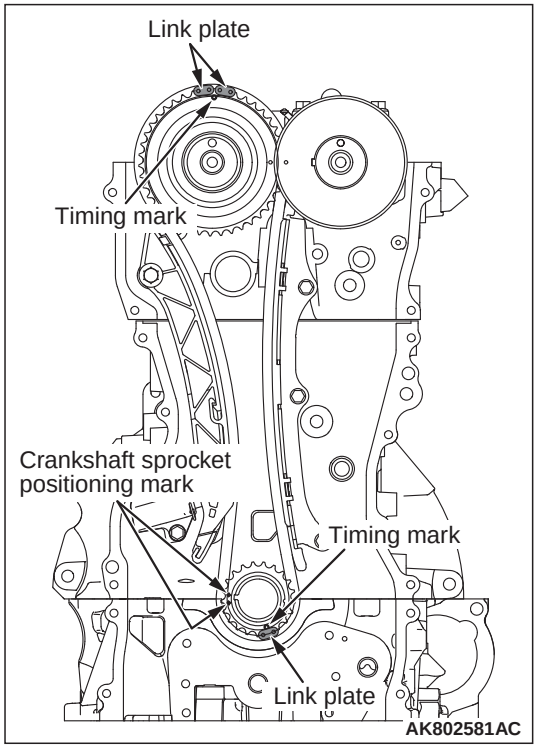

1. Install all of these so that the centres of two location marks of the crankshaft sprocket can align with the border line between the cylinder block and the lower crank case.
2. Install the crankshaft key.

   NOTE: This position becomes the No.1 cylinder compression top dead centre finally.
3. Align the timing mark of the camshaft and the timing mark of the crankshaft sprocket with the link plate of the timing chain to install the timing chain.
4. Tighten the chain guide to the specified torque of 11 ± 3 N·m.
5. Tighten the tensioner lever to the specified torque of 24 ± 3 N·m. After the installation, check that the turn direction has flexibility at the bolt support point.
6. Tighten the timing chain tensioner to the specified torque of 11 ± 3 N·m.

⚠ *WARNING*

If the timing chain tensioner set pin (fixed wire) suddenly comes off the timing chain tensioner, it is very dangerous because the plunger jumps out.

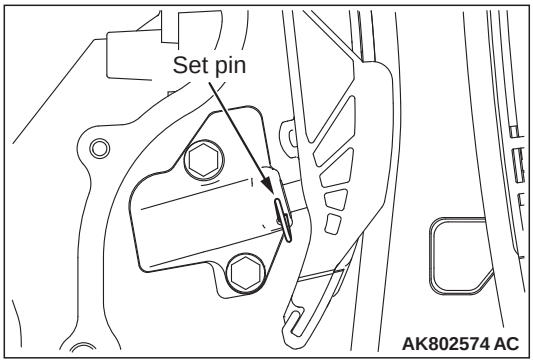

7. After that, pull out the set pin (fixed wire) to give tension to the timing chain.

   Check that the timing chain tensioner plunger fits securely into the tensioner lever groove.

   Check that the timing chain link securely engages with the gear without going beyond.

   Check that the timing chain does not deviate from the chain guide and the tensioner lever chain running surface.
8. Check that each timing mark aligns with two link plates of the timing chain.

INSPECTION

M1113038900032

VALVE CLEARANCE ADJUSTMENT

Measure the valve clearance as illustrated.

⚠ CAUTION

The crankshaft should always be rotated clockwise.

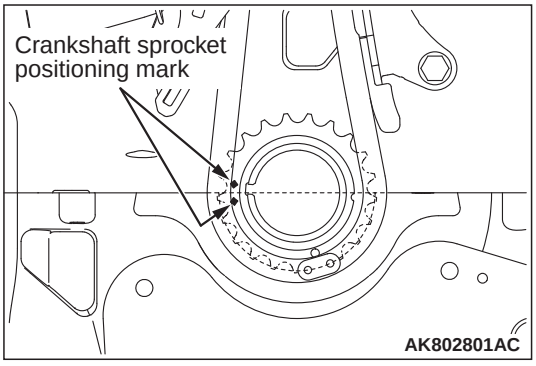

1. Rotate the crankshaft clockwise. Align the border line, which is between the cylinder block and the lower crankcase, with the center that is between two crankshaft sprocket locating marks.(Set the No. 1 cylinder to TDC on the compression stroke.)

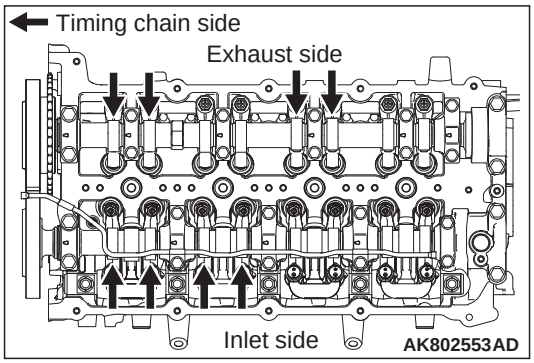

2. Now, the valve clearance (shown with an arrow) can be measured.

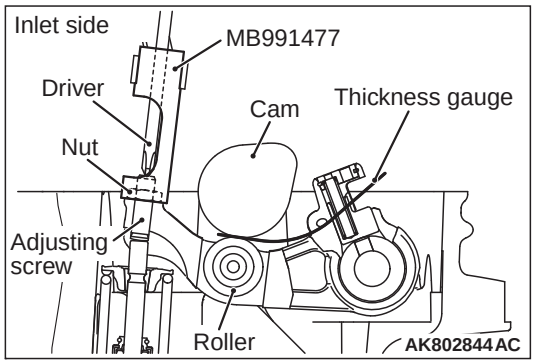

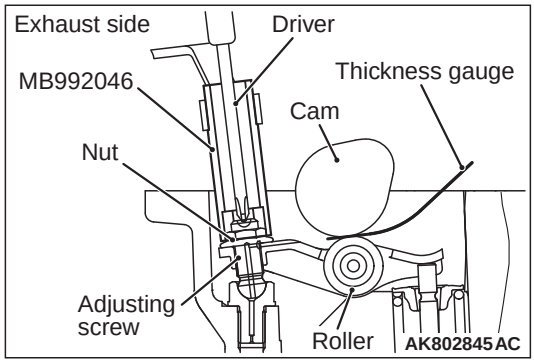

3. Using a thickness gauge, measure the clearance between the cam and the roller.

Standard value
Inlet side: 0.08 ± 0.03 mm
Exhaust side: 0.16 ± 0.03 mm

4. While holding the adjusting screw with a driver to prevent it from turning, tighten the lock nut to the specified torque using the special tool, valve adjusting socket.

Special tool (valve adjusting socket)
Inlet side: MB991477
Exhaust side: MB992046

Specified torque
Inlet side: 9.0 ± 1.0 N·m
Exhaust side: 9.8 ± 1.0 N·m

5. Turn the crankshaft 360° clockwise to bring No. 4 cylinder to the top dead centre position.

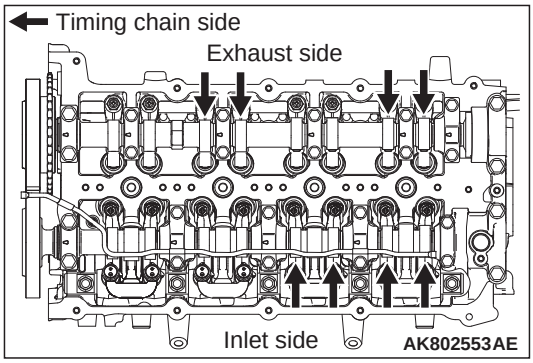

6. Adjust the valve clearance at points shown in the illustration.

CAMSHAFT INSPECTION

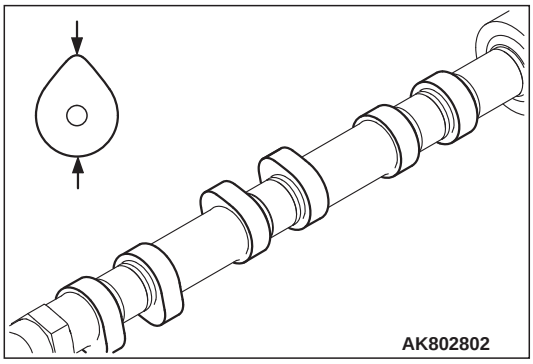

Measure the cam height (cam long diameter). If it goes beyond the limit value, replace the camshaft.

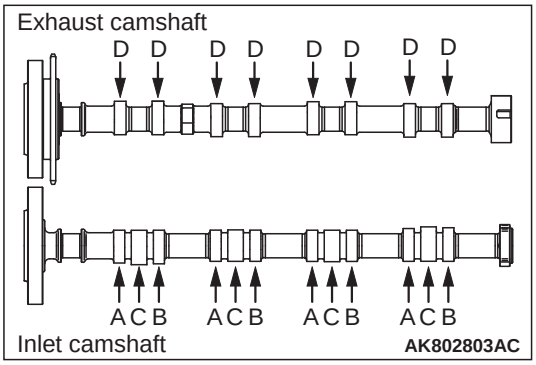

Cam	standard mm	Limit mm
A: Inlet low A	34.685	34.185
B: Inlet low B	36.414	35.914
C: Inlet high	36.790	36.290
D: Exhaust	36.669	36.169

<Correct> Attached sheet 7 (5/13 to 13/13)

Attached sheet 7 (1/13)

<Incorrect>

TIMING CHAIN

REMOVAL AND INSTALLATION

M1113026601189

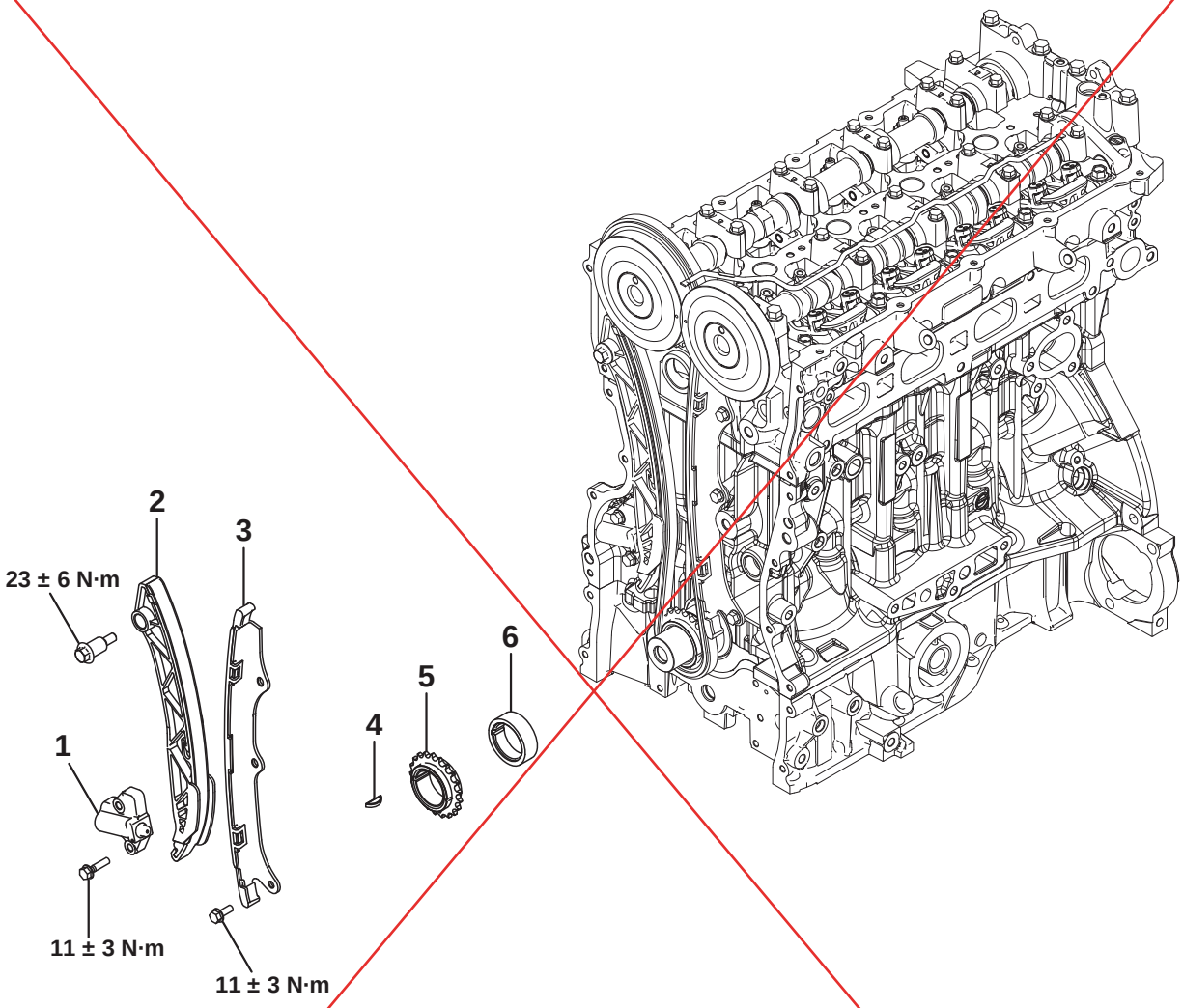

AK900855 AB

Removal steps

<<A>> >>B<< 1. Timing chain tensioner
>>B<< 2. Tensioner lever
>>B<< 3. Timing chain guide
>>B<< 4. Crankshaft key
>>A<< 5. Crankshaft sprocket
>>A<< 6. Crankshaft spacer

REMOVAL SERVICE POINT

<<A>> TIMING CHAIN TENSIONER REMOVAL

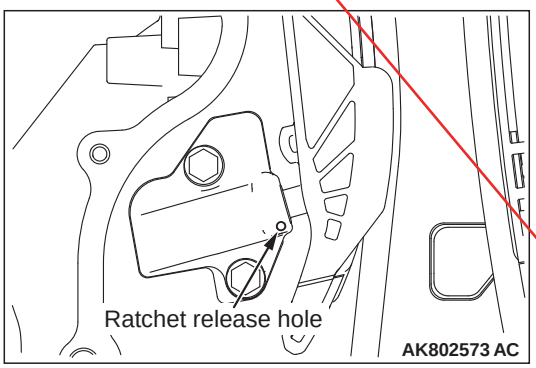

<Deleted>

1. Push the tensioner lever by hand and push in the plunger of the timing chain tensioner until it hits the bottom. Then, insert a hard wire (piano wire or the like) of ϕ1.0 or hexagonal bar wrench (1.0 mm) into the fixing hole of the plunger.

⚠ WARNING

If the timing chain tensioner set pin (fixed wire) suddenly comes off the timing chain tensioner, it is very dangerous because the plunger jumps out.

2. Remove the timing chain tensioner.

NOTE: At that time, the timing chain cannot be removed.

INSTALLATION SERVICE POINTS

>>A<< CRANKSHAFT SPROCKET / CRANKSHAFT SPACER INSTALLATION

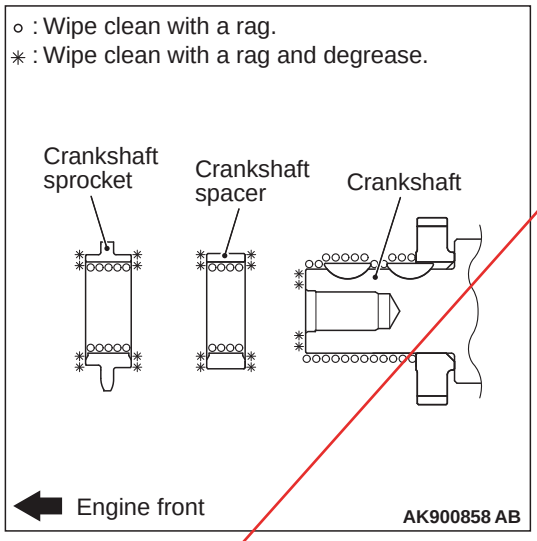

Use a rag to wipe off the dirt on the crankshaft sprocket, crankshaft spacer and the crankshaft. Remove the grease on the portion shown in the illustration.

NOTE: Remove the grease in order that adhered oil cannot decrease the wear coefficient of the pressed area.

>>B<< CRANKSHAFT KEY / TIMING CHAIN GUIDE / TENSIONER LEVER / TIMING CHAIN TENSIONER INSTALLATION

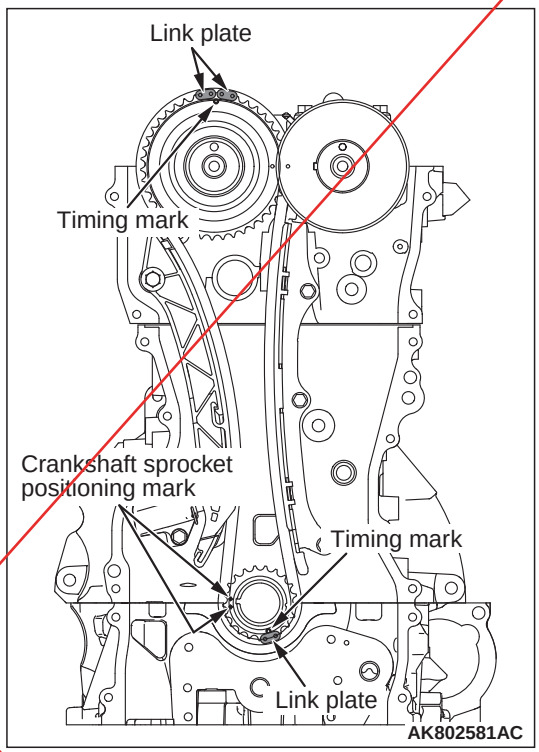

1. Install all of these so that the centers of two location marks of the crankshaft sprocket can align with the border line between the cylinder block and the lower crank case.
2. Install the crankshaft key.

   NOTE: This position becomes the No.1 cylinder compression top dead center finally.
3. Align the timing mark of the camshaft and the timing mark of the crankshaft sprocket with the link plate of the timing chain to install the timing chain.
4. Tighten the chain guide to the specified torque of 11 ± 3 N·m.
5. Tighten the tensioner lever to the specified torque of 24 ± 3 N·m. After the installation, check that the turn direction has flexibility at the bolt support point.
6. Tighten the timing chain tensioner to the specified torque of 11 ± 3 N·m.

<Deleted>

⚠ WARNING

If the timing chain tensioner set pin (fixed wire) suddenly comes off the timing chain tensioner, it is very dangerous because the plunger jumps out.

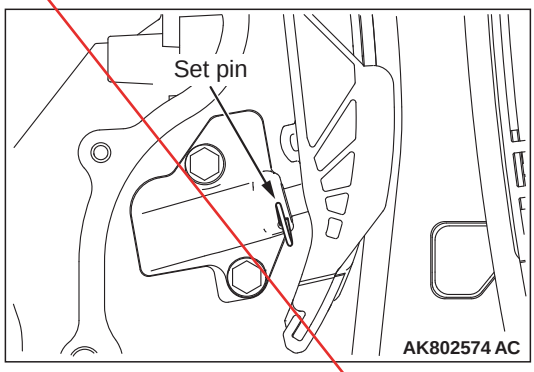

7. After that, pull out the set pin (fixed wire) to give tension to the timing chain.

   Check that the timing chain tensioner plunger fits securely into the tensioner lever groove.

   Check that the timing chain link securely engages with the gear without going beyond.

   Check that the timing chain does not deviate from the chain guide and the tensioner lever chain running surface.

8. Check that each timing mark aligns with two link plates of the timing chain.

INSPECTION

M1113026701131

VALVE CLEARANCE ADJUSTMENT

⚠ CAUTION

The crankshaft should always be rotated clockwise.

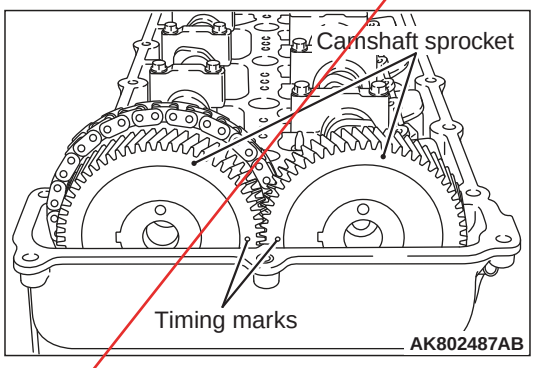

1. Align the camshaft sprocket timing marks and set the No. 1 cylinder at compression stroke top dead center.

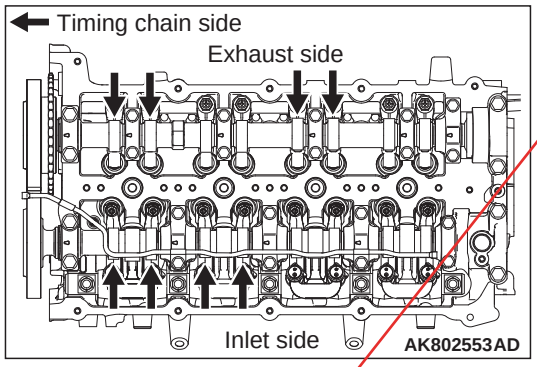

2. For the portions with the arrows shown below, measure and adjust the valve clearances by using the following procedures.

<Sides except inlet side without MIVEC>

1.)Using a thickness gauge, adjust the clearance between the cam and the roller.

Standard value (cold engine):
Inlet valve: 0.08 ± 0.03 mm
Exhaust valve: 0.16 ± 0.03 mm

⚠ CAUTION

Pay special attention that the tightening torque is not beyond this valve. If the tightening torque is beyond the valve, the valve stem would possibly bend.

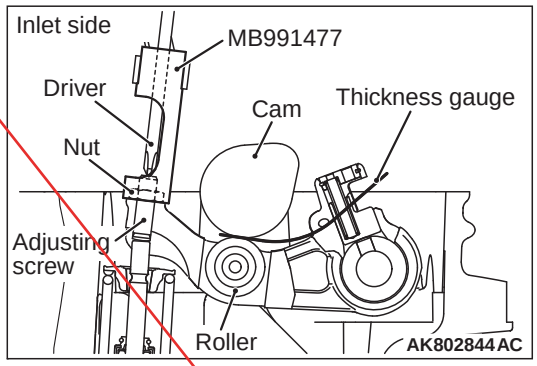

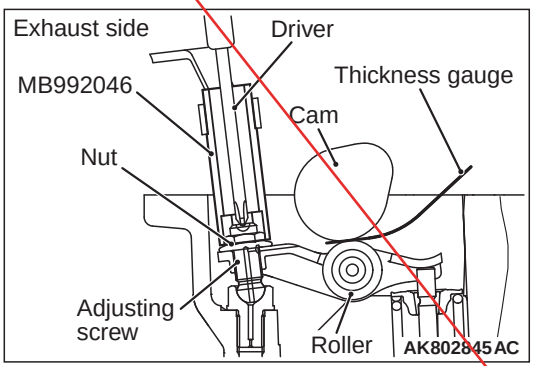

2.)While holding the adjusting screw with a screwdriver to prevent it from turning, tighten the lock nut to the specified torque using the special tool, valve adjusting socket.

Special tool (valve adjusting socket):
Inlet side: MB991477

<Deleted>

Exhaust side: MB992046

Tightening torque:
Inlet side: 9 ± 1 N·m
Exhaust side: 9.8 ± 1 N·m

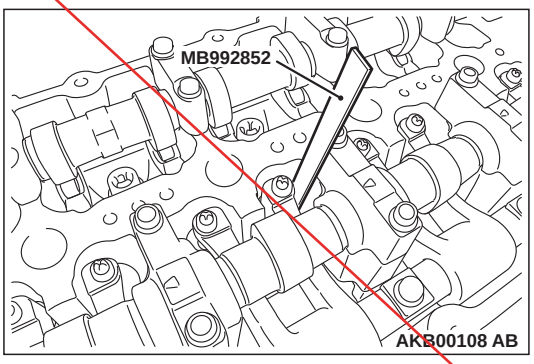

<Inlet side without MIVEC>

1.) Insert the special tool valve adjusting feeling gauge (MB992852) between the valve stem and the adjusting screw.

2). Adjust the clearance between the valve stem and adjusting screw to be within the standard value.

Standard value: 0.14 ± 0.03 mm

⚠ CAUTION

Pay special attention that the tightening torque is not beyond this valve. If the tightening torque is beyond the valve, the valve stem would possibly bend.

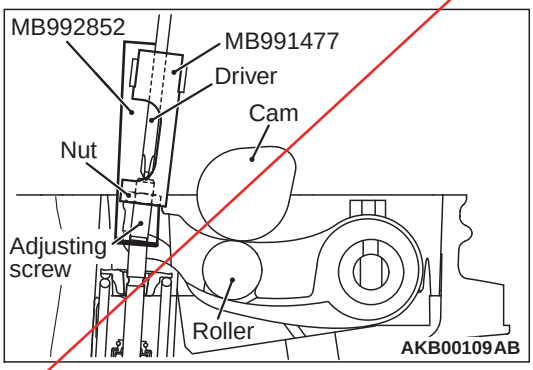

3.)While holding the adjusting screw with a screwdriver to prevent it from turning, tighten the lock nut to the specified torque using the special tool valve adjusting socket (MB991477).

Tightening torque: 9 ± 1 N·m

3. Turn the crankshaft 360° clockwise to bring No. 4 cylinder to the compression stroke top dead centre position.

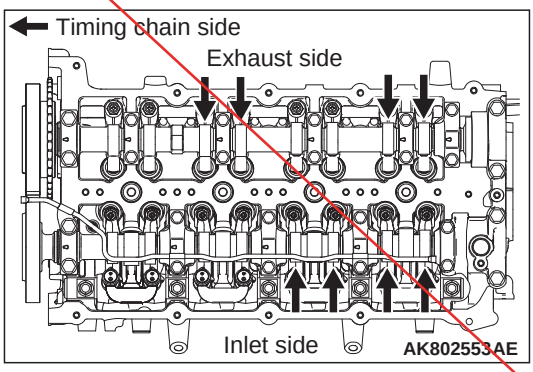

4. For the portions with the arrows shown below, measure and adjust the valve clearances by using the same procedures as ones in the Step 2.

TIMING CHAIN AND CAMSHAFT

REMOVAL AND INSTALLATION

M1113038300041

<MIVEC>

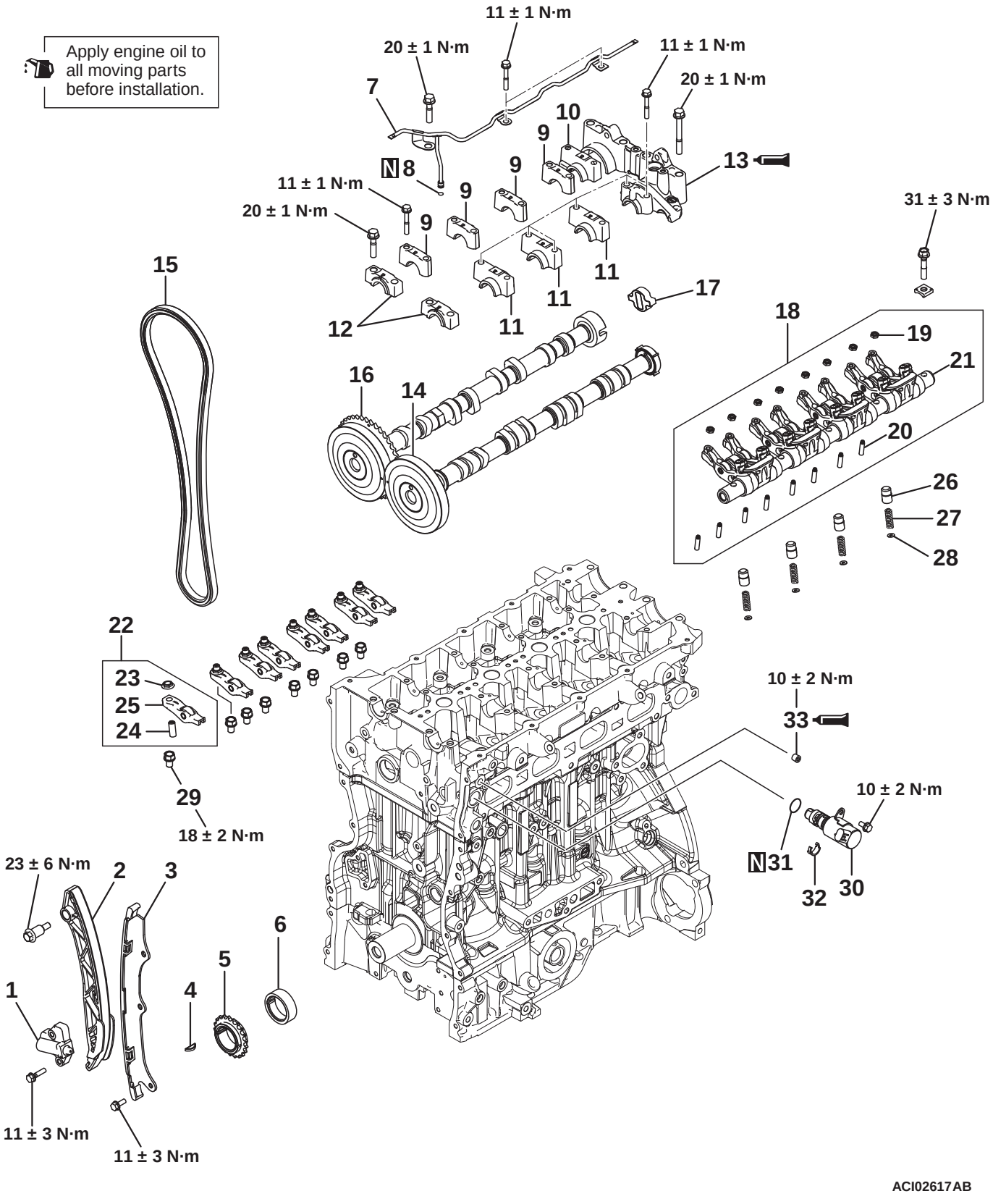

Removal steps

<<A>>	>>G<<	1. Timing chain tensioner
	>>G<<	2. Tensioner lever
	>>G<<	3. Timing chain guide
	>>G<<	4. Crankshaft key
	>>F<<	5. Crankshaft sprocket
	>>F<<	6. Crankshaft spacer
		7. Inlet oil pipe
		8. O-ring
<<B>>	>>E<<	9. Right A camshaft bearing cap
<<B>>	>>E<<	10. Right B camshaft bearing cap
<<B>>	>>E<<	11. Left camshaft bearing cap
<<B>>	>>E<<	12. Front camshaft bearing cap
<<B>>	>>E<<	13. Rear camshaft bearing cap
	>>D<<	14. Inlet camshaft
	>>D<<	15. Timing chain
	>>D<<	16. Exhaust camshaft
	>>C<<	17. Coupling

Removal steps (Continued)

<<C>>	18. Rocker arm and shaft assembly
	19. Nut
	20. Adjusting screw
	21. Rocker arm and shaft
	22. Exhaust rocker arm assembly
	23. Nut
	24. Adjusting screw
	25. Rocker arm
	26. Piston (for T-lever)
	27. Piston spring
	28. Piston spring seat
	29. Pivot bolt
>>B<<	30. Oil feeder control valve (OCV)
>>B<<	31. O-ring
	32. OCV filter
>>A<<	33. Taper plug

<Except MIVEC>

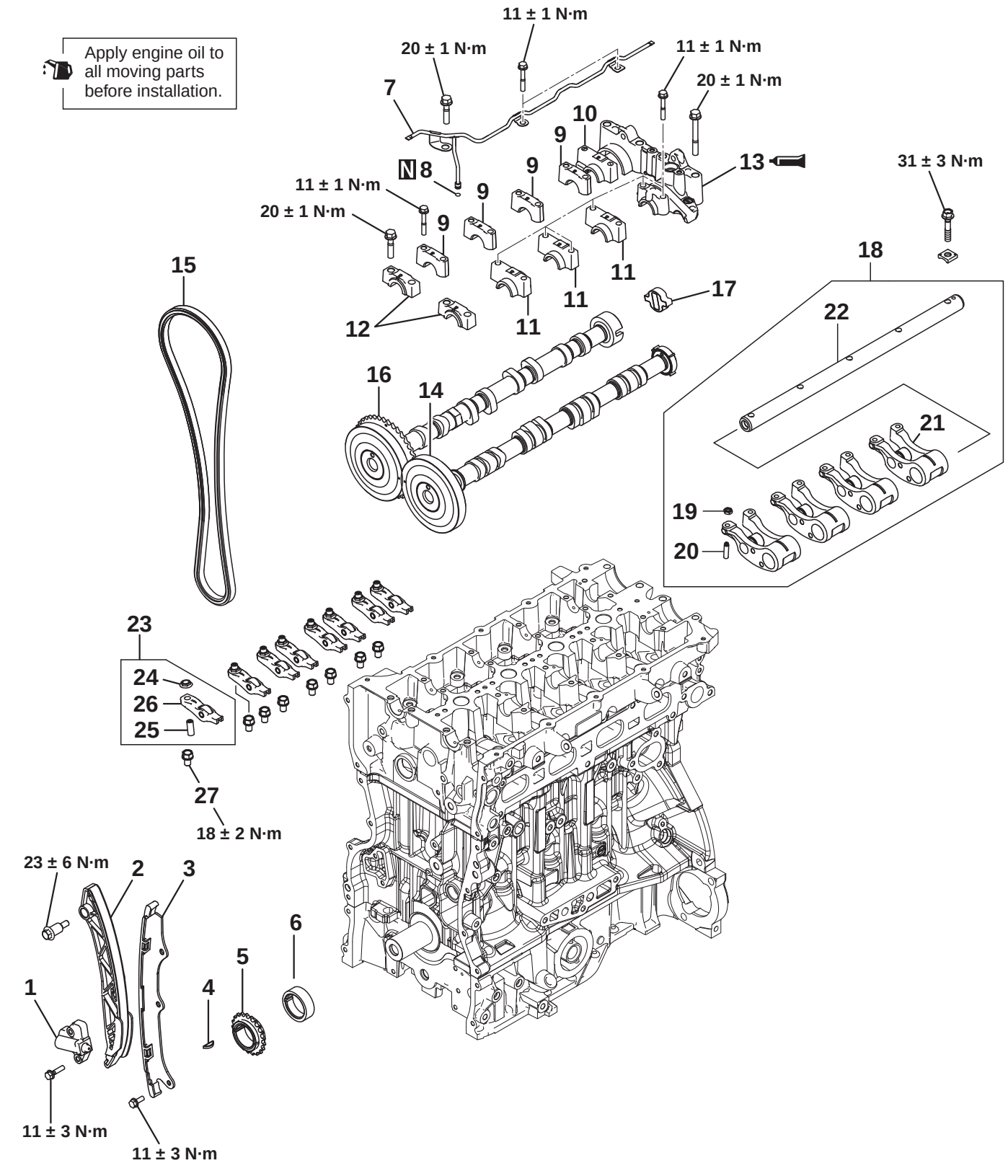

Removal steps

<<A>> >>G<< 1. Timing chain tensioner
>>G<< 2. Tensioner lever
>>G<< 3. Timing chain guide

Removal steps (Continued)

>>G<< 4. Crankshaft key
>>F<< 5. Crankshaft sprocket
>>F<< 6. Crankshaft spacer

Removal steps (Continued)

7. Inlet oil pipe
8. O-ring

<<B>> >>E<< 9. Right A camshaft bearing cap
<<B>> >>E<< 10. Right B camshaft bearing cap
<<B>> >>E<< 11. Left camshaft bearing cap
<<B>> >>E<< 12. Front camshaft bearing cap
<<B>> >>E<< 13. Rear camshaft bearing cap
>>D<< 14. Inlet camshaft
>>D<< 15. Timing chain
>>D<< 16. Exhaust camshaft
>>C<< 17. Coupling
<<C>> 18. Rocker arm and shaft assembly
19. Nut
20. Adjusting screw
21. Inlet rocker arm
22. Inlet rocker shaft
23. Exhaust rocker arm assembly
24. Nut
25. Adjusting screw
26. Rocker arm
27. Pivot bolt

REMOVAL SERVICE POINTS

<<A>> TIMING CHAIN TENSIONER REMOVAL

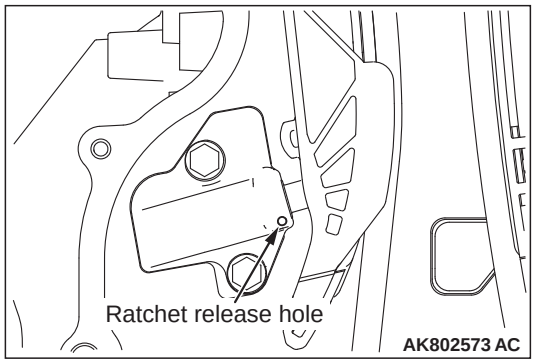

1. Push the tensioner lever by hand and push in the plunger of the timing chain tensioner until it hits the bottom. Then, insert a hard wire (piano wire or the like) of ϕ1.0 or hexagonal bar wrench (1.0 mm) into the fixing hole of the plunger.

⚠ *WARNING*

If the timing chain tensioner set pin (fixed wire) suddenly comes off the timing chain tensioner, it is very dangerous because the plunger jumps out.

2. Remove the timing chain tensioner.

NOTE: At that time, the timing chain cannot be removed.

<<B>> RIGHT "A" CAMSHAFT BEARING CAP / RIGHT "B" CAMSHAFT BEARING CAP / LEFT CAMSHAFT BEARING CAP / FRONT CAMSHAFT BEARING CAP / REAR CAMSHAFT BEARING CAP REMOVAL

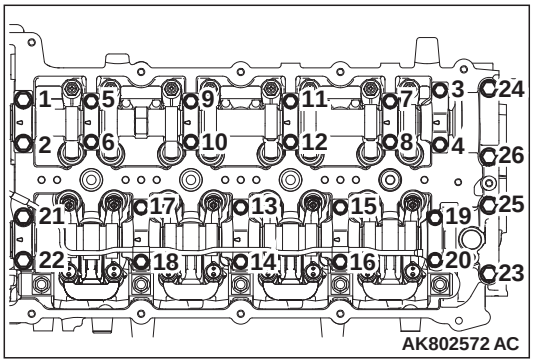

⚠ CAUTION

Loosing the installation bolts for the camshaft bearing cap at the same time causes the valve spring force, which makes the installation bolts jump out, resulting in the damaged threads. Gradually loosen them four or five times, not in one time.

Remove the installation bolts of each camshaft bearing cap in the order shown in the illustration.

<<C>> ROCKER ARM AND SHAFT ASSEMBLY REMOVAL

⚠ CAUTION

Never overhaul the rocker arm and the rocker shaft assembly.

INSTALLATION SERVICE POINTS

>>A<< TAPER PLUG INSTALLATION

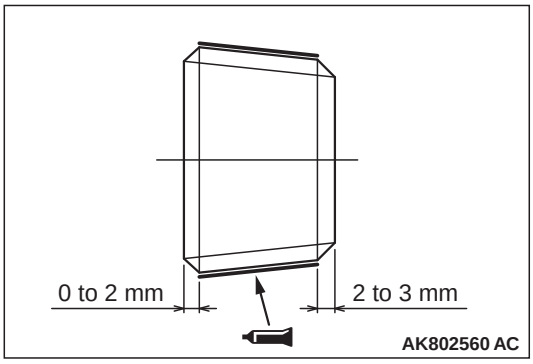

If the taper plug is reused, apply the sealant to the portion shown in the illustration.

Specified sealant:
Three bond 1215, Three bond 1212D or equivalent

>>B<< O-RING / OIL FEEDER CONTROL VALVE (OCV) INSTALLATION

⚠ CAUTION

- **The O-ring must not be reused.**
- **Wind non-adhesive tape (seal tape, etc.) around the notch of the oil passage of the oil feeder control valve before installing the O-ring to prevent damage. Damage to the O-ring causes oil leakage.**

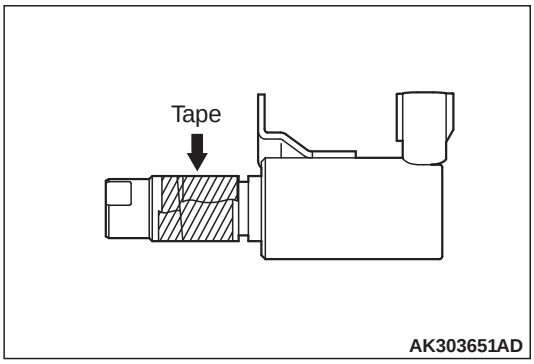

1. Apply a small amount of engine oil to the O-ring of the oil feeder control valve.
2. Install the oil feeder control valve to the cylinder head.
3. Tighten the oil feeder control bolts to the specified torque of 10 ± 2 N·m.

>>C<< COUPLING INSTALLATION

Apply oil to the entire coupling to install the coupling to the slit portion of the exhaust camshaft rear end.

NOTE: Do not install it wrongly. Do not drop it.

>>D<< EXHAUST CAMSHAFT / TIMING CHAIN / INLET CAMSHAFT INSTALLATION

1. Install the exhaust camshaft.

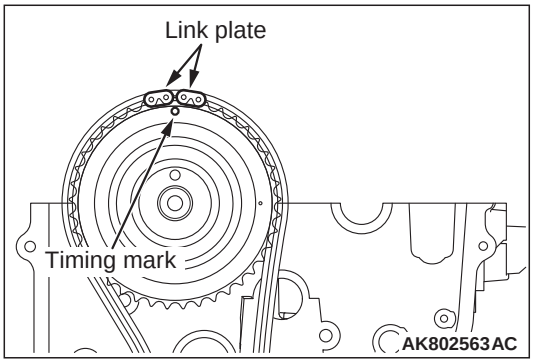

2. Align the timing chain link plate with the timing mark of the exhaust camshaft to loop the timing chain.

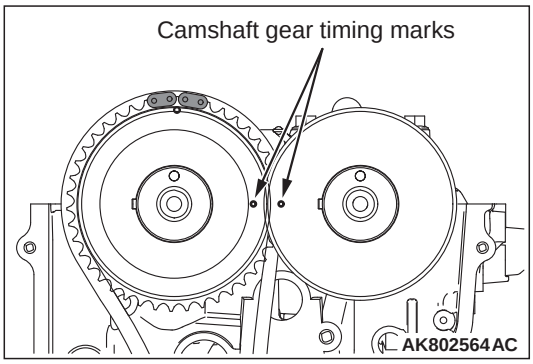

3. Install the inlet camshaft, Align the timing marks on each camshaft gear to install them.

>>E<< REAR CAMSHAFT BEARING CAP / FRONT CAMSHAFT BEARING CAP / LEFT CAMSHAFT BEARING CAP / RIGHT "B" CAMSHAFT BEARING CAP / RIGHT "A" CAMSHAFT BEARING CAP INSTALLATION

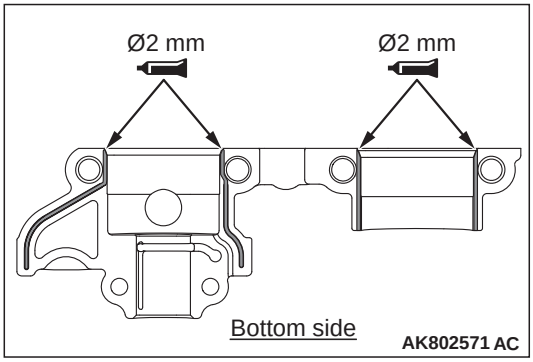

1. Apply the liquid gasket to the rear camshaft bearing cap, as shown in the illustration.

Specified sealant:
Three bond 1217G or equivalent

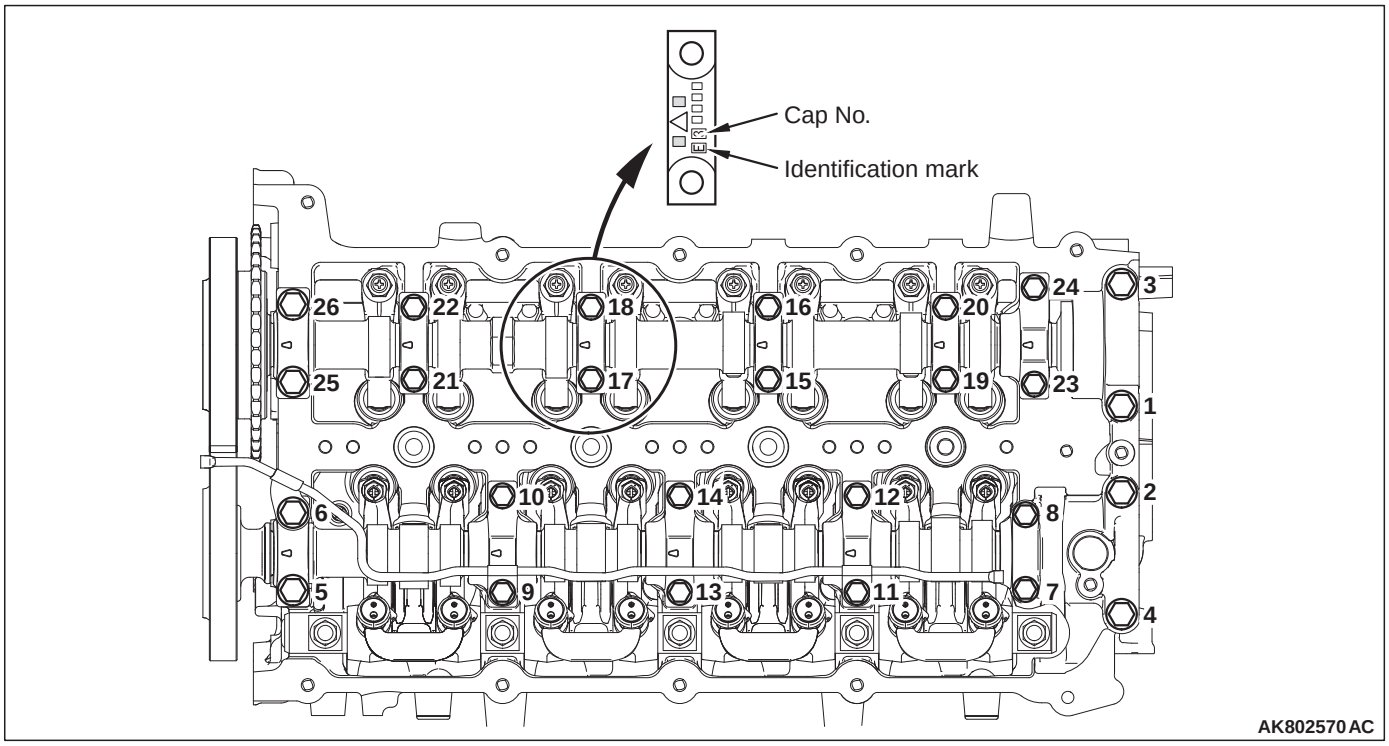

2. Install each camshaft bearing cap to the cylinder head.

   NOTE: Check the identification codes regarding the cap No. Check whether it is for the inlet side or the exhaust side.

   Identification mark (stamped on each camshaft bearing cap)
   I: Inlet side
   E: Exhaust side

3. Install a new O-ring to the oil pipe.
4. Install the oil pipe to the camshaft bearing cap.
5. Tighten the camshaft bearing cap bolts to the specified torque in the order shown in the illustration.

   Specified torque
   M6: 11 ± 1 N·m
   M8: 20 ± 1 N·m

>>F<< CRANKSHAFT SPACER / CRANKSHAFT SPROCKET INSTALLATION

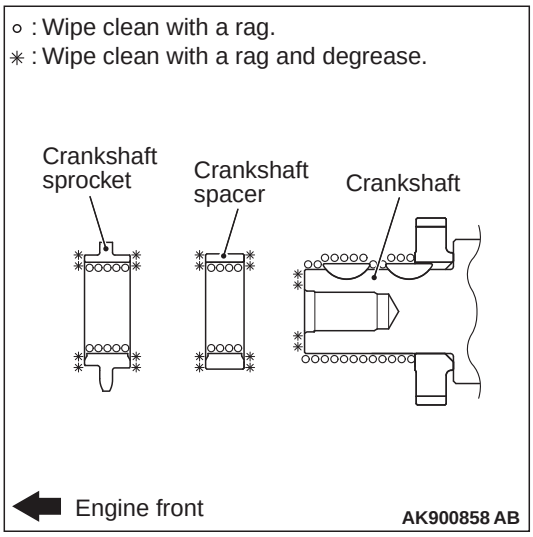

Use a rag to wipe off the dirt on the crankshaft sprocket, crankshaft spacer and the crankshaft. Remove the grease on the portion shown in the illustration.

NOTE: Remove the grease in order that adhered oil cannot decrease the wear coefficient of the pressed area.

>>G<< CRANKSHAFT KEY / TIMING CHAIN GUIDE / TENSIONER LEVER / TIMING CHAIN TENSIONER INSTALLATION

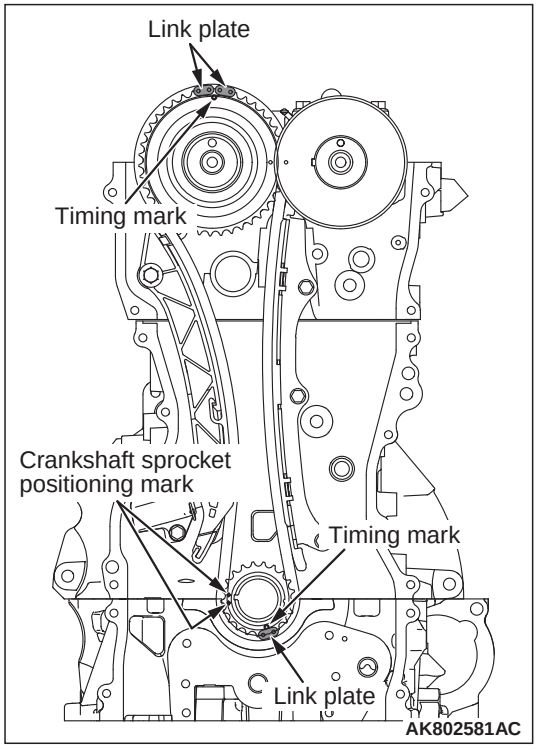

1. Install all of these so that the centres of two location marks of the crankshaft sprocket can align with the border line between the cylinder block and the lower crank case.
2. Install the crankshaft key.

   NOTE: This position becomes the No.1 cylinder compression top dead centre finally.
3. Align the timing mark of the camshaft and the timing mark of the crankshaft sprocket with the link plate of the timing chain to install the timing chain.
4. Tighten the chain guide to the specified torque of 11 ± 3 N·m.
5. Tighten the tensioner lever to the specified torque of 24 ± 3 N·m. After the installation, check that the turn direction has flexibility at the bolt support point.
6. Tighten the timing chain tensioner to the specified torque of 11 ± 3 N·m.

⚠ *WARNING*

If the timing chain tensioner set pin (fixed wire) suddenly comes off the timing chain tensioner, it is very dangerous because the plunger jumps out.

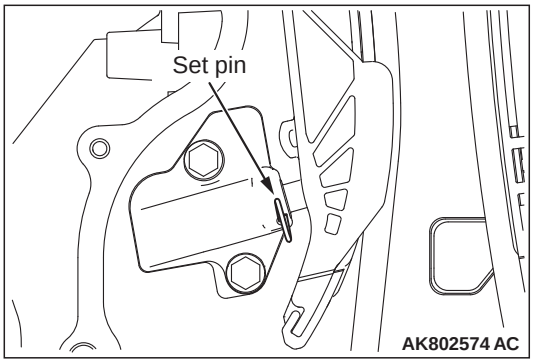

7. After that, pull out the set pin (fixed wire) to give tension to the timing chain.

   Check that the timing chain tensioner plunger fits securely into the tensioner lever groove.

   Check that the timing chain link securely engages with the gear without going beyond.

   Check that the timing chain does not deviate from the chain guide and the tensioner lever chain running surface.
8. Check that each timing mark aligns with two link plates of the timing chain.

INSPECTION

M1113038900043

VALVE CLEARANCE ADJUSTMENT

⚠ CAUTION

The crankshaft should always be rotated clockwise.

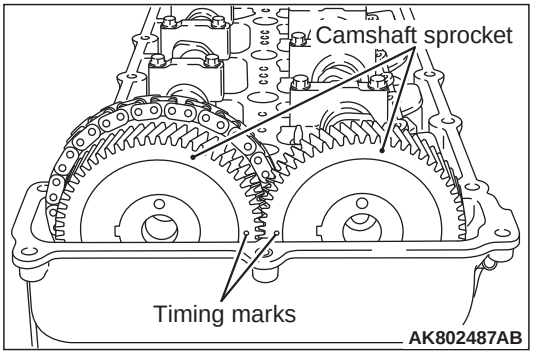

1. Align the camshaft sprocket timing marks and set the No. 1 cylinder at compression stroke top dead center.

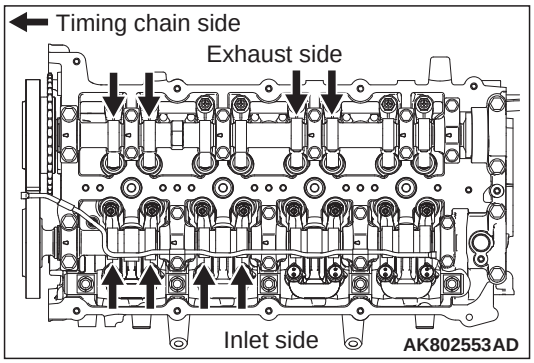

2. For the portions with the arrows shown below, measure and adjust the valve clearances by using the following procedures.

<Sides except inlet side without MIVEC>

1.)Using a thickness gauge, adjust the clearance between the cam and the roller.

Standard value (cold engine):
Inlet valve: 0.08 ± 0.03 mm
Exhaust valve: 0.16 ± 0.03 mm

⚠ CAUTION

Pay special attention that the tightening torque is not beyond this valve. If the tightening torque is beyond the valve, the valve stem would possibly bend.

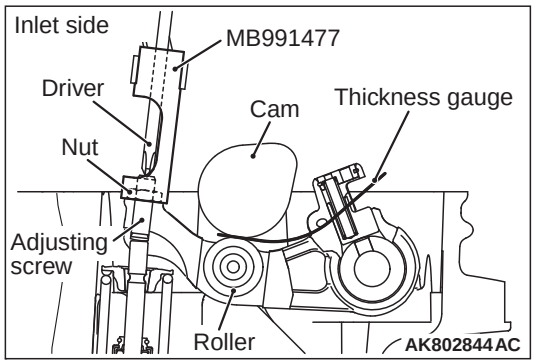

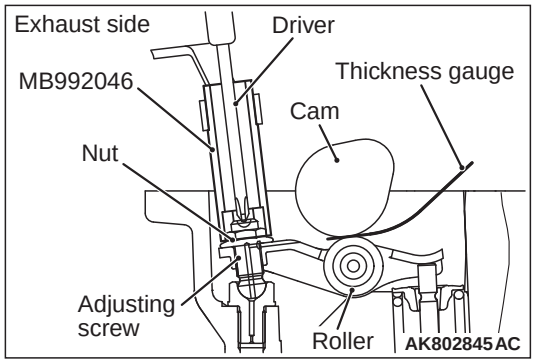

2.)While holding the adjusting screw with a screwdriver to prevent it from turning, tighten the lock nut to the specified torque using the special tool, valve adjusting socket.

Special tool (valve adjusting socket):
Inlet side: MB991477
Exhaust side: MB992046

Tightening torque:
Inlet side: 9 ± 1 N·m
Exhaust side: 9.8 ± 1 N·m

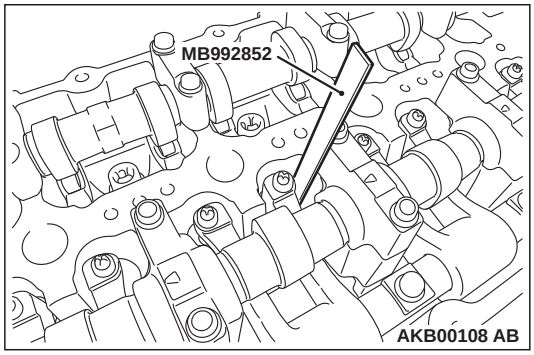

<Inlet side without MIVEC>

1.) Insert the special tool valve adjusting feeling gauge (MB992852) between the valve stem and the adjusting screw.

2). Adjust the clearance between the valve stem and adjusting screw to be within the standard value.

Standard value: 0.14 ± 0.03 mm

⚠ CAUTION

Pay special attention that the tightening torque is not beyond this valve. If the tightening torque is beyond the valve, the valve stem would possibly bend.

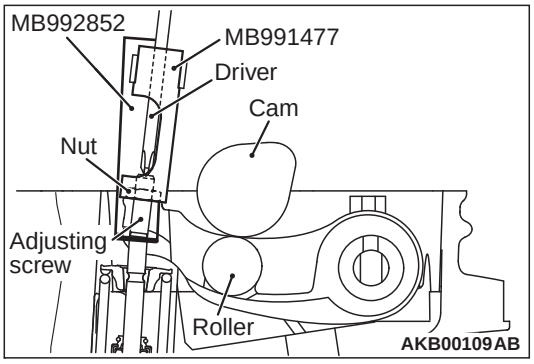

3.)While holding the adjusting screw with a screwdriver to prevent it from turning, tighten the lock nut to the specified torque using the special tool valve adjusting socket (MB991477).

Tightening torque: 9 ± 1 N·m

3. Turn the crankshaft 360° clockwise to bring No. 4 cylinder to the compression stroke top dead centre position.

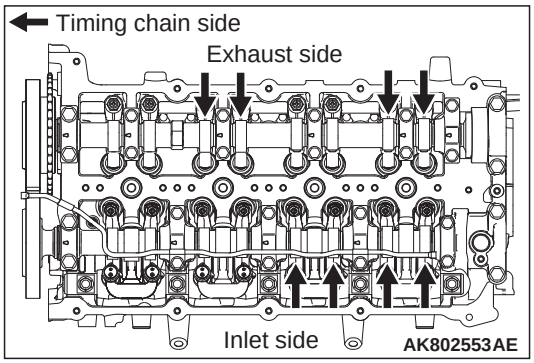

4. For the portions with the arrows shown below, measure and adjust the valve clearances by using the same procedures as ones in the Step 2.

CAMSHAFT INSPECTION

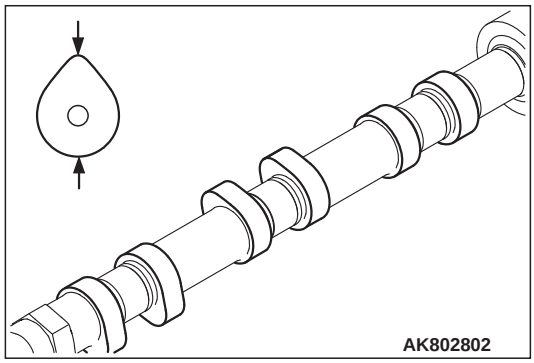

Measure the cam height (cam long diameter). If it goes beyond the limit value, replace the camshaft.

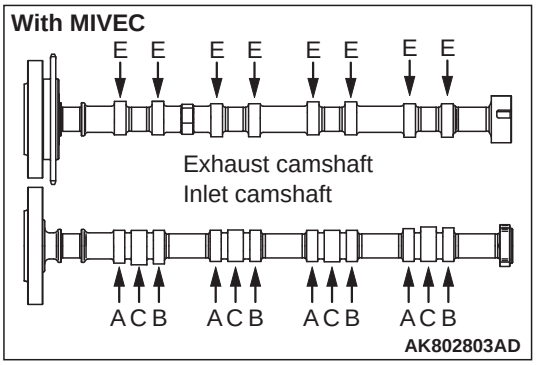

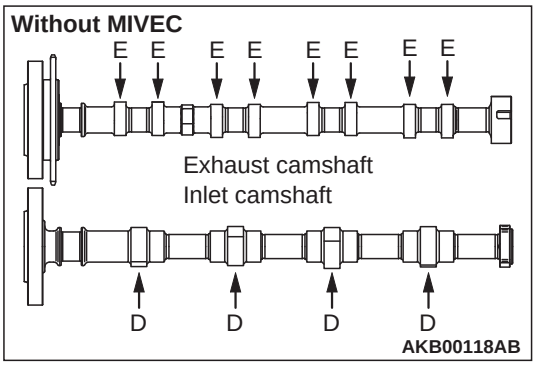

Cam			standard mm	Limit mm
Inlet <with MIVEC>	Low A	A	34.685	34.185
	Low B	B	36.414	35.914
	High	C	36.790	36.290
Inlet <without MIVEC>		D	36.414	35.914
Exhaust		E	36.669	36.169

CAMSHAFT

REMOVAL AND INSTALLATION

M1113026900905

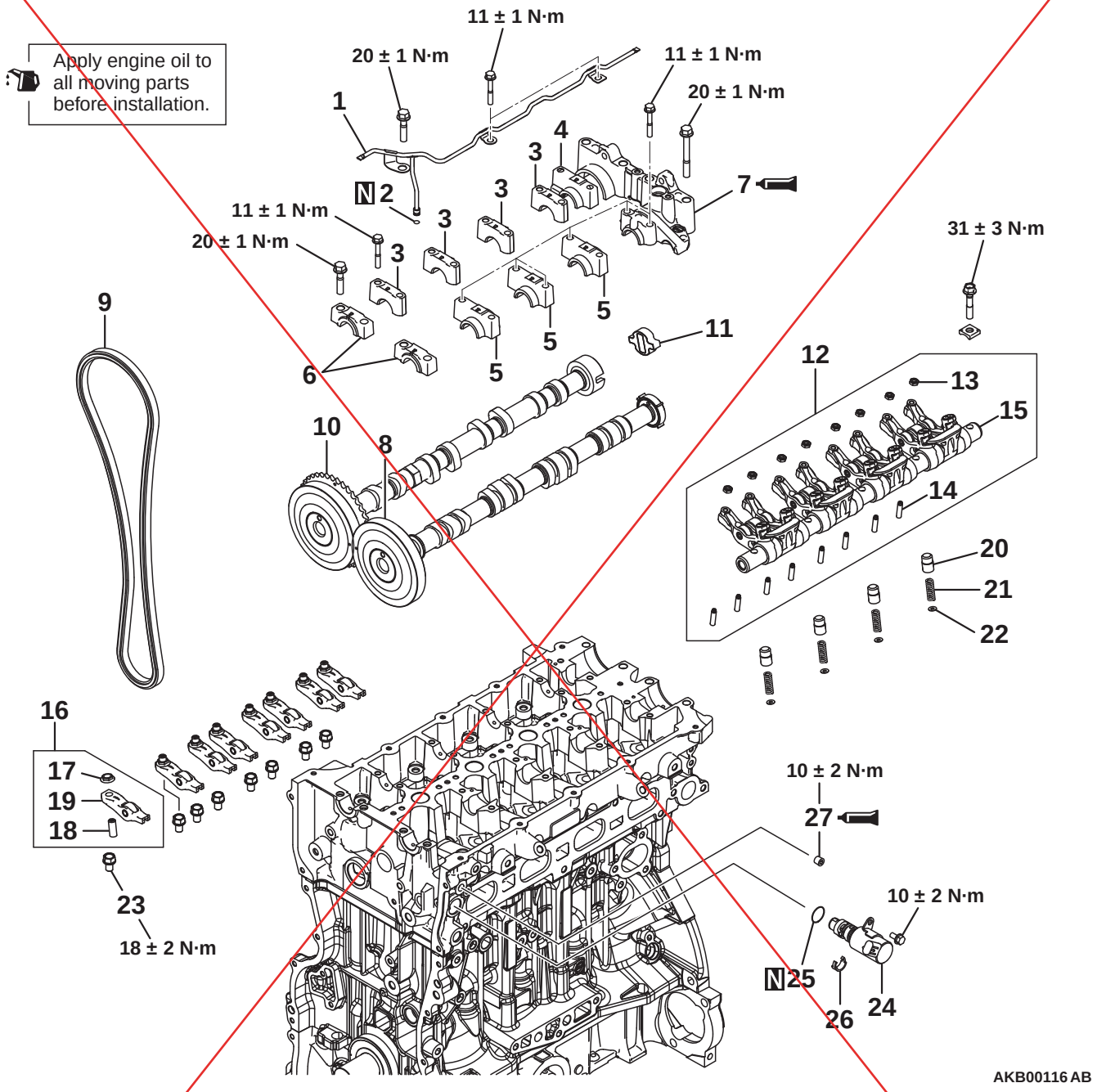

Removal steps

	1.	Inlet oil pipe
	2.	O-ring
<<A>> >>E<<	3.	Right A camshaft bearing cap
<<A>> >>E<<	4.	Right B camshaft bearing cap
<<A>> >>E<<	5.	Left camshaft bearing cap
<<A>> >>E<<	6.	Front camshaft bearing cap
<<A>> >>E<<	7.	Rear camshaft bearing cap
>>D<<	8.	Inlet camshaft
>>D<<	9.	Timing chain
>>D<<	10.	Exhaust camshaft
>>C<<	11.	Coupling

<<B>>

Removal steps (Continued)

12. Rocker arm and shaft assembly
13. Nut
14. Adjusting screw
15. Rocker arm and shaft
16. Exhaust rocker arm assembly
17. Nut
18. Adjusting screw
19. Rocker arm
20. Piston (for T-lever)
21. Piston spring
22. Piston spring seat

<Deleted>

Removal steps (Continued)

23. Pivot bolt
>>B<< 24. Oil feeder control valve (OCV)
25. O-ring
26. OCV filter
>>A<< 27. Taper plug

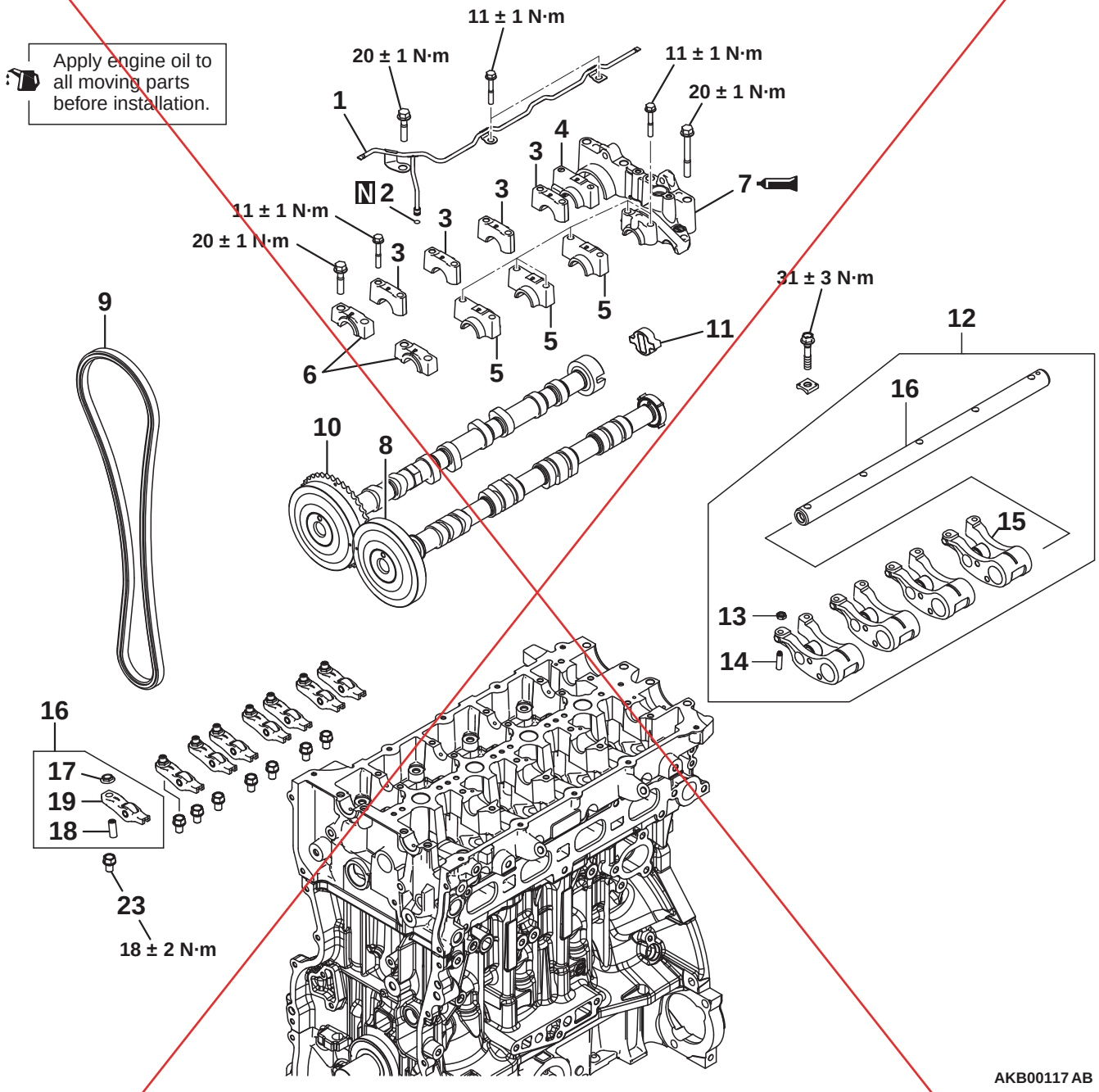

Removal steps

1. Inlet oil pipe
2. O-ring
<<A>> >>E<< 3. Right A camshaft bearing cap
<<A>> >>E<< 4. Right B camshaft bearing cap
<<A>> >>E<< 5. Left camshaft bearing cap
<<A>> >>E<< 6. Front camshaft bearing cap
<<A>> >>E<< 7. Rear camshaft bearing cap
>>D<< 8. Inlet camshaft
>>D<< 9. Timing chain

Removal steps (Continued)

>>D<< 10. Exhaust camshaft
>>C<< 11. Coupling
<<B>> 12. Rocker arm and shaft assembly
13. Nut
14. Adjusting screw
15. Inlet rocker arm
16. Inlet rocker shaft
17. Exhaust rocker arm assembly
18. Nut

Removal steps (Continued)

19. Adjusting screw
20. Rocker arm
21. Pivot bolt

REMOVAL SERVICE POINTS

<<A>> RIGHT "B" CAMSHAFT / RIGHT "A" CAMSHAFT BEARING CAP / LEFT CAMSHAFT BEARING CAP / FRONT CAMSHAFT BEARING CAP / REAR CAMSHAFT BEARING CAP REMOVAL

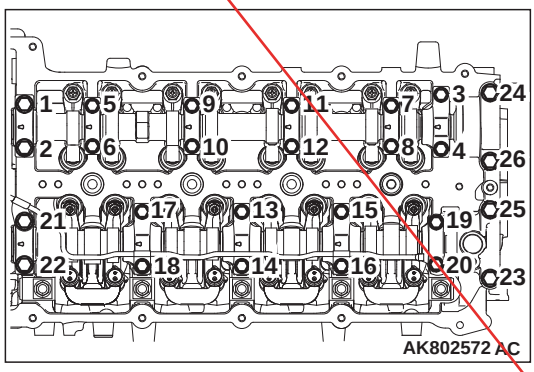

⚠ CAUTION

Loosing the installation bolts for the camshaft bearing cap at the same time causes the valve spring force, which makes the installation bolts jump out, resulting in the damaged threads. Gradually loosen them four or five times, not in one time.

Remove the installation bolts of each camshaft bearing cap in the order shown in the illustration.

<<B>> ROCKER ARM AND ROCKER SHAFT ASSEMBLY

⚠ CAUTION

Never overhaul the rocker arm and the rocker shaft assembly.

INSTALLATION SERVICE POINTS

>>A<< TAPER PLUG INSTALLATION

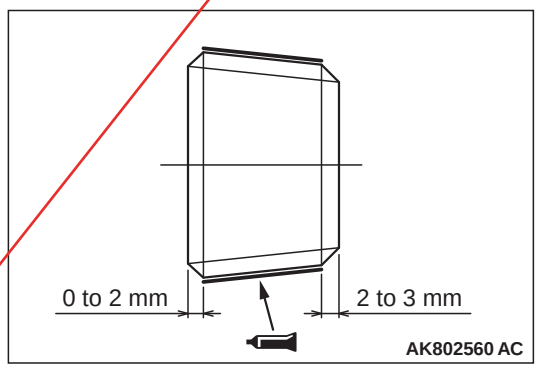

If the taper plug is reused, apply the sealant to the portion shown in the illustration.

Specified sealant:
Three bond 1215, Three bond 1212D or equivalent

>>B<< O-RING / OIL FEEDER CONTROL VALVE (OCV) INSTALLATION

⚠ CAUTION

- **The O-ring must not be reused.**
- **Wind non-adhesive tape (seal tape, etc.) around the notch of the oil passage of the oil feeder control valve before installing the O-ring to prevent damage. Damage to the O-ring causes oil leakage.**

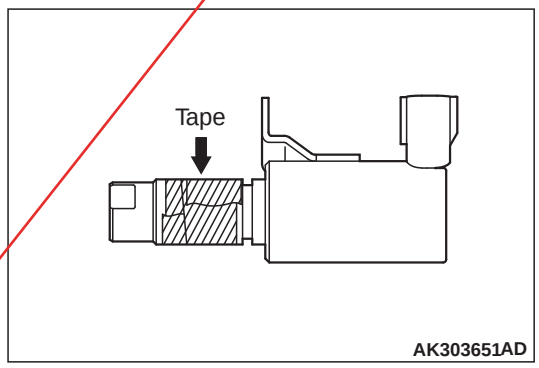

1. Apply a small amount of engine oil to the O-ring of the oil feeder control valve.
2. Install the oil feeder control valve to the cylinder head.
3. Tighten the oil feeder control bolts to the specified torque of 10 ± 2 N·m.

>>C<< COUPLING INSTALLATION

Apply oil to the entire coupling to install the coupling to the slit portion of the exhaust camshaft rear end.

NOTE: Do not install it wrongly. Do not drop it.

>>D<< CAMSHAFT INLET / TIMING CHAIN / CAMSHAFT EXHAUST INSTALLATION

1. Install the exhaust camshaft.

<Deleted>

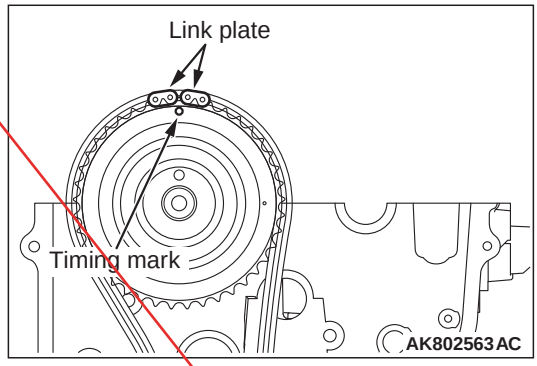

2. Align the timing chain link plate with the timing mark of the exhaust camshaft to loop the timing chain.

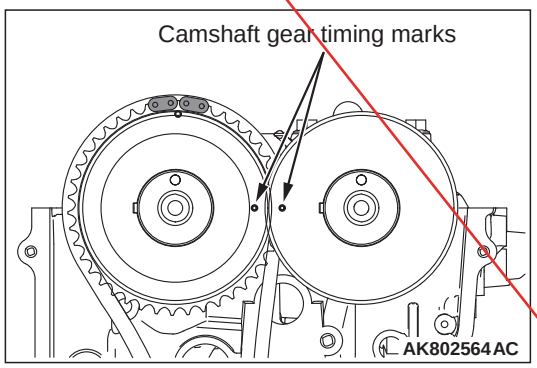

3. Install the inlet camshaft, Align the timing marks on each camshaft gear to install them.

>>E<< RIGHT "B" CAMSHAFT / RIGHT "A" CAMSHAFT BEARING CAP / LEFT CAMSHAFT BEARING CAP / FRONT CAMSHAFT BEARING CAP / REAR CAMSHAFT BEARING CAP INSTALLATION

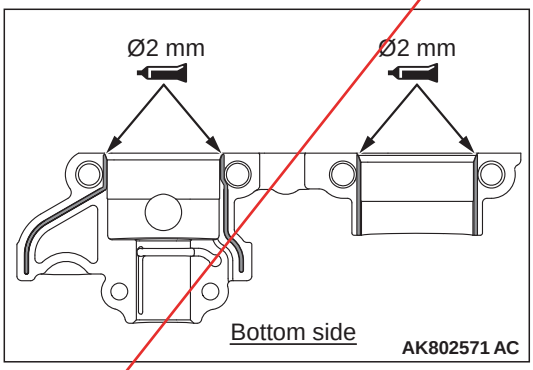

1. Apply the liquid gasket to the rear camshaft bearing cap, as shown in the illustration.

Specified sealant:
Three bond 1217G or equivalent

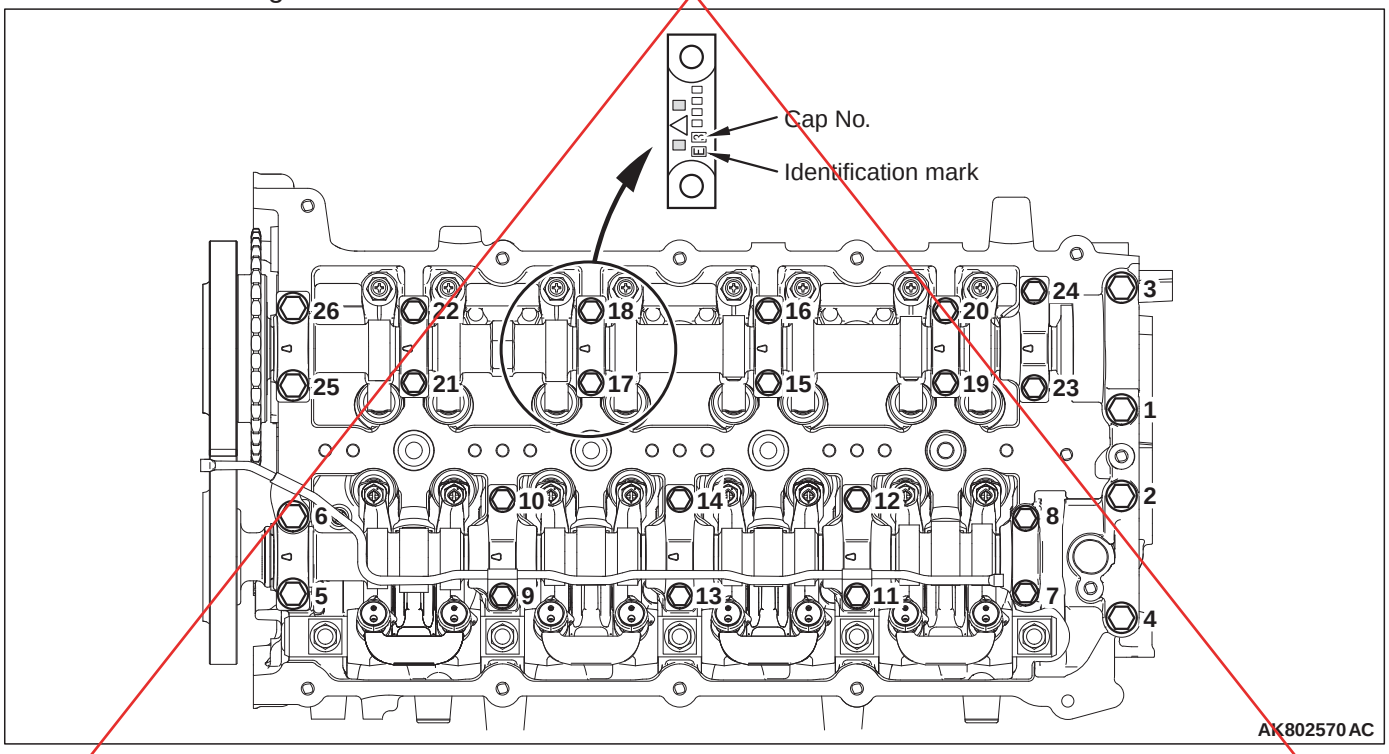

2. Install each camshaft bearing cap to the cylinder head.

NOTE: Check the identification codes regarding the cap No. Check whether it is for the inlet side or the exhaust side.

Identification mark (stamped on each camshaft bearing cap)
I: Inlet side
E: Exhaust side

3. Install a new O- ring to the oil pipe.

4. Install the oil pipe to the camshaft bearing cap.
5. Tighten the camshaft bearing cap bolts to the specified torque in the order shown in the illustration.

Specified torque
M6: 11 ± 1 N·m
M8: 20 ± 1 N·m

INSPECTION

CAMSHAFT

M1113027000949

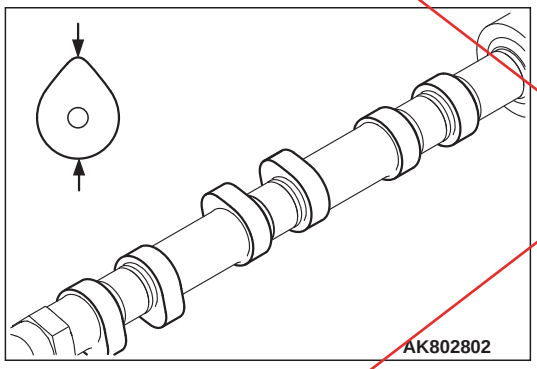

Measure the cam height (cam long diameter). If it goes beyond the limit value, replace the camshaft.

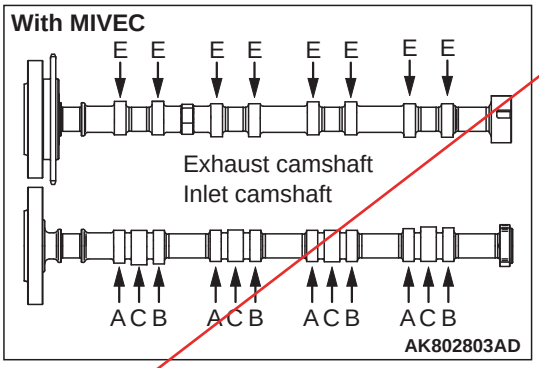

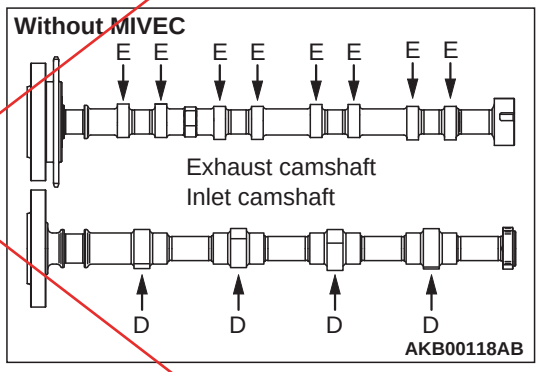

Cam			standard mm	Limit mm
Inlet <with MIVEC>	Low A	A	34.685	34.185
	Low B	B	36.414	35.914
	High	C	36.790	36.290
Inlet <without MIVEC>		D	36.414	35.914
Exhaust		E	36.669	36.169

<Correct> Attached sheet 9 (8/20 to 20/20)

Attached sheet 9 (1/20)

<Incorrect>

TIMING CHAIN

REMOVAL AND INSTALLATION

M1113026601338

<4N13>

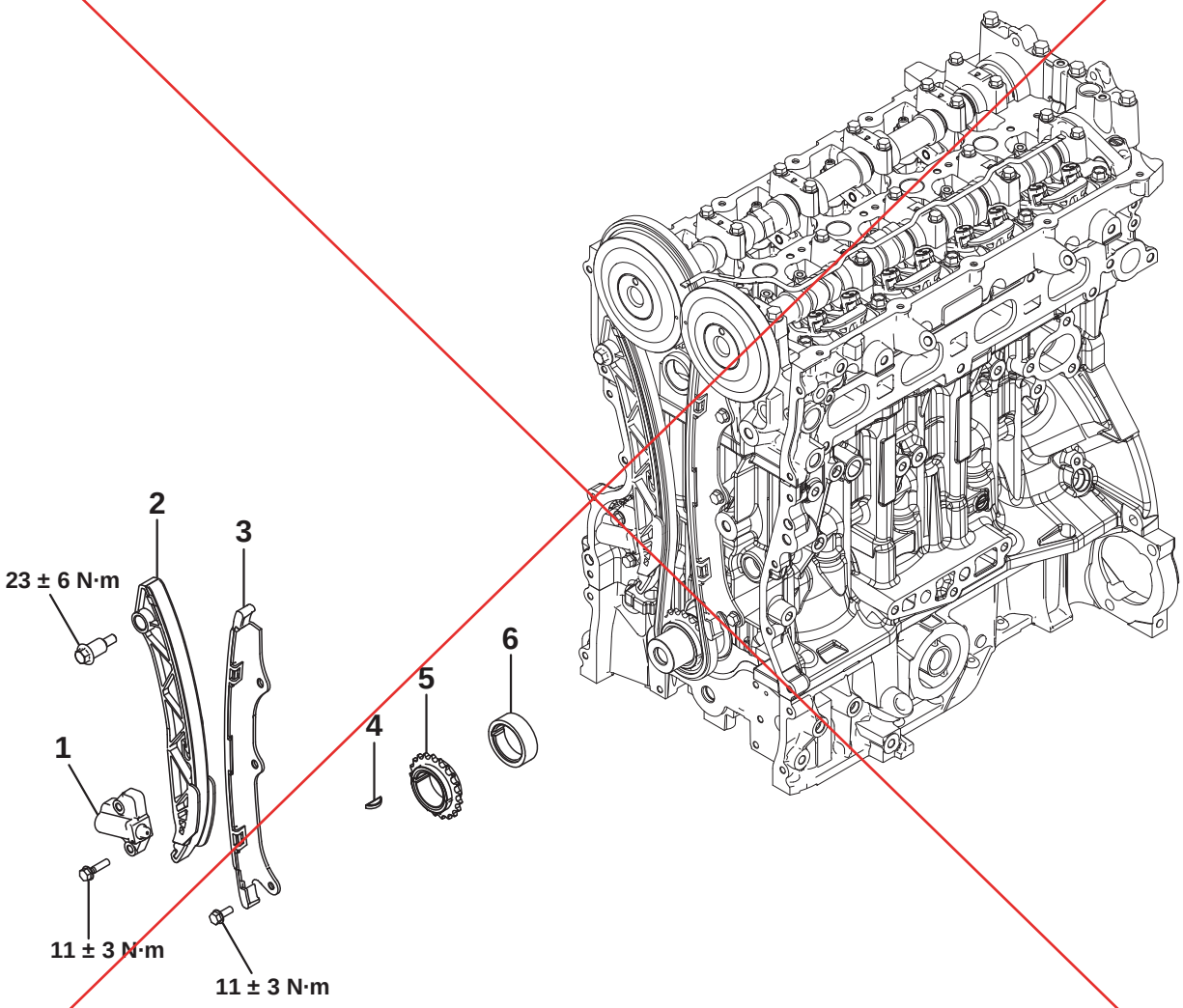

AK900855 AB

Removal steps

<<A>> >>E<< 1. Timing chain tensioner
>>E<< 2. Tensioner lever
>>E<< 3. Timing chain guide

Removal steps (Continued)

>>E<< 4. Crankshaft key
>>B<< 5. Crankshaft sprocket
>>B<< 6. Crankshaft spacer

<4N14>

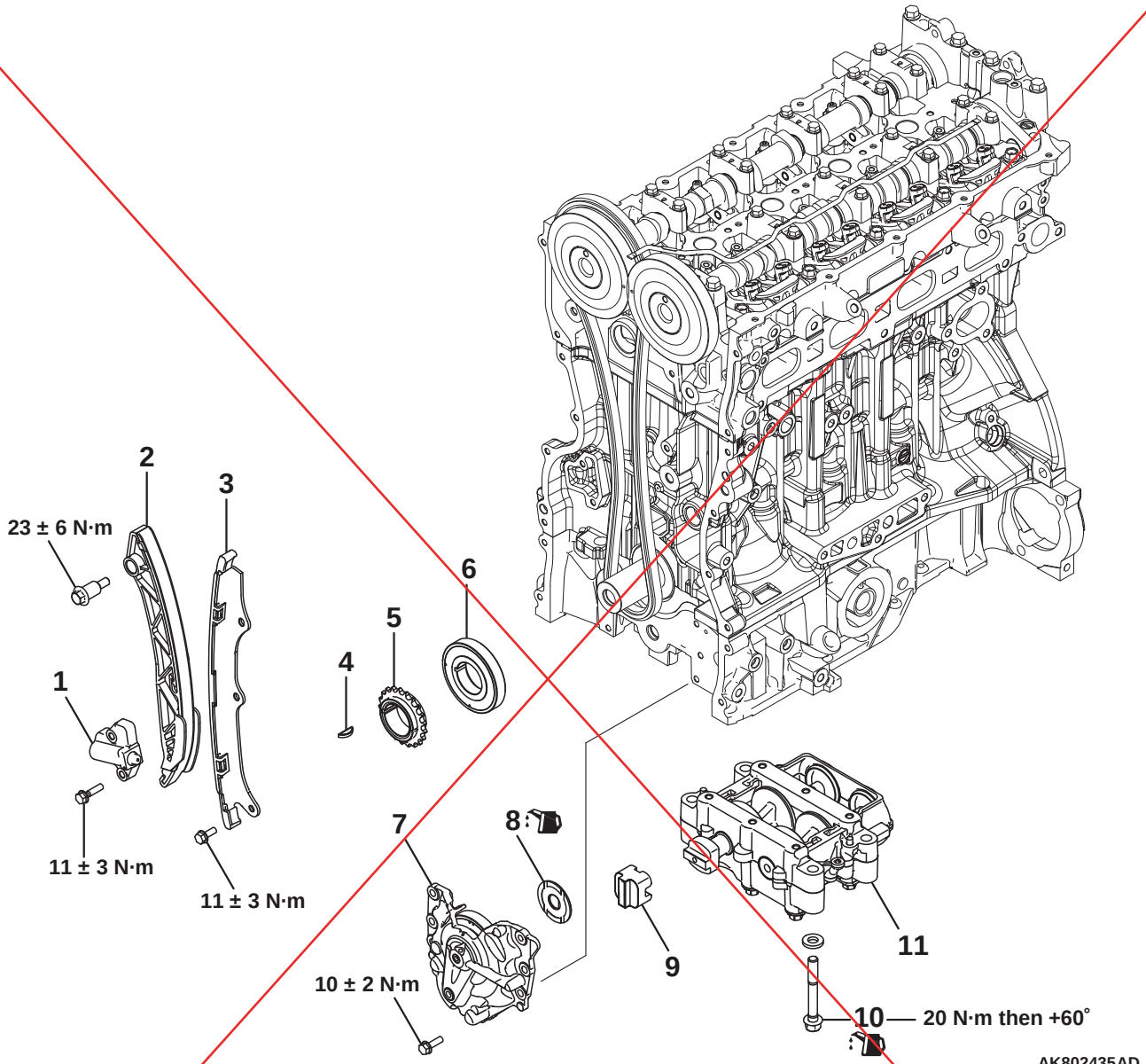

Removal steps

<<A>> >>E<< 1. Timing chain tensioner
>>E<< 2. Tensioner lever
>>E<< 3. Timing chain guide
>>E<< 4. Crankshaft key
>>D<< 5. Crankshaft sprocket
>>C<< 6. Crankshaft gear
>>C<< 7. Balancer shaft drive housing and gear
>>C<< 8. Trust plate
>>C<< 9. Coupling

Removal steps (Continued)

>>A<< 10. Balancer unit bolt
>>A<< 11. Balancer unit*

*NOTE: *: The balancer unit must not be overhauled for the assembly assurance.*

<Deleted>

REMOVAL SERVICE POINT

<<A>> TIMING CHAIN TENSIONER REMOVAL

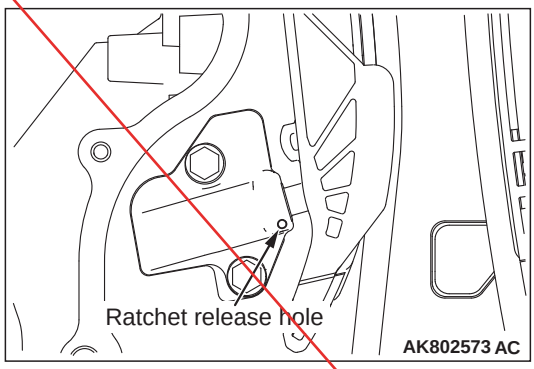

1. Push the tensioner lever by hand and push in the plunger of the timing chain tensioner until it hits the bottom. Then, insert a hard wire (piano wire or the like) of ϕ1.0 or hexagonal bar wrench (1.0 mm) into the fixing hole of the plunger.

⚠ *WARNING*

If the timing chain tensioner set pin (fixed wire) suddenly comes off the timing chain tensioner, it is very dangerous because the plunger jumps out.

2. Remove the timing chain tensioner.

NOTE: At that time, the timing chain cannot be removed.

INSTALLATION SERVICE POINTS

>>A<< BALANCER UNIT / BALANCER UNIT BOLT INSTALLATION

1. Apply the appropriate and minimum amount of engine oil to the balance unit bolt thread portion and the lower portion of the flange.

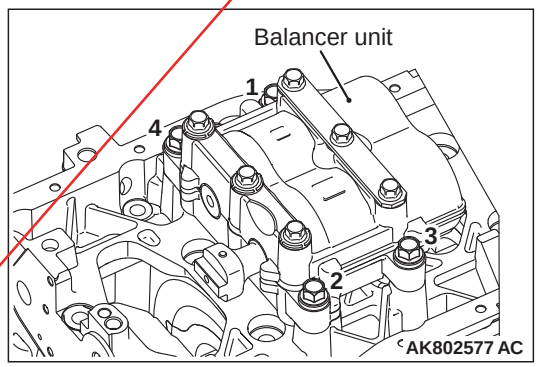

2. Install the balancer unit to the lower crankcase and tighten them to the tighten torque of 20 N·m in the order shown in the illustration.

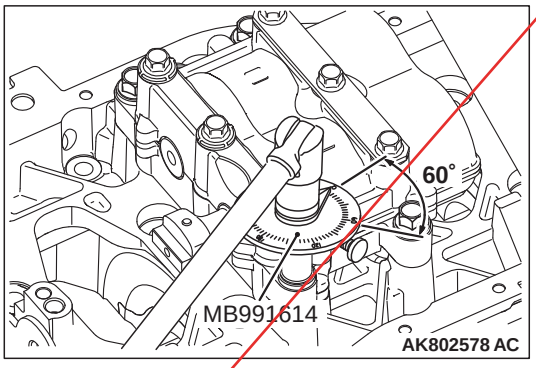

3. Use Special Tool Angle Gauge (MB991614) to tighten them an additional 60°.

>>B<< CRANKSHAFT SPROCKET / CRANKSHAFT SPACER INSTALLATION

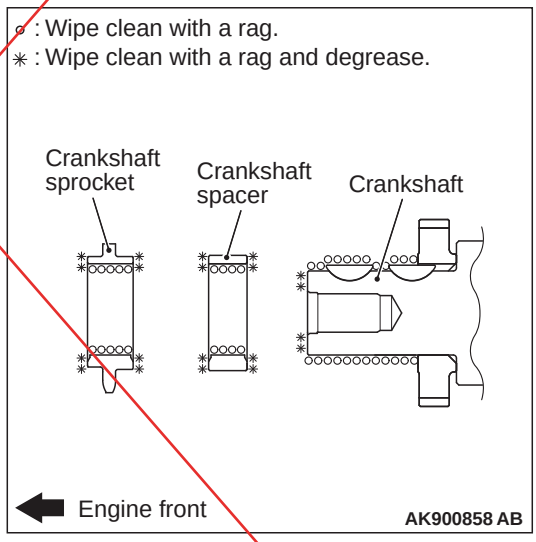

Use a rag to wipe off the dirt on the crankshaft sprocket, crankshaft spacer and the crankshaft. Remove the grease on the portion shown in the illustration.

NOTE: Remove the grease in order that adhered oil cannot decrease the wear coefficient of the pressed area.

<Deleted>

>>C<< BALANCER SHAFT DRIVE HOUSING AND GEAR / COUPLING / TRUST PLATE / CRANKSHAFT GEAR INSTALLATION

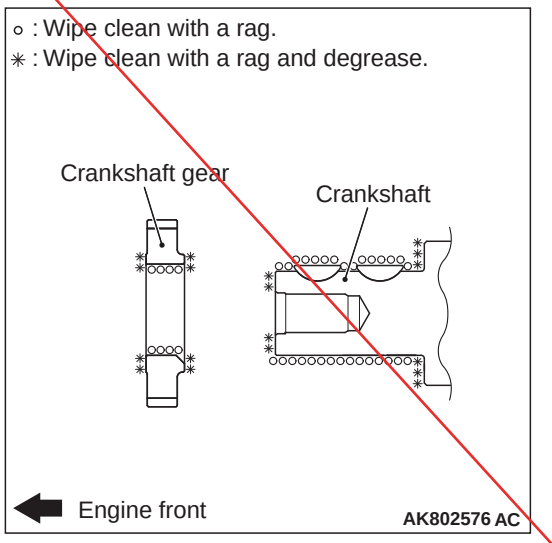

1. Use a rag to wipe off the dirt on the crankshaft gear and the crankshaft. Remove the grease on the portion shown in the illustration.

NOTE: Remove the grease in order that adhered oil cannot decrease the wear coefficient of the pressed area.

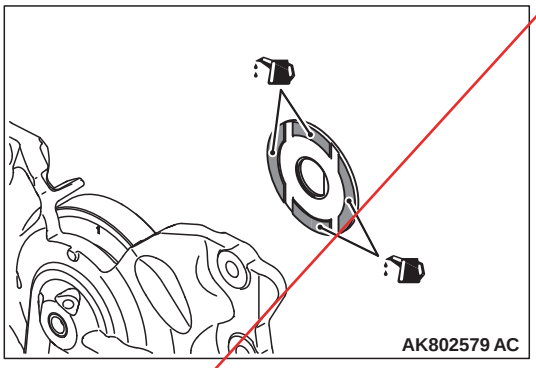

2. Apply the appropriate and minimum amount of engine oil to the thrust plate, as shown in the illustration.
3. Install all of these so that the thrust plate face where the engine oil is applied can face toward the balancer shaft drive housing & gear.

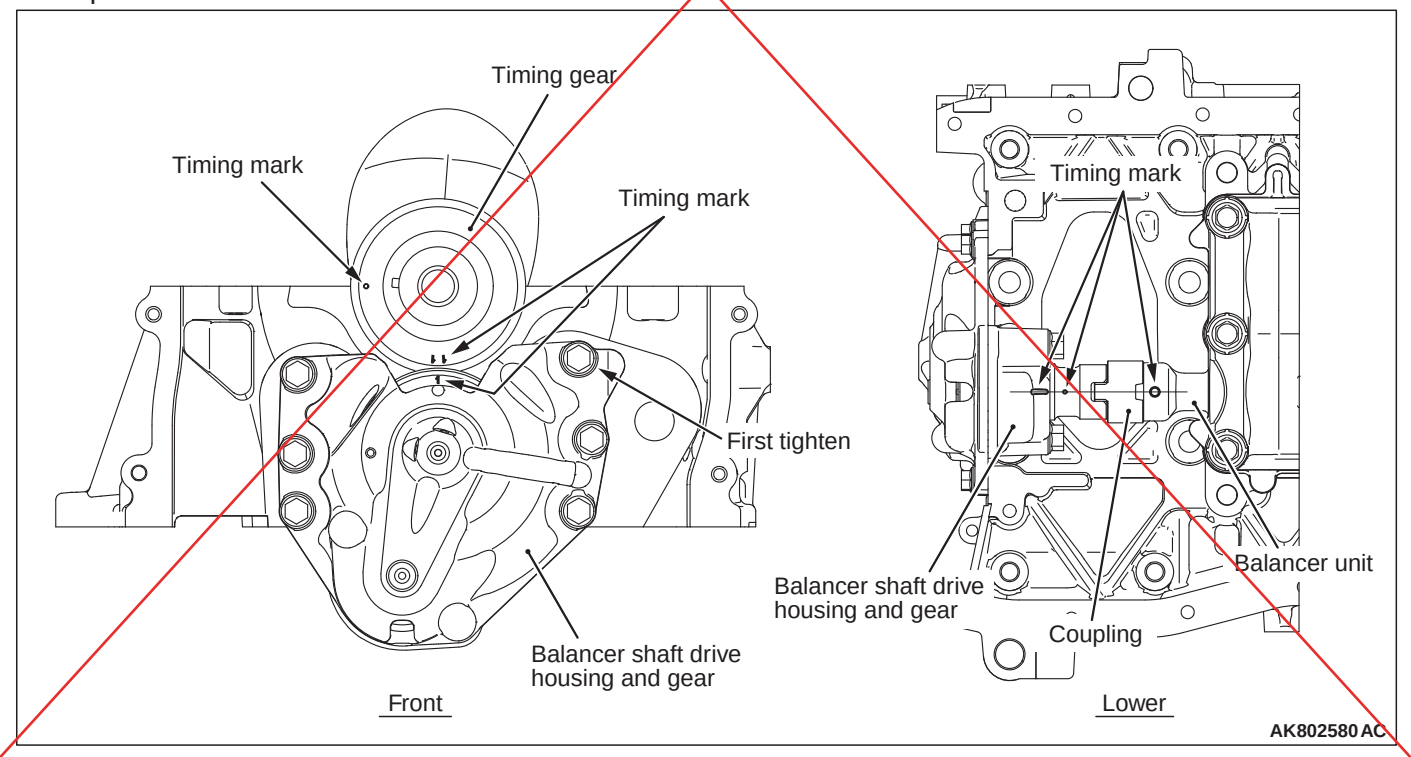

4. Install all of these aligning all the timing marks.

<Deleted>

5. When tightening the balancer shaft drive housing and the gear, tighten the bolt shown in the illustration first.

>>D<< CRANKSHAFT SPROCKET INSTALLATION

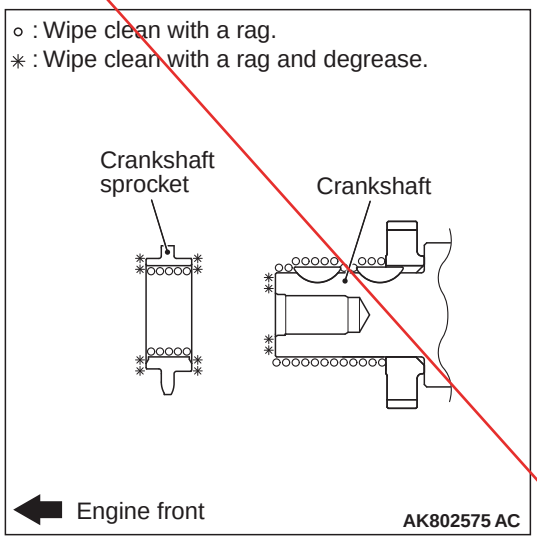

Use a rag to wipe off the dirt on the crankshaft sprocket and the crankshaft. Remove the grease on the portion shown in the illustration.

NOTE: Remove the grease in order that adhered oil cannot decrease the wear coefficient of the pressed area.

>>E<< CRANKSHAFT KEY / TIMING CHAIN GUIDE / TENSIONER LEVER / TIMING CHAIN TENSIONER INSTALLATION

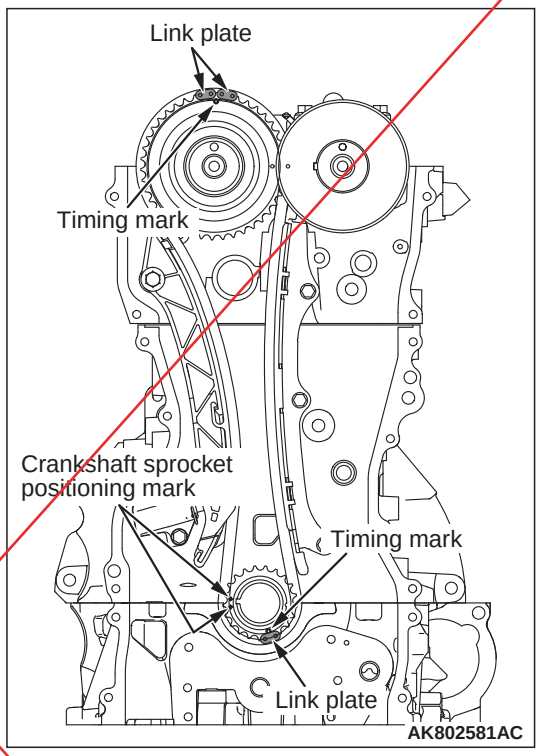

1. Install all of these so that the centres of two location marks of the crankshaft sprocket can align with the border line between the cylinder block and the lower crank case.
2. Install the crankshaft key.

   NOTE: This position becomes the No.1 cylinder compression top dead centre finally.
3. Align the timing mark of the camshaft and the timing mark of the crankshaft sprocket with the link plate of the timing chain to install the timing chain.
4. Tighten the chain guide to the specified torque of 11 ± 3 N·m.
5. Tighten the tensioner lever to the specified torque of 24 ± 3 N·m. After the installation, check that the turn direction has flexibility at the bolt support point.
6. Tighten the timing chain tensioner to the specified torque of 11 ± 3 N·m.

<Deleted>

⚠ WARNING

If the timing chain tensioner set pin (fixed wire) suddenly comes off the timing chain tensioner, it is very dangerous because the plunger jumps out.

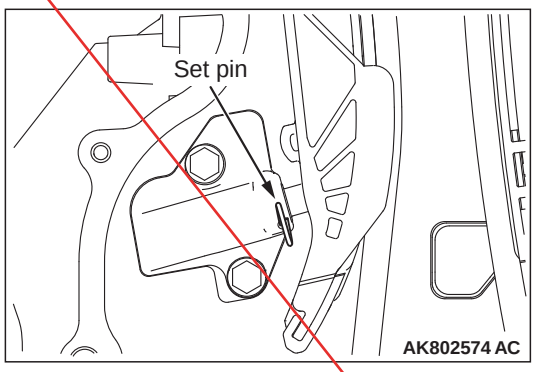

7. After that, pull out the set pin (fixed wire) to give tension to the timing chain.

   Check that the timing chain tensioner plunger fits securely into the tensioner lever groove.

   Check that the timing chain link securely engages with the gear without going beyond.

   Check that the timing chain does not deviate from the chain guide and the tensioner lever chain running surface.

8. Check that each timing mark aligns with two link plates of the timing chain.

INSPECTION

M1113026701131

VALVE CLEARANCE ADJUSTMENT

⚠ CAUTION

The crankshaft should always be rotated clockwise.

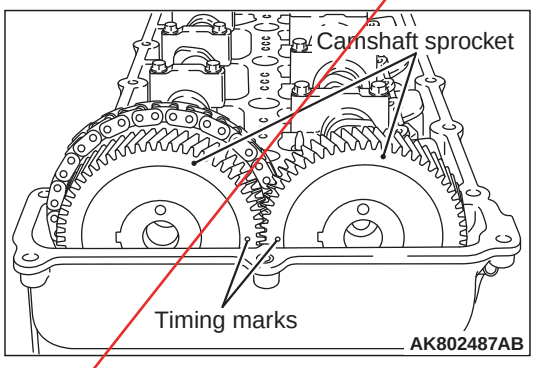

1. Align the camshaft sprocket timing marks and set the No. 1 cylinder at compression stroke top dead centre.

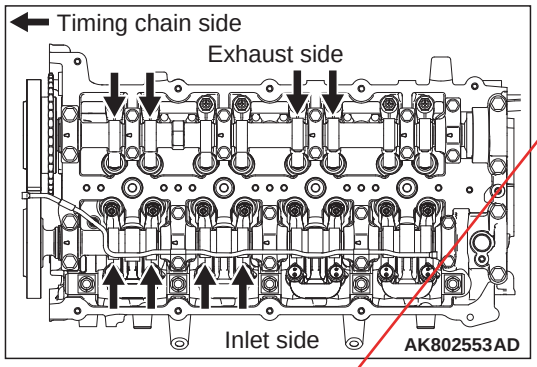

2. For the portions with the arrows shown below, measure and adjust the valve clearances by using the following procedures.

<Sides except inlet side without MIVEC>

1.)Using a thickness gauge, adjust the clearance between the cam and the roller.

Standard value (cold engine):
Inlet valve: 0.08 ± 0.03 mm
Exhaust valve: 0.16 ± 0.03 mm

⚠ CAUTION

Pay special attention that the tightening torque is not beyond this valve. If the tightening torque is beyond the valve, the valve stem would possibly bend.

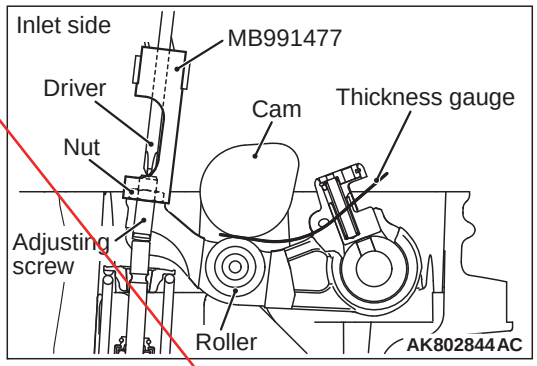

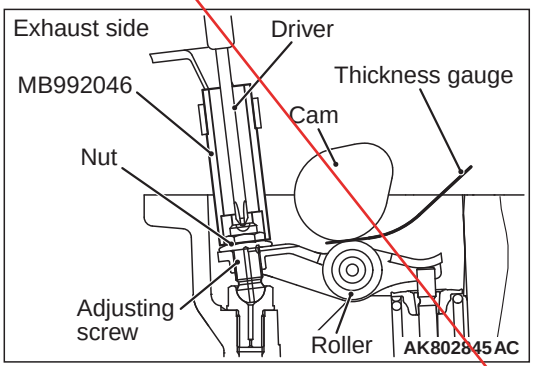

2.)While holding the adjusting screw with a screwdriver to prevent it from turning, tighten the lock nut to the specified torque using the special tool, valve adjusting socket.

Special tool (valve adjusting socket):
Inlet side: MB991477

<Deleted>

Exhaust side: MB992046

Tightening torque:
Inlet side: 9 ± 1 N·m
Exhaust side: 9.8 ± 1 N·m

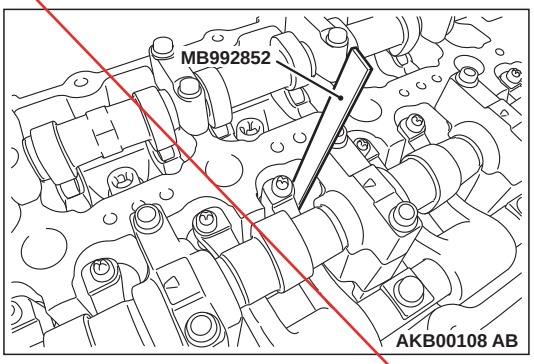

<Inlet side without MIVEC>

1.) Insert the special tool valve adjusting feeling gauge (MB992852) between the valve stem and the adjusting screw.

2). Adjust the clearance between the valve stem and adjusting screw to be within the standard value.

Standard value: 0.14 ± 0.03 mm

⚠ CAUTION

Pay special attention that the tightening torque is not beyond this valve. If the tightening torque is beyond the valve, the valve stem would possibly bend.

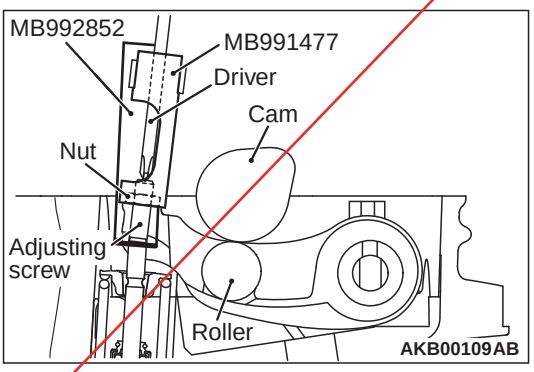

3.)While holding the adjusting screw with a screwdriver to prevent it from turning, tighten the lock nut to the specified torque using the special tool valve adjusting socket (MB991477).

Tightening torque: 9 ± 1 N·m

3. Turn the crankshaft 360° clockwise to bring No. 4 cylinder to the compression stroke top dead centre position.

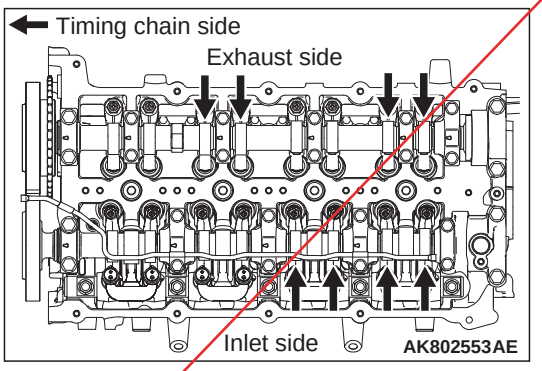

4. For the portions with the arrows shown below, measure and adjust the valve clearances by using the same procedures as ones in the Step 2.

TIMING CHAIN AND CAMSHAFT

REMOVAL AND INSTALLATION

M1113038300052

<4N13 (MIVEC)>

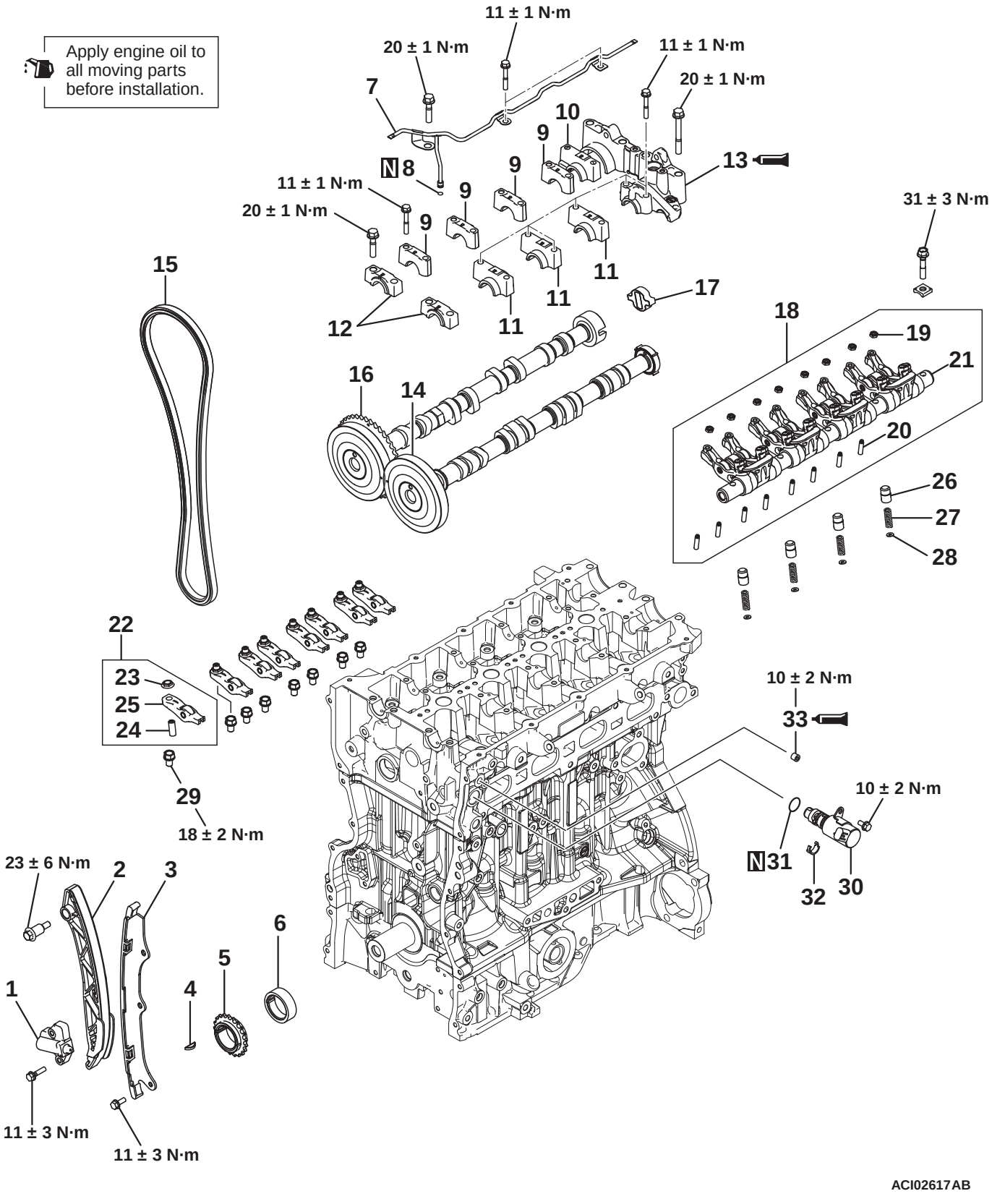

Removal steps

<<A>>	>>J<<	1. Timing chain tensioner
	>>J<<	2. Tensioner lever
	>>J<<	3. Timing chain guide
	>>J<<	4. Crankshaft key
	>>I<<	5. Crankshaft sprocket
	>>I<<	6. Crankshaft spacer
		7. Inlet oil pipe
		8. O-ring
<<B>>	>>E<<	9. Right A camshaft bearing cap
<<B>>	>>E<<	10. Right B camshaft bearing cap
<<B>>	>>E<<	11. Left camshaft bearing cap
<<B>>	>>E<<	12. Front camshaft bearing cap
<<B>>	>>E<<	13. Rear camshaft bearing cap
	>>D<<	14. Inlet camshaft
	>>D<<	15. Timing chain
	>>D<<	16. Exhaust camshaft
	>>C<<	17. Coupling

Removal steps (Continued)

<<C>>	18. Rocker arm and shaft assembly
	19. Nut
	20. Adjusting screw
	21. Rocker arm and shaft
	22. Exhaust rocker arm assembly
	23. Nut
	24. Adjusting screw
	25. Rocker arm
	26. Piston (for T-lever)
	27. Piston spring
	28. Piston spring seat
	29. Pivot bolt
>>B<<	30. Oil feeder control valve (OCV)
>>B<<	31. O-ring
	32. OCV filter
>>A<<	33. Taper plug

<4N13 (Except MIVEC)>

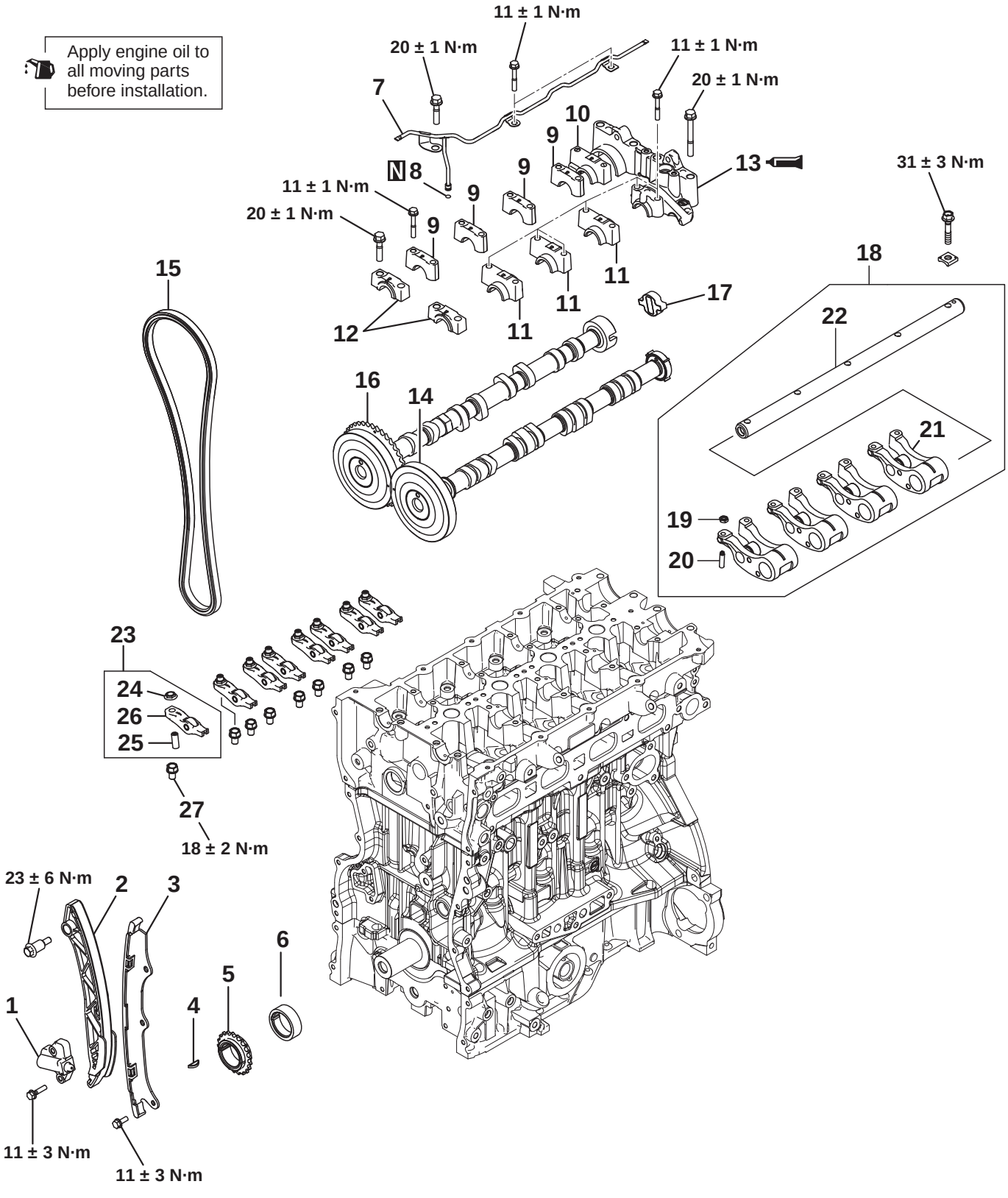

Removal steps

<<A>> >>J<< 1. Timing chain tensioner
>>J<< 2. Tensioner lever
>>J<< 3. Timing chain guide

Removal steps (Continued)

>>J<< 4. Crankshaft key
>>I<< 5. Crankshaft sprocket
>>I<< 6. Crankshaft spacer

Removal steps (Continued)

7. Inlet oil pipe
8. O-ring
9. Right A camshaft bearing cap
10. Right B camshaft bearing cap
11. Left camshaft bearing cap
12. Front camshaft bearing cap
13. Rear camshaft bearing cap
14. Inlet camshaft
15. Timing chain
16. Exhaust camshaft
17. Coupling
18. Rocker arm and shaft assembly
19. Nut
20. Adjusting screw
21. Inlet rocker arm
22. Inlet rocker shaft
23. Exhaust rocker arm assembly
24. Nut
25. Adjusting screw
26. Rocker arm
27. Pivot bolt

<4N14>

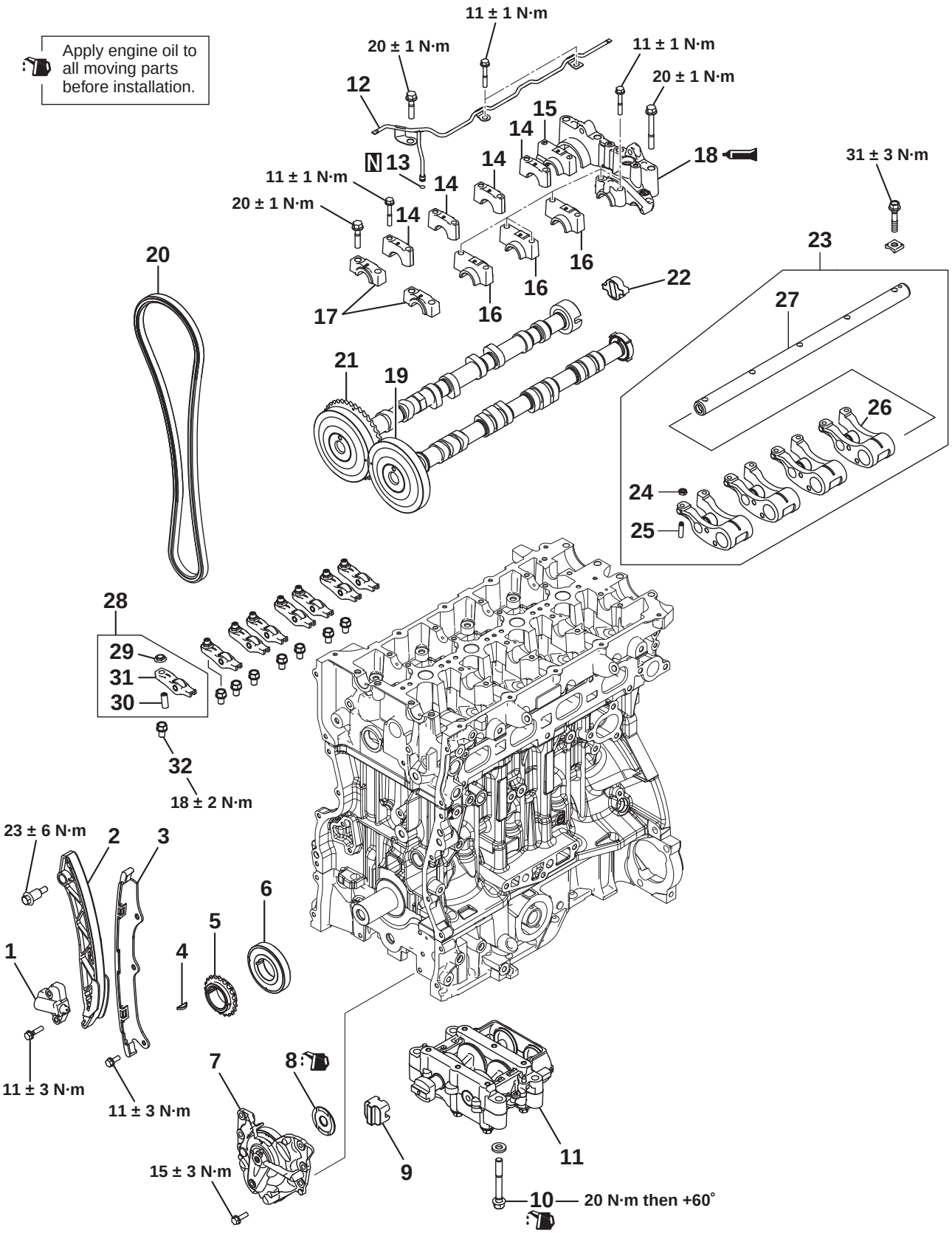

Removal steps

<<A>> >>J<< 1. Timing chain tensioner
>>J<< 2. Tensioner lever

Removal steps (Continued)

>>J<< 3. Timing chain guide
>>J<< 4. Crankshaft key

Removal steps (Continued)

>>H<< 5. Crankshaft sprocket
>>G<< 6. Crankshaft gear
>>G<< 7. Balancer shaft drive housing and gear
>>G<< 8. Trust plate
>>G<< 9. Coupling
>>F<< 10. Balancer unit bolt
>>F<< 11. Balancer unit*
12. Inlet oil pipe
13. O-ring
<<B>> >>E<< 14. Right A camshaft bearing cap
<<B>> >>E<< 15. Right B camshaft bearing cap
<<B>> >>E<< 16. Left camshaft bearing cap
<<B>> >>E<< 17. Front camshaft bearing cap
<<B>> >>E<< 18. Rear camshaft bearing cap
>>D<< 19. Inlet camshaft
>>D<< 20. Timing chain
>>D<< 21. Exhaust camshaft
>>C<< 22. Coupling
<<C>> 23. Rocker arm and shaft assembly
24. Nut
25. Adjusting screw
26. Inlet rocker arm
27. Inlet rocker shaft
28. Exhaust rocker arm assembly
29. Nut
30. Adjusting screw
31. Rocker arm
32. Pivot bolt

*NOTE: *: The balancer unit must not be overhauled for the assembly assurance.*

REMOVAL SERVICE POINTS

<<A>> TIMING CHAIN TENSIONER REMOVAL

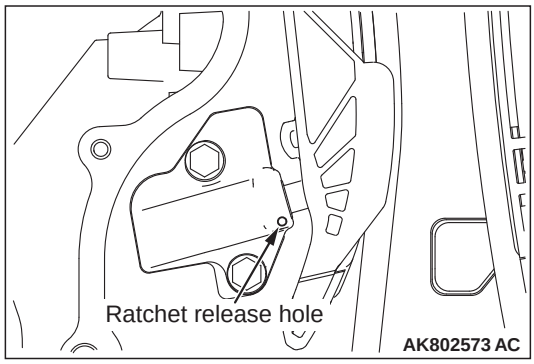

1. Push the tensioner lever by hand and push in the plunger of the timing chain tensioner until it hits the bottom. Then, insert a hard wire (piano wire or the like) of ϕ1.0 or hexagonal bar wrench (1.0 mm) into the fixing hole of the plunger.

⚠ WARNING

If the timing chain tensioner set pin (fixed wire) suddenly comes off the timing chain tensioner, it is very dangerous because the plunger jumps out.

2. Remove the timing chain tensioner.

NOTE: At that time, the timing chain cannot be removed.

<<B>> RIGHT "A" CAMSHAFT BEARING CAP / RIGHT "B" CAMSHAFT BEARING CAP / LEFT CAMSHAFT BEARING CAP / FRONT CAMSHAFT BEARING CAP / REAR CAMSHAFT BEARING CAP REMOVAL

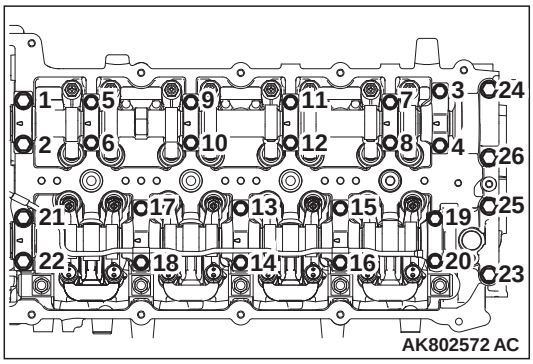

⚠ CAUTION

Loosing the installation bolts for the camshaft bearing cap at the same time causes the valve spring force, which makes the installation bolts jump out, resulting in the damaged threads. Gradually loosen them four or five times, not in one time.

Remove the installation bolts of each camshaft bearing cap in the order shown in the illustration.

<<C>> ROCKER ARM AND SHAFT ASSEMBLY REMOVAL

⚠ CAUTION

Never overhaul the rocker arm and the rocker shaft assembly.

INSTALLATION SERVICE POINTS

>>A<< TAPER PLUG INSTALLATION

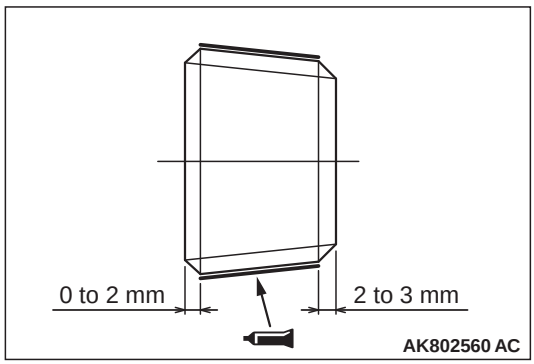

If the taper plug is reused, apply the sealant to the portion shown in the illustration.

Specified sealant:
Three bond 1215, Three bond 1212D or equivalent

>>B<< O-RING / OIL FEEDER CONTROL VALVE (OCV) INSTALLATION

⚠ CAUTION

- **The O-ring must not be reused.**
- **Wind non-adhesive tape (seal tape, etc.) around the notch of the oil passage of the oil feeder control valve before installing the O-ring to prevent damage. Damage to the O-ring causes oil leakage.**

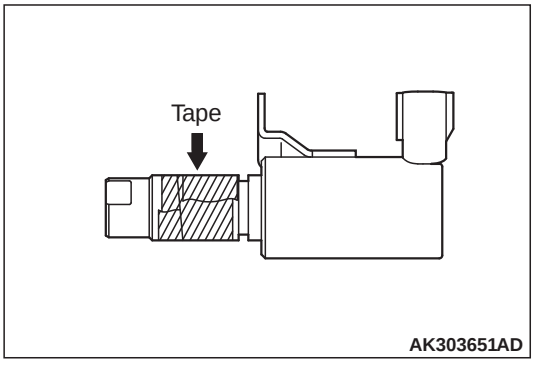

1. Apply a small amount of engine oil to the O-ring of the oil feeder control valve.
2. Install the oil feeder control valve to the cylinder head.
3. Tighten the oil feeder control bolts to the specified torque of 10 ± 2 N·m.

>>C<< COUPLING INSTALLATION

Apply oil to the entire coupling to install the coupling to the slit portion of the exhaust camshaft rear end.

NOTE: Do not install it wrongly. Do not drop it.

>>D<< EXHAUST CAMSHAFT / TIMING CHAIN / INLET CAMSHAFT INSTALLATION

1. Install the exhaust camshaft.

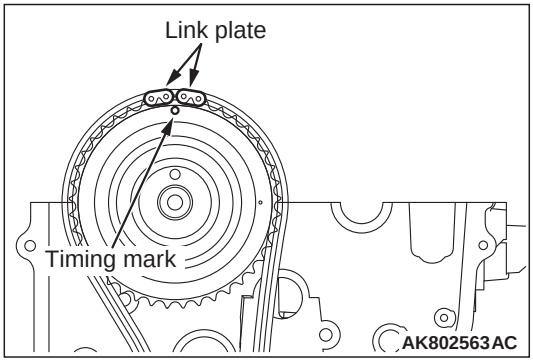

2. Align the timing chain link plate with the timing mark of the exhaust camshaft to loop the timing chain.

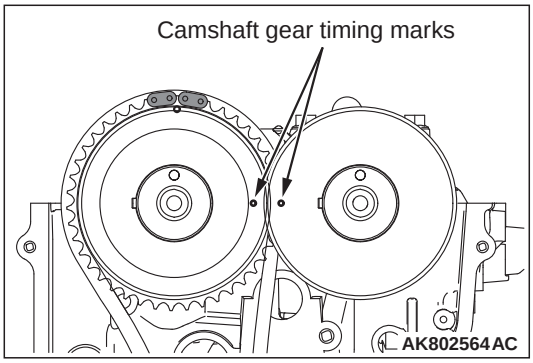

3. Install the inlet camshaft, Align the timing marks on each camshaft gear to install them.

>>E<< REAR CAMSHAFT BEARING CAP / FRONT CAMSHAFT BEARING CAP / LEFT CAMSHAFT BEARING CAP / RIGHT "B" CAMSHAFT BEARING CAP / RIGHT "A" CAMSHAFT BEARING CAP INSTALLATION

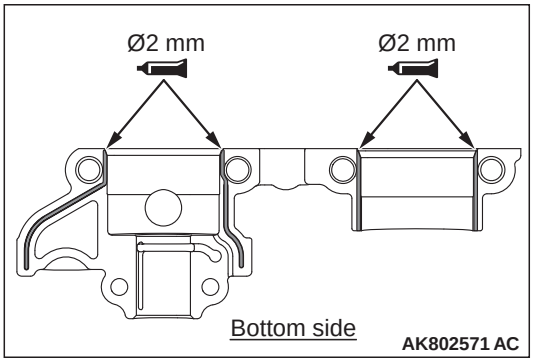

1. Apply the liquid gasket to the rear camshaft bearing cap, as shown in the illustration.

Specified sealant:
Three bond 1217G or equivalent

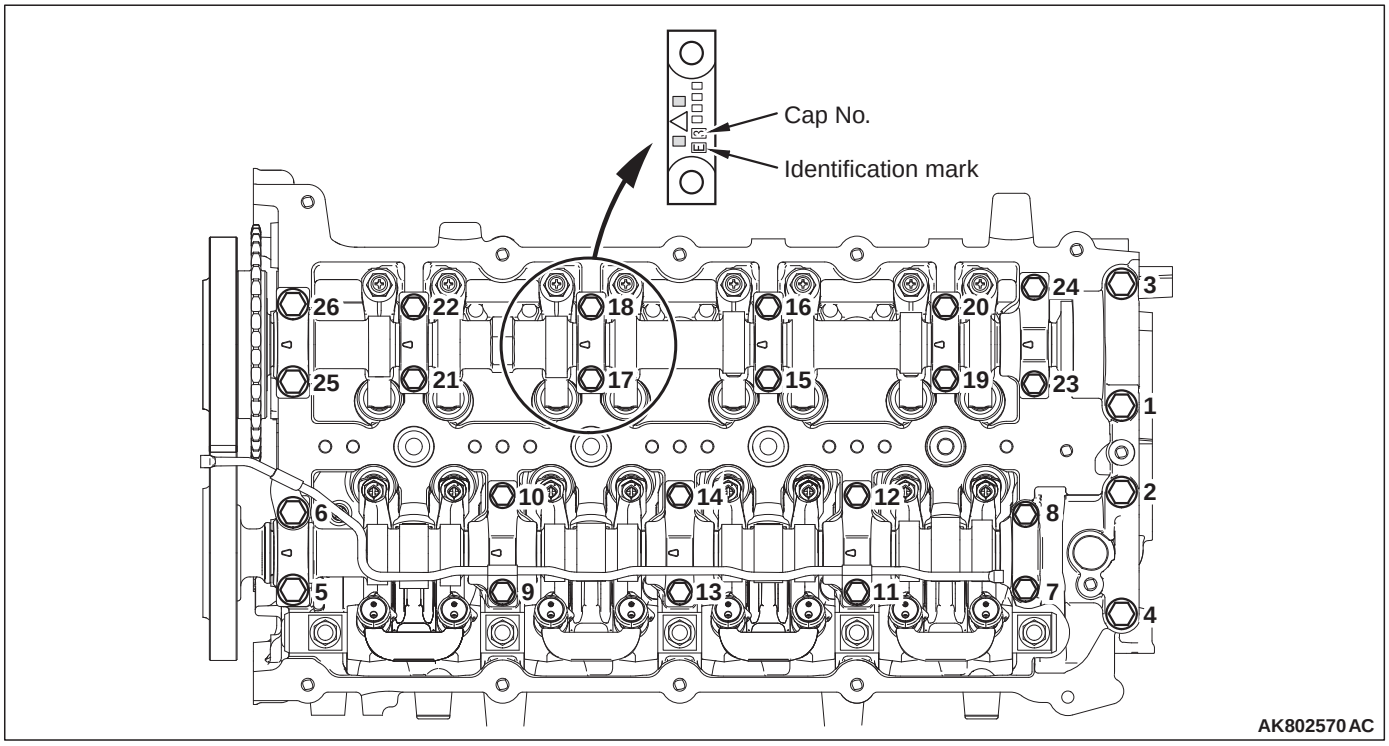

2. Install each camshaft bearing cap to the cylinder head.

   NOTE: Check the identification codes regarding the cap No. Check whether it is for the inlet side or the exhaust side.

   Identification mark (stamped on each camshaft bearing cap)
   I: Inlet side
   E: Exhaust side

3. Install a new O-ring to the oil pipe.
4. Install the oil pipe to the camshaft bearing cap.
5. Tighten the camshaft bearing cap bolts to the specified torque in the order shown in the illustration.

   Specified torque
   M6: 11 ± 1 N·m
   M8: 20 ± 1 N·m

>>F<< BALANCER UNIT / BALANCER UNIT BOLT INSTALLATION

1. Apply the appropriate and minimum amount of engine oil to the balance unit bolt thread portion and the lower portion of the flange.

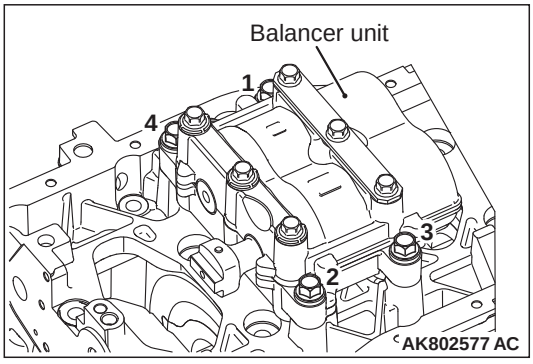

2. Install the balancer unit to the lower crankcase and tighten them to the tighten torque of 20 N·m in the order shown in the illustration.

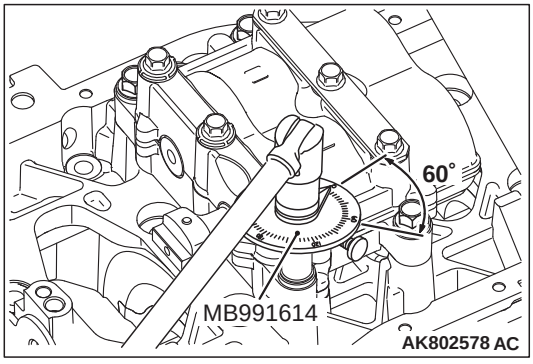

3. Use Special Tool Angle Gauge (MB991614) to tighten them an additional 60°.

>>G<< COUPLING / TRUST PLATE / BALANCER SHAFT DRIVE HOUSING AND GEAR / CRANKSHAFT GEAR INSTALLATION

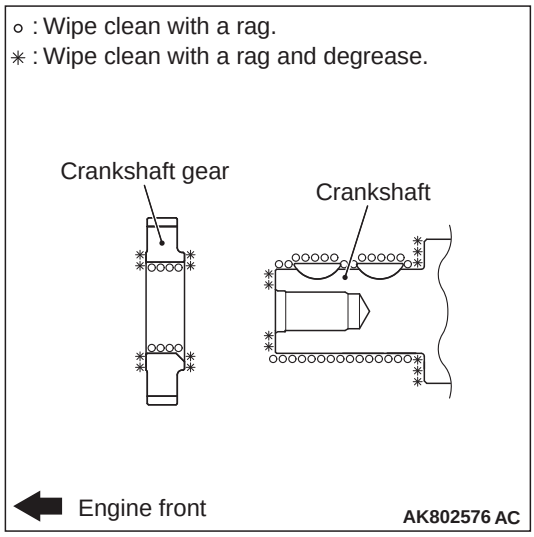

1. Use a rag to wipe off the dirt on the crankshaft gear and the crankshaft. Remove the grease on the portion shown in the illustration.

NOTE: Remove the grease in order that adhered oil cannot decrease the wear coefficient of the pressed area.

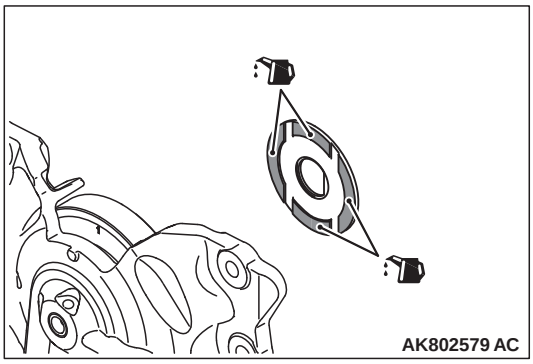

2. Apply the appropriate and minimum amount of engine oil to the thrust plate, as shown in the illustration.
3. Install all of these so that the thrust plate face where the engine oil is applied can face toward the balancer shaft drive housing and gear.

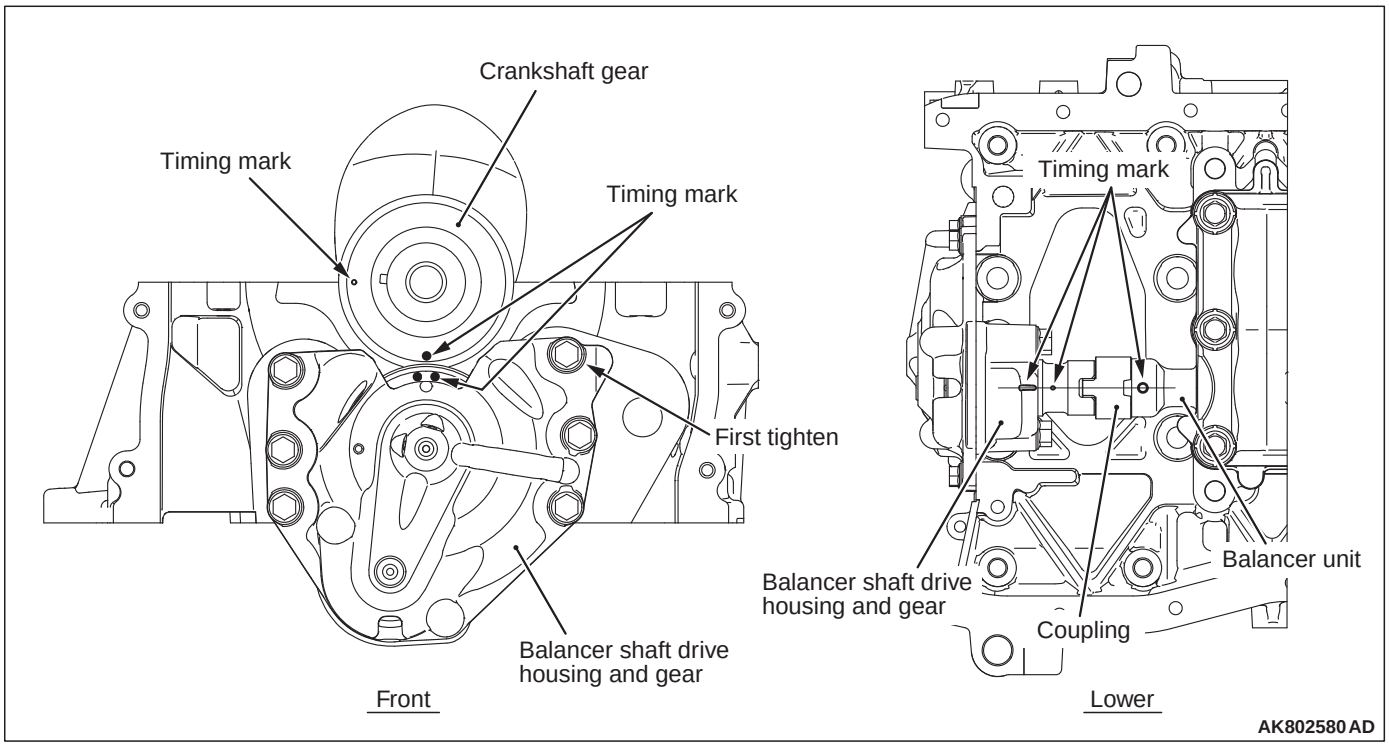

4. Install all of these aligning all the timing marks.
5. When tightening the balancer shaft drive housing and the gear, tighten the bolt shown in the illustration first.

>>H<< CRANKSHAFT SPROCKET INSTALLATION

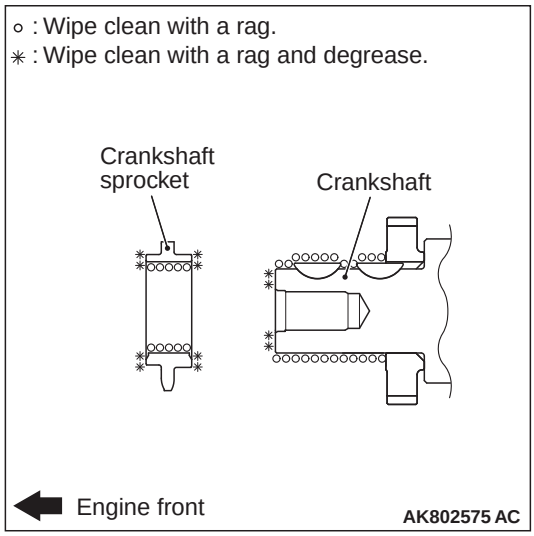

Use a rag to wipe off the dirt on the crankshaft sprocket and the crankshaft. Remove the grease on the portion shown in the illustration.

NOTE: Remove the grease in order that adhered oil cannot decrease the wear coefficient of the pressed area.

>>I<< CRANKSHAFT SPACER / CRANKSHAFT SPROCKET INSTALLATION

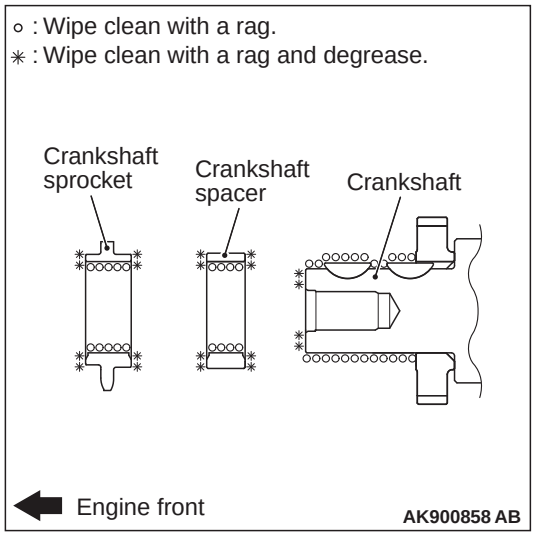

Use a rag to wipe off the dirt on the crankshaft sprocket, crankshaft spacer and the crankshaft. Remove the grease on the portion shown in the illustration.

NOTE: Remove the grease in order that adhered oil cannot decrease the wear coefficient of the pressed area.

>>J<< CRANKSHAFT KEY / TIMING CHAIN GUIDE / TENSIONER LEVER / TIMING CHAIN TENSIONER INSTALLATION

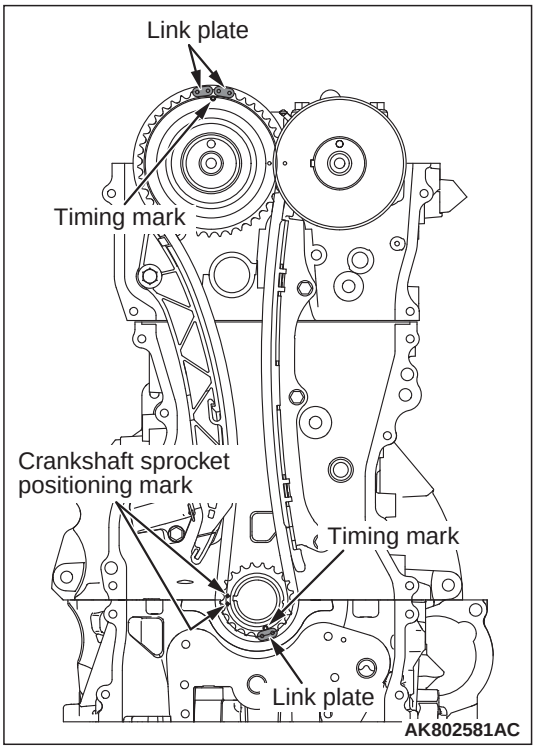

1. Install all of these so that the centres of two location marks of the crankshaft sprocket can align with the border line between the cylinder block and the lower crank case.
2. Install the crankshaft key.

   NOTE: This position becomes the No.1 cylinder compression top dead centre finally.
3. Align the timing mark of the camshaft and the timing mark of the crankshaft sprocket with the link plate of the timing chain to install the timing chain.
4. Tighten the chain guide to the specified torque of 11 ± 3 N·m.
5. Tighten the tensioner lever to the specified torque of 24 ± 3 N·m. After the installation, check that the turn direction has flexibility at the bolt support point.
6. Tighten the timing chain tensioner to the specified torque of 11 ± 3 N·m.

⚠ ***WARNING***

If the timing chain tensioner set pin (fixed wire) suddenly comes off the timing chain tensioner, it is very dangerous because the plunger jumps out.

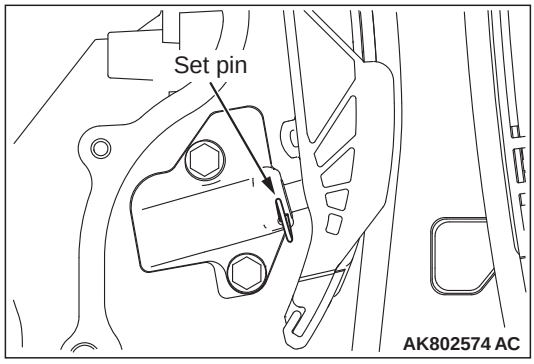

7. After that, pull out the set pin (fixed wire) to give tension to the timing chain.

   Check that the timing chain tensioner plunger fits securely into the tensioner lever groove.

   Check that the timing chain link securely engages with the gear without going beyond.

   Check that the timing chain does not deviate from the chain guide and the tensioner lever chain running surface.
8. Check that each timing mark aligns with two link plates of the timing chain.

INSPECTION

M1113038900054

VALVE CLEARANCE ADJUSTMENT

⚠ **CAUTION**

The crankshaft should always be rotated clockwise.

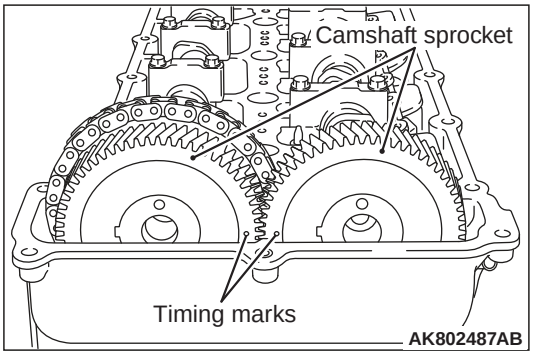

1. Align the camshaft sprocket timing marks and set the No. 1 cylinder at compression stroke top dead centre.

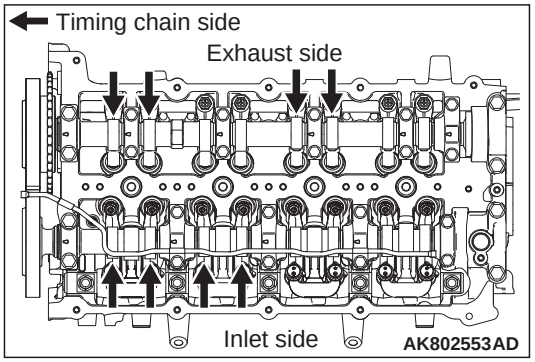

2. For the portions with the arrows shown below, measure and adjust the valve clearances by using the following procedures.

<Sides except inlet side without MIVEC>

1.)Using a thickness gauge, adjust the clearance between the cam and the roller.

Standard value (cold engine):
Inlet valve: 0.08 ± 0.03 mm
Exhaust valve: 0.16 ± 0.03 mm

⚠ CAUTION

Pay special attention that the tightening torque is not beyond this valve. If the tightening torque is beyond the valve, the valve stem would possibly bend.

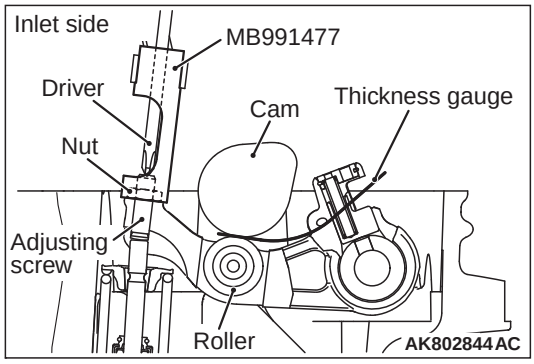

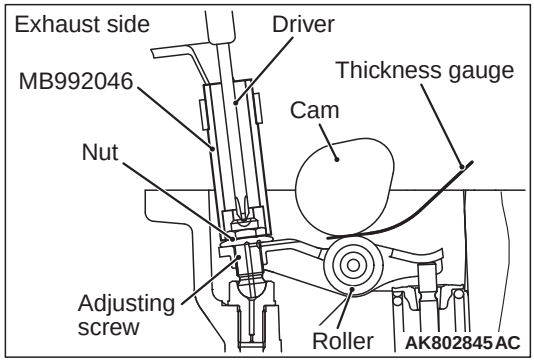

2.)While holding the adjusting screw with a screwdriver to prevent it from turning, tighten the lock nut to the specified torque using the special tool, valve adjusting socket.

Special tool (valve adjusting socket):
Inlet side: MB991477
Exhaust side: MB992046

Tightening torque:
Inlet side: 9 ± 1 N·m
Exhaust side: 9.8 ± 1 N·m

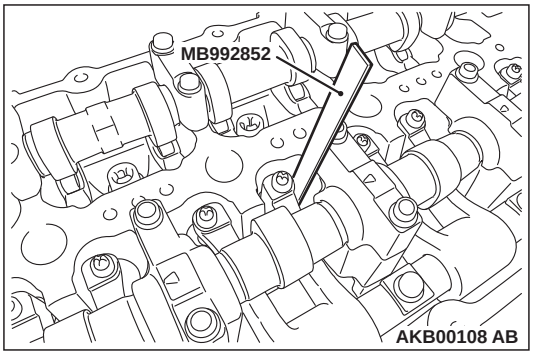

<Inlet side without MIVEC>

1.) Insert the special tool valve adjusting feeling gauge (MB992852) between the valve stem and the adjusting screw.

2). Adjust the clearance between the valve stem and adjusting screw to be within the standard value.

Standard value: 0.14 ± 0.03 mm

⚠ CAUTION

Pay special attention that the tightening torque is not beyond this valve. If the tightening torque is beyond the valve, the valve stem would possibly bend.

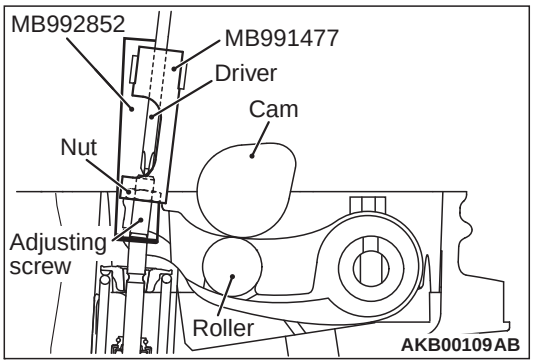

3.)While holding the adjusting screw with a screwdriver to prevent it from turning, tighten the lock nut to the specified torque using the special tool valve adjusting socket (MB991477).

Tightening torque: 9 ± 1 N·m

3. Turn the crankshaft 360° clockwise to bring No. 4 cylinder to the compression stroke top dead centre position.

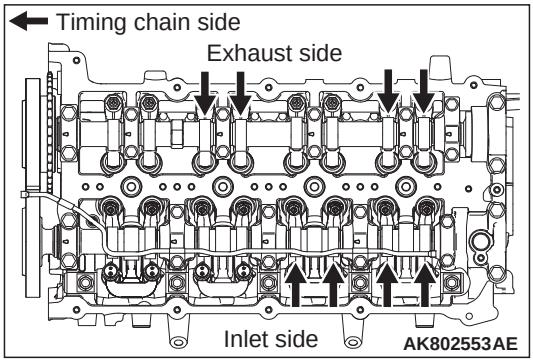

4. For the portions with the arrows shown below, measure and adjust the valve clearances by using the same procedures as ones in the Step 2.

CAMSHAFT INSPECTION

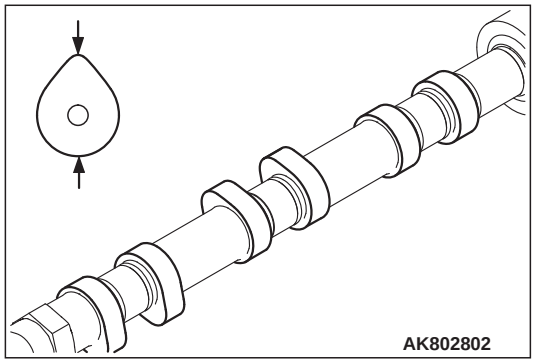

Measure the cam height (cam long diameter). If it goes beyond the limit value, replace the camshaft.

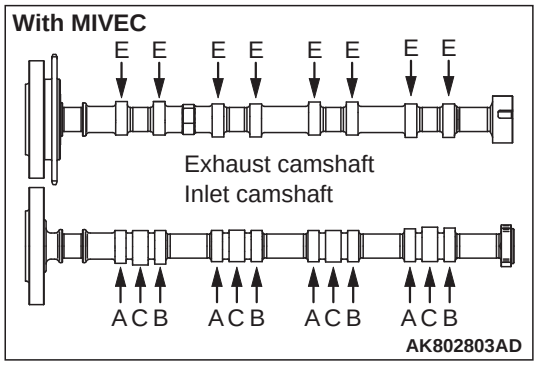

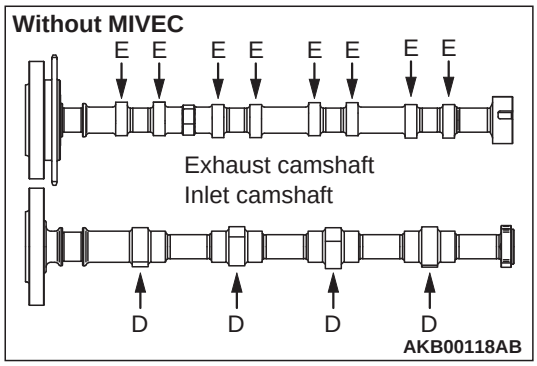

Cam			standard mm	Limit mm
Inlet <with MIVEC>	Low A	A	34.685	34.185
	Low B	B	36.414	35.914
	High	C	36.790	36.290
Inlet <without MIVEC>		D	36.414	35.914
Exhaust		E	36.669	36.169

<Deleted>

CAMSHAFT

REMOVAL AND INSTALLATION

M1113026901124

<MIVEC>

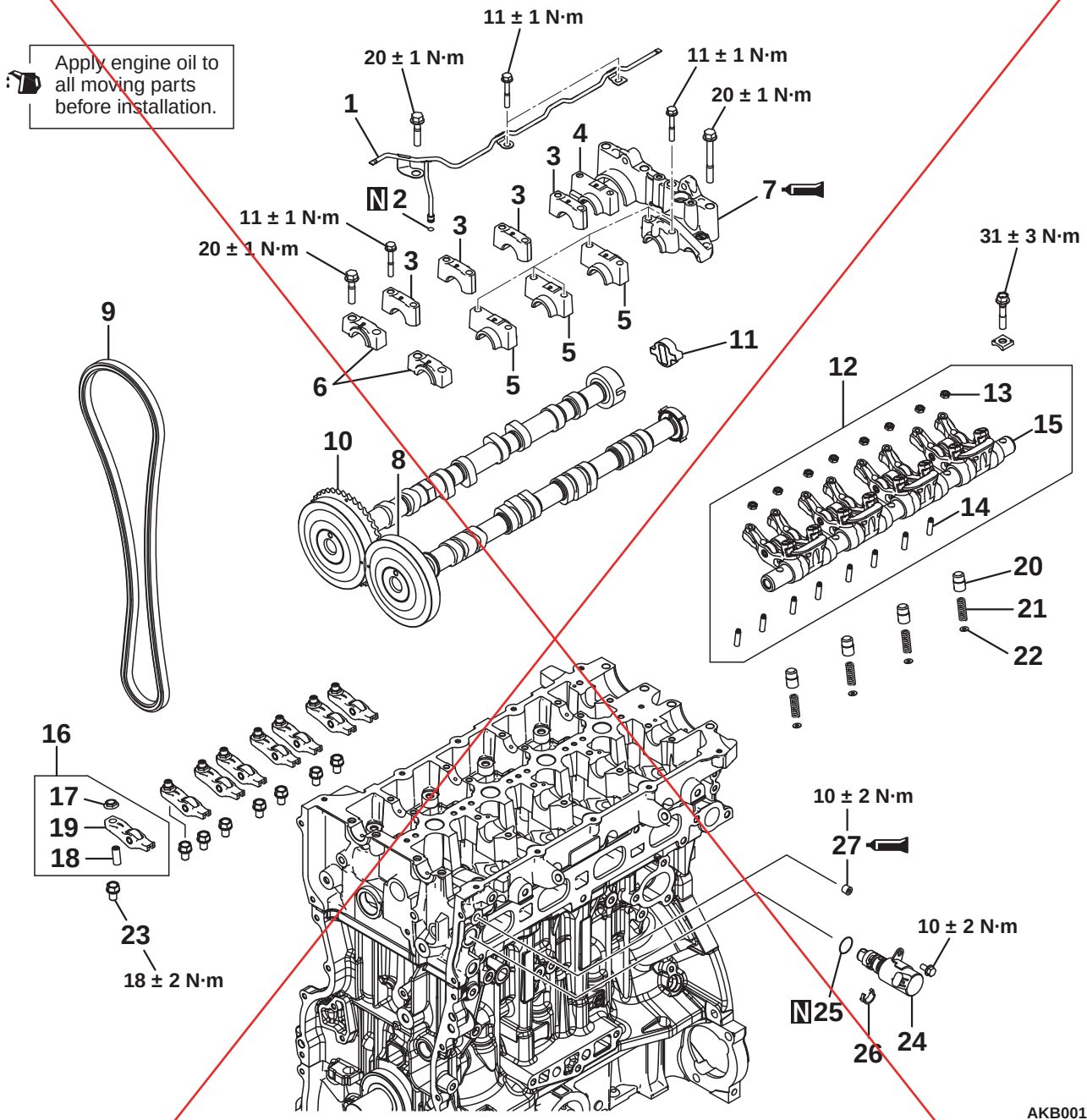

Removal steps

1. Inlet oil pipe
2. O-ring

<<A>> >>E<< 3. Right A camshaft bearing cap
<<A>> >>E<< 4. Right B camshaft bearing cap
<<A>> >>E<< 5. Left camshaft bearing cap
<<A>> >>E<< 6. Front camshaft bearing cap
<<A>> >>E<< 7. Rear camshaft bearing cap
>>D<< 8. Inlet camshaft
>>D<< 9. Timing chain
>>D<< 10. Exhaust camshaft

Removal steps (Continued)

<<B>> >>C<< 11. Coupling
12. Rocker arm and shaft assembly
13. Nut
14. Adjusting screw
15. Rocker arm and shaft
16. Exhaust rocker arm assembly
17. Nut
18. Adjusting screw
19. Rocker arm
20. Piston (for T-lever)

<Deleted>

Removal steps (Continued)

21. Piston spring
22. Piston spring seat
23. Pivot bolt
>>B<< 24. Oil feeder control valve (OCV)
25. O-ring
26. OCV filter
>>A<< 27. Taper plug

< Except MIVEC>

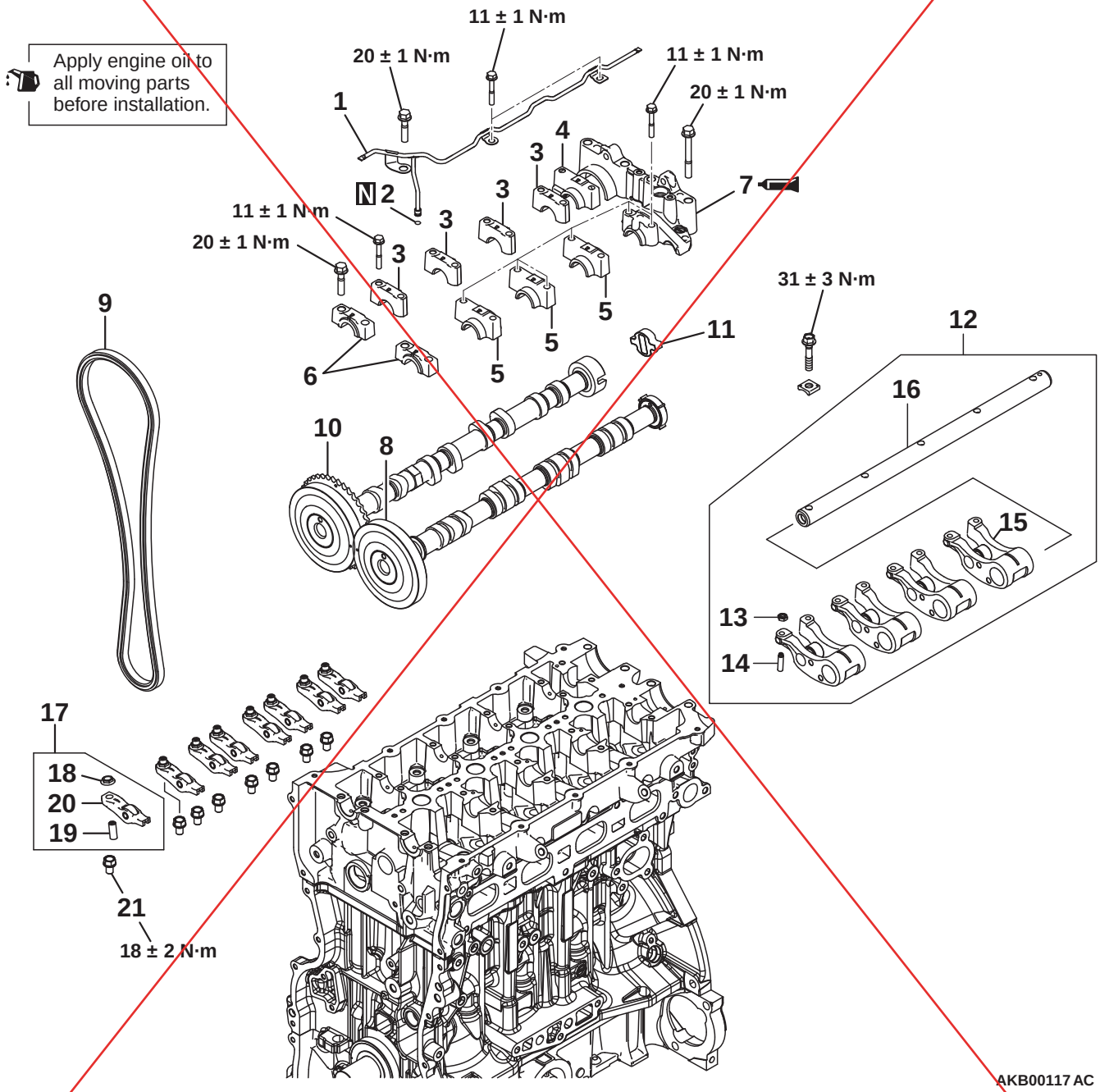

AKB00117 AC

Removal steps

1. Inlet oil pipe
2. O-ring
<<A>> >>E<< 3. Right A camshaft bearing cap
<<A>> >>E<< 4. Right B camshaft bearing cap
<<A>> >>E<< 5. Left camshaft bearing cap

Removal steps (Continued)

<<A>> >>E<< 6. Front camshaft bearing cap
<<A>> >>E<< 7. Rear camshaft bearing cap
>>D<< 8. Inlet camshaft
>>D<< 9. Timing chain
>>D<< 10. Exhaust camshaft

Removal steps (Continued)

>>C<< 11. Coupling
<<B>> 12. Rocker arm and shaft assembly
13. Nut
14. Adjusting screw
15. Inlet rocker arm
16. Inlet rocker shaft
17. Exhaust rocker arm assembly
18. Nut
19. Adjusting screw
20. Rocker arm
21. Pivot bolt

REMOVAL SERVICE POINTS

<<A>> RIGHT "B" CAMSHAFT / RIGHT "A" CAMSHAFT BEARING CAP / LEFT CAMSHAFT BEARING CAP / FRONT CAMSHAFT BEARING CAP / REAR CAMSHAFT BEARING CAP REMOVAL

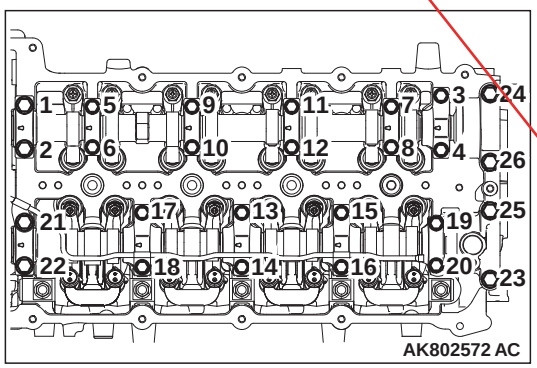

⚠ CAUTION
Loosing the installation bolts for the camshaft bearing cap at the same time causes the valve spring force, which makes the installation bolts jump out, resulting in the damaged threads. Gradually loosen them four or five times, not in one time.
Remove the installation bolts of each camshaft bearing cap in the order shown in the illustration.

<<B>> ROCKER ARM AND ROCKER SHAFT ASSEMBLY

⚠ CAUTION
Never overhaul the rocker arm and the rocker shaft assembly.

INSTALLATION SERVICE POINTS

>>A<< TAPER PLUG INSTALLATION

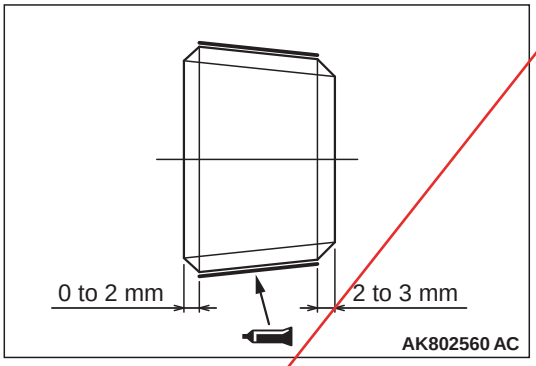

If the taper plug is reused, apply the sealant to the portion shown in the illustration.

Specified sealant:
Three bond 1215, Three bond 1212D or equivalent

>>B<< O-RING / OIL FEEDER CONTROL VALVE (OCV) INSTALLATION

⚠ CAUTION
- **The O-ring must not be reused.**
- **Wind non-adhesive tape (seal tape, etc.) around the notch of the oil passage of the oil feeder control valve before installing the O-ring to prevent damage. Damage to the O-ring causes oil leakage.**

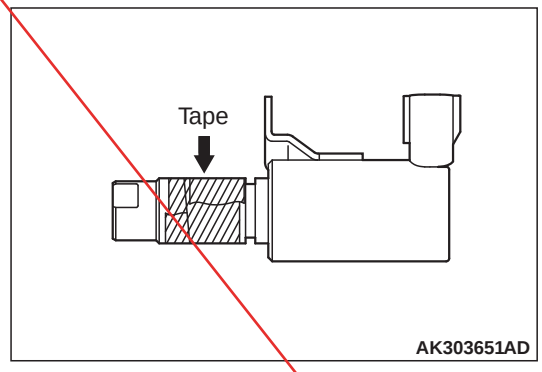

1. Apply a small amount of engine oil to the O-ring of the oil feeder control valve.
2. Install the oil feeder control valve to the cylinder head.
3. Tighten the oil feeder control bolts to the specified torque of 10 ± 2 N·m.

>>C<< COUPLING INSTALLATION

Apply oil to the entire coupling to install the coupling to the slit portion of the exhaust camshaft rear end.
NOTE: Do not install it wrongly. Do not drop it.

<Deleted>

>>D<< CAMSHAFT INLET / TIMING CHAIN / CAMSHAFT EXHAUST INSTALLATION

1. Install the exhaust camshaft.

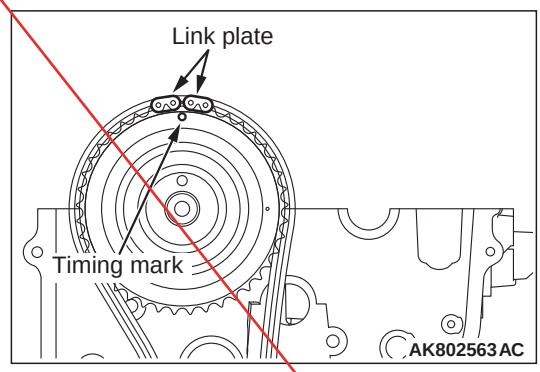

2. Align the timing chain link plate with the timing mark of the exhaust camshaft to loop the timing chain.

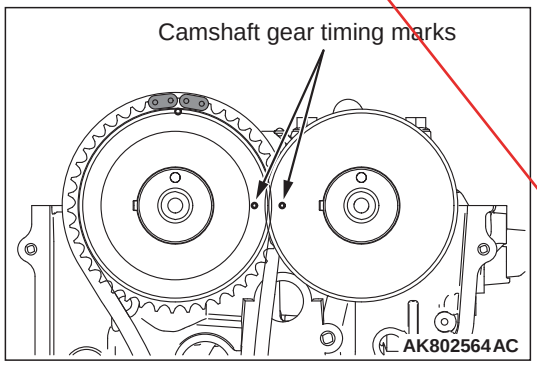

3. Install the inlet camshaft, Align the timing marks on each camshaft gear to install them.

>>E<< RIGHT "B" CAMSHAFT / RIGHT "A" CAMSHAFT BEARING CAP / LEFT CAMSHAFT BEARING CAP / FRONT CAMSHAFT BEARING CAP / REAR CAMSHAFT BEARING CAP INSTALLATION

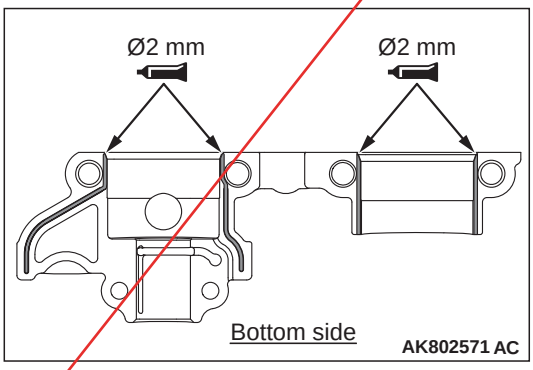

1. Apply the liquid gasket to the rear camshaft bearing cap, as shown in the illustration.

Specified sealant:
Three bond 1217G or equivalent

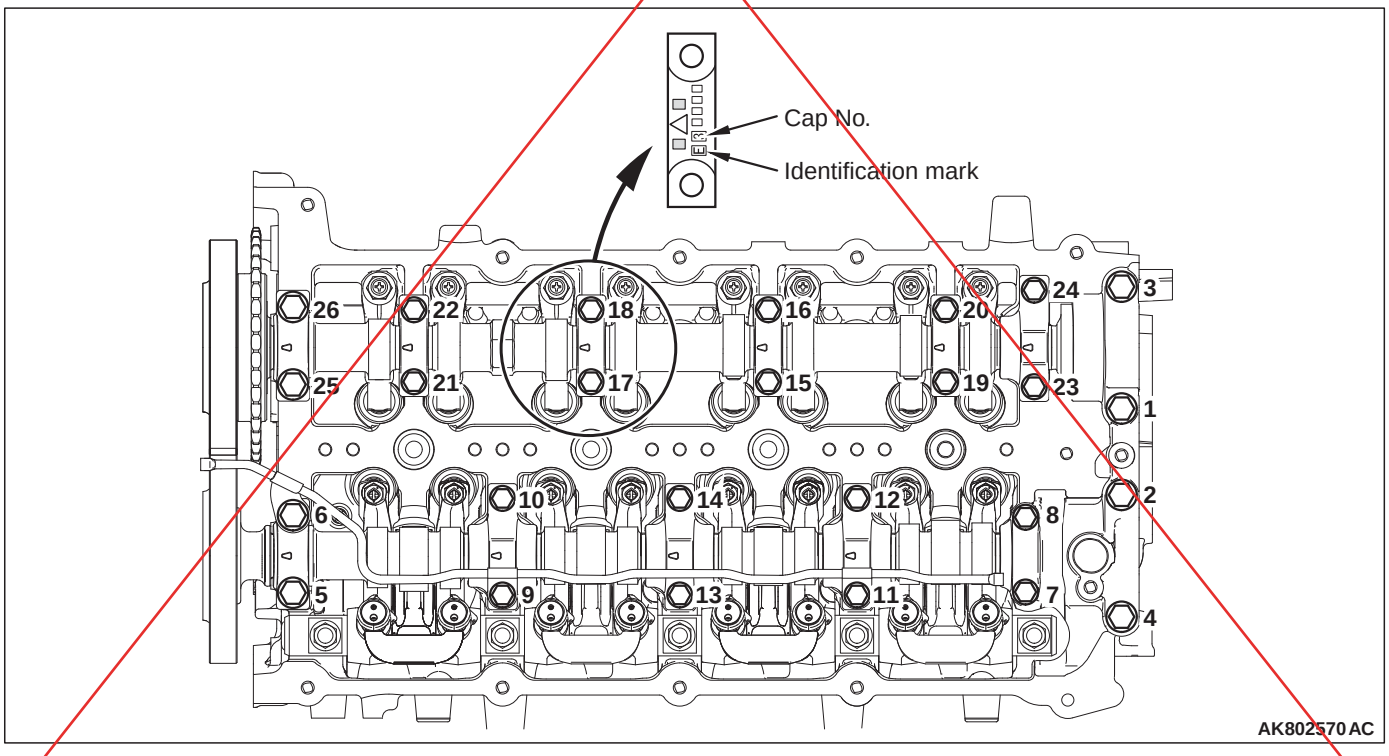

2. Install each camshaft bearing cap to the cylinder head.

NOTE: Check the identification codes regarding the cap No. Check whether it is for the inlet side or the exhaust side.

<Deleted>

Identification mark (stamped on each camshaft bearing cap)
I: Inlet side
E: Exhaust side

3. Install a new O- ring to the oil pipe.
4. Install the oil pipe to the camshaft bearing cap.
5. Tighten the camshaft bearing cap bolts to the specified torque in the order shown in the illustration.

Specified torque
M6: 11 ± 1 N·m
M8: 20 ± 1 N·m

INSPECTION

M1113027000949

CAMSHAFT

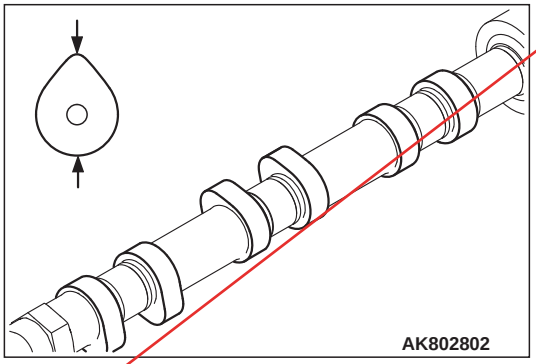

Measure the cam height (cam long diameter). If it goes beyond the limit value, replace the camshaft.

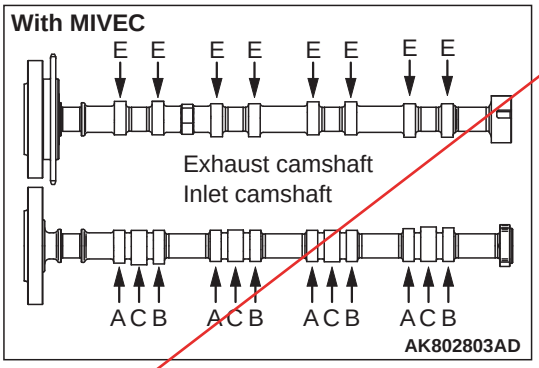

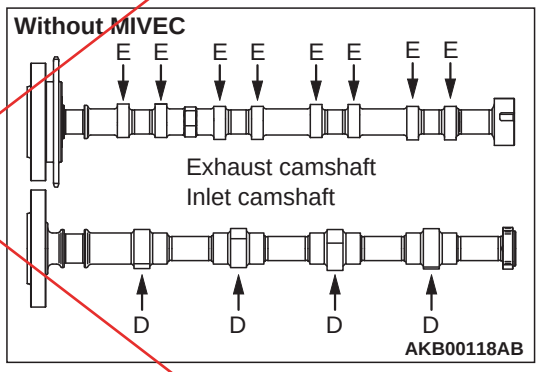

Cam			standard mm	Limit mm
Inlet <with MIVEC>	Low A	A	34.685	34.185
	Low B	B	36.414	35.914
	High	C	36.790	36.290
Inlet <without MIVEC>		D	36.414	35.914
Exhaust		E	36.669	36.169

<Correct> Attached sheet 11 (6/12 to 12/12)

Attached sheet 11 (1/12)

<Incorrect>

TIMING CHAIN

REMOVAL AND INSTALLATION

M1113026601394

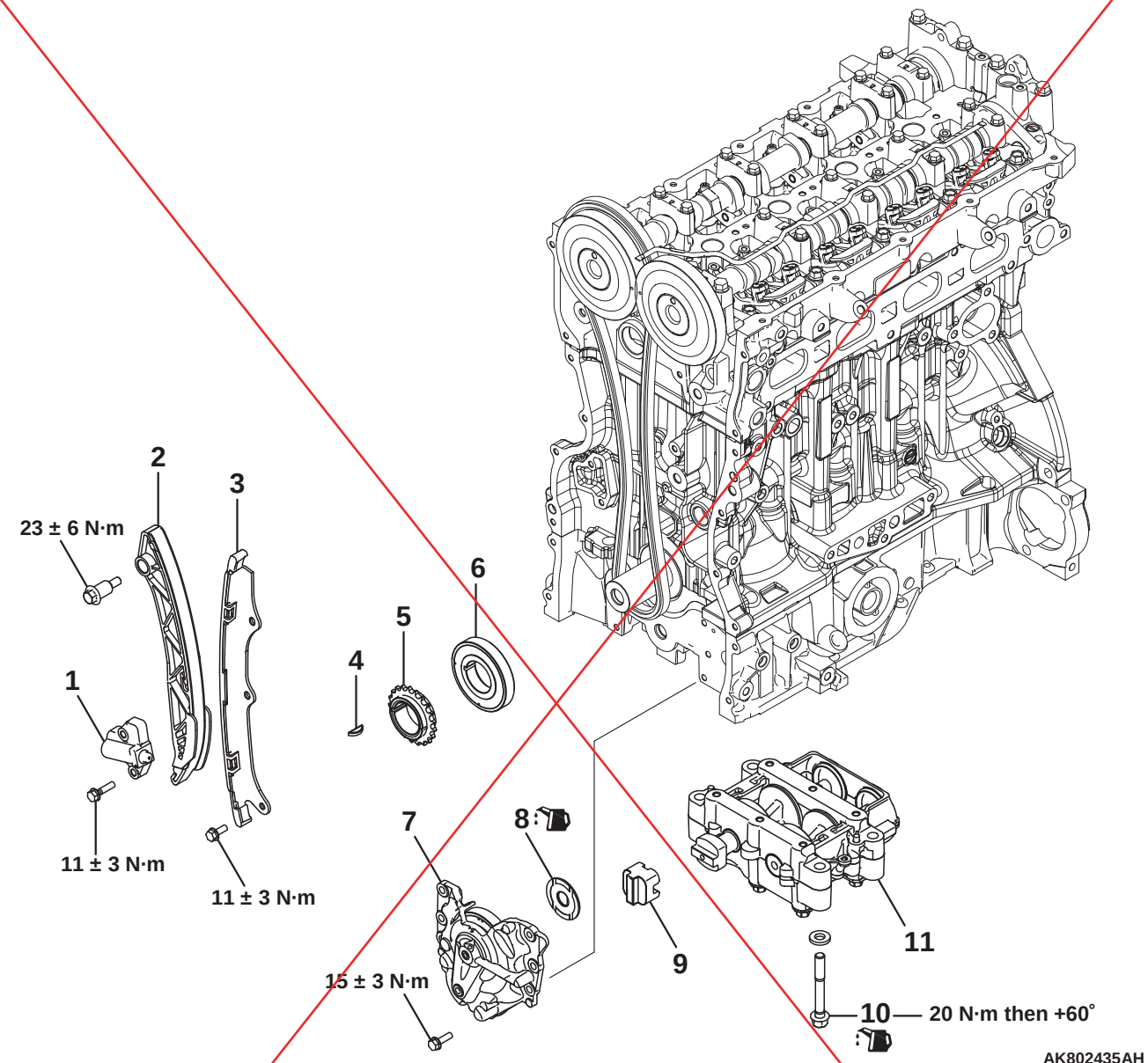

AK802435AH

Removal steps

<<A>>	>>D<<	1.	Timing chain tensioner
	>>D<<	2.	Tensioner lever
	>>D<<	3.	Timing chain guide
	>>D<<	4.	Crankshaft key
	>>C<<	5.	Crankshaft sprocket
	>>B<<	6.	Crankshaft gear
	>>B<<	7.	Balancer shaft drive housing and gear
	>>B<<	8.	Trust plate
	>>B<<	9.	Coupling
	>>A<<	10.	Balancer unit bolt
	>>A<<	11.	Balancer unit *1

*NOTE: *1: The balancer unit must not be overhauled for the assembly assurance.*

REMOVAL SERVICE POINT

<<A>> TIMING CHAIN TENSIONER REMOVAL

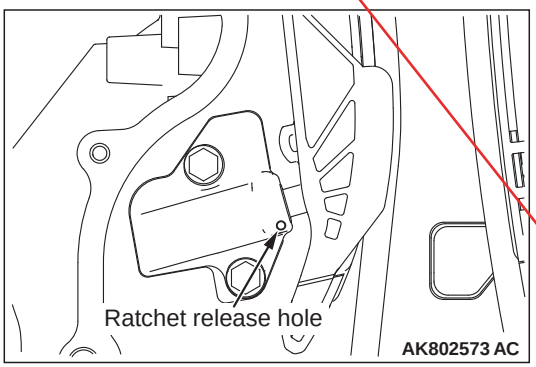

AK802573 AC

<Deleted>

1. Push the tensioner lever by hand and push in the plunger of the timing chain tensioner until it hits the bottom. Then, insert a hard wire (piano wire or the like) of ϕ1.0 or hexagonal bar wrench (1.0 mm) into the fixing hole of the plunger.

⚠ WARNING

If the timing chain tensioner set pin (fixed wire) suddenly comes off the timing chain tensioner, it is very dangerous because the plunger jumps out.

2. Remove the timing chain tensioner.

NOTE: At that time, the timing chain cannot be removed.

INSTALLATION SERVICE POINTS

>>A<< BALANCER UNIT / BALANCER UNIT BOLT INSTALLATION

1. Apply the appropriate and minimum amount of engine oil to the balance unit bolt thread portion and the lower portion of the flange.

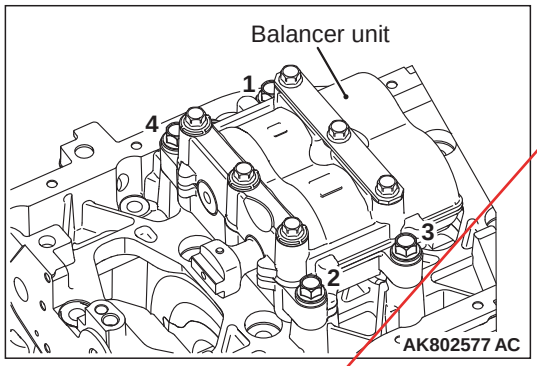

2. Install the balancer unit to the lower crankcase and tighten them to the tighten torque of 20 N·m in the order shown in the illustration.

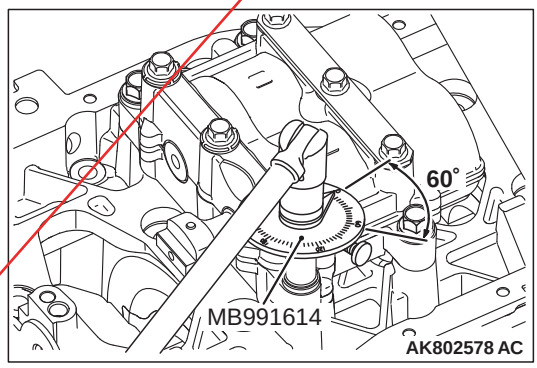

3. Use Special Tool Angle Gauge (MB991614) to tighten them an additional 60°.

>>B<< BALANCER SHAFT DRIVE HOUSING AND GEAR / COUPLING / TRUST PLATE / CRANKSHAFT GEAR INSTALLATION

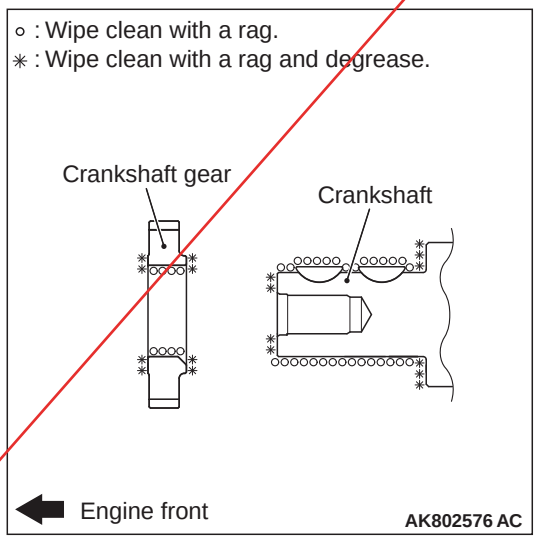

1. Use a rag to wipe off the dirt on the crankshaft gear and the crankshaft. Remove the grease on the portion shown in the illustration.

NOTE: Remove the grease in order that adhered oil cannot decrease the wear coefficient of the pressed area.

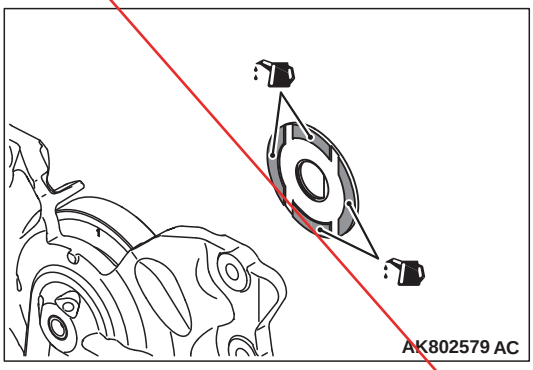

2. Apply the appropriate and minimum amount of engine oil to the thrust plate, as shown in the illustration.
3. Install all of these so that the thrust plate face where the engine oil is applied can face toward the balancer shaft drive housing & gear.

<Deleted>

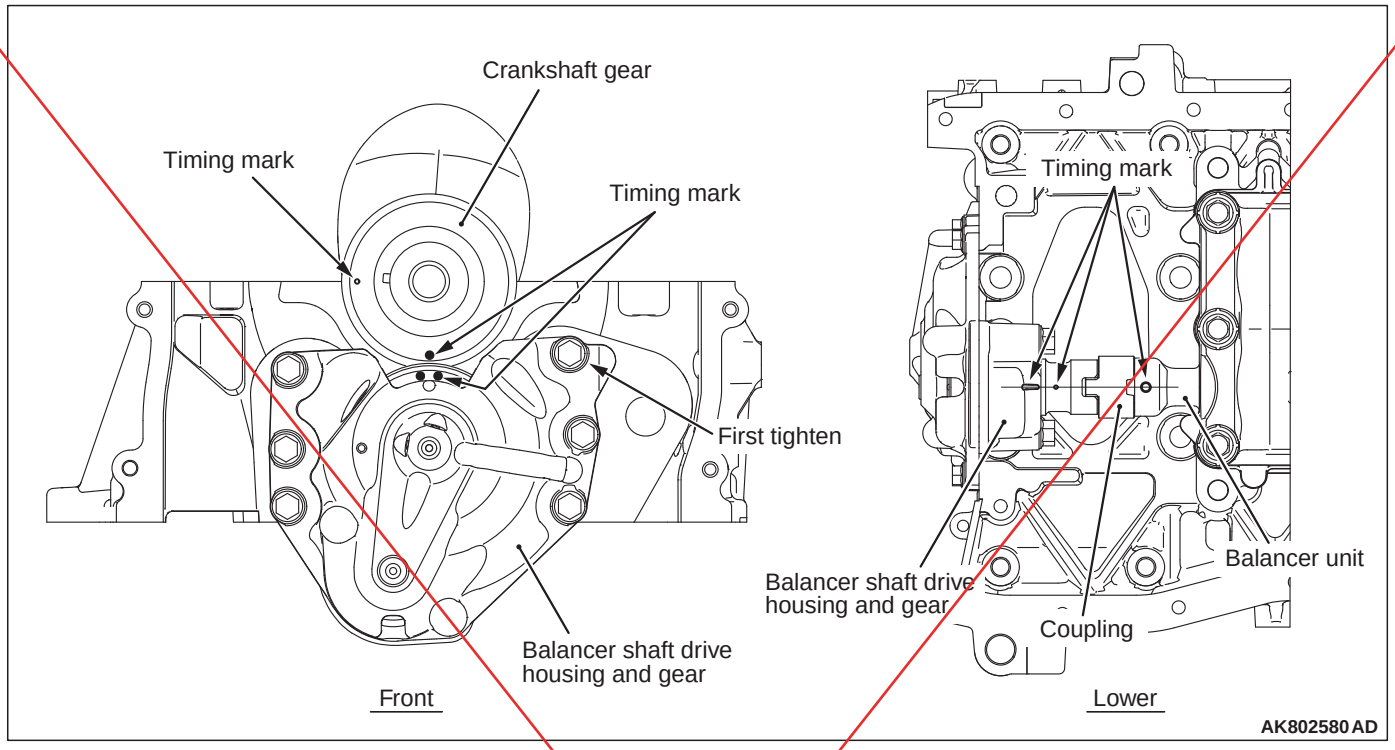

4. Install all of these aligning all the timing marks.
5. When tightening the balancer shaft drive housing and the gear, tighten the bolt shown in the illustration first.

>>C<< CRANKSHAFT SPROCKET INSTALLATION

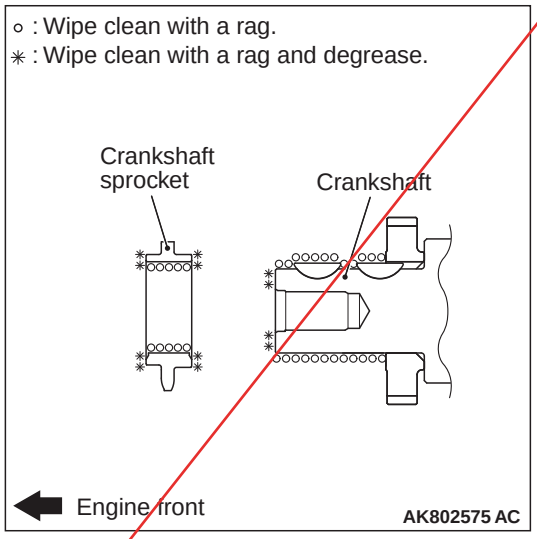

Use a rag to wipe off the dirt on the crankshaft sprocket and the crankshaft. Remove the grease on the portion shown in the illustration.

NOTE: Remove the grease in order that adhered oil cannot decrease the wear coefficient of the pressed area.

>>D<< CRANKSHAFT KEY / TIMING CHAIN GUIDE / TENSIONER LEVER / TIMING CHAIN TENSIONER INSTALLATION

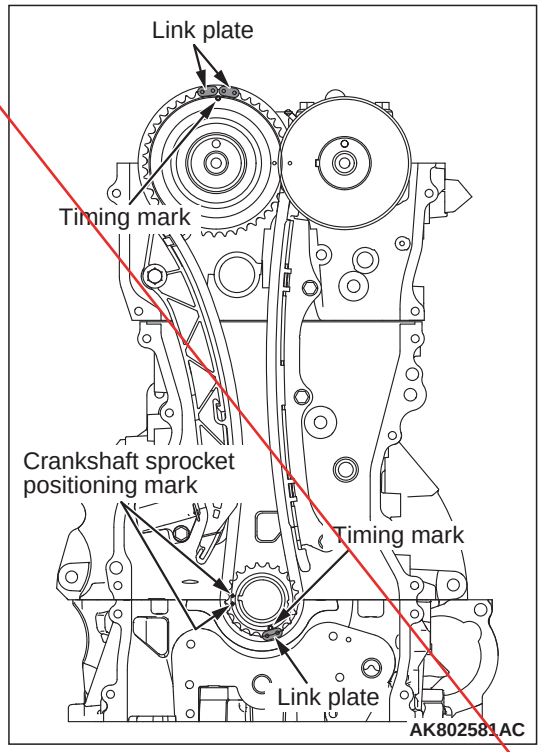

1. Install all of these so that the centres of two location marks of the crankshaft sprocket can align with the border line between the cylinder block and the lower crank case.
2. Install the crankshaft key.

NOTE: This position becomes the No.1 cylinder compression top dead centre finally.

3. Align the timing mark of the camshaft and the timing mark of the crankshaft sprocket with the link plate of the timing chain to install the timing chain.
4. Tighten the chain guide to the specified torque of 11 ± 3 N·m.
5. Tighten the tensioner lever to the specified torque of 24 ± 3 N·m. After the installation, check that the turn direction has flexibility at the bolt support point.
6. Tighten the timing chain tensioner to the specified torque of 11 ± 3 N·m.

⚠ *WARNING*

If the timing chain tensioner set pin (fixed wire) suddenly comes off the timing chain tensioner, it is very dangerous because the plunger jumps out.

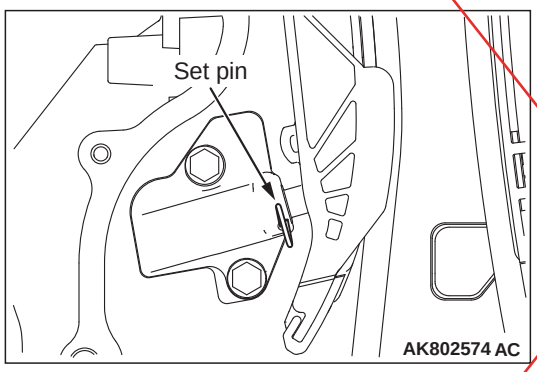

7. After that, pull out the set pin (fixed wire) to give tension to the timing chain.

   Check that the timing chain tensioner plunger fits securely into the tensioner lever groove.

   Check that the timing chain link securely engages with the gear without going beyond.

   Check that the timing chain does not deviate from the chain guide and the tensioner lever chain running surface.
8. Check that each timing mark aligns with two link plates of the timing chain.

INSPECTION

M1113026701227

VALVE CLEARANCE ADJUSTMENT

⚠ CAUTION

The crankshaft should always be rotated clockwise.

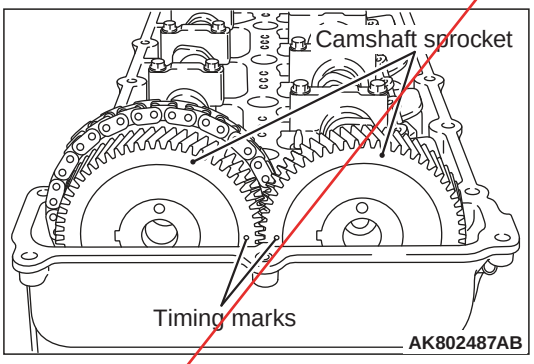

1. Align the camshaft sprocket timing marks and set the No. 1 cylinder at compression stroke top dead centre.

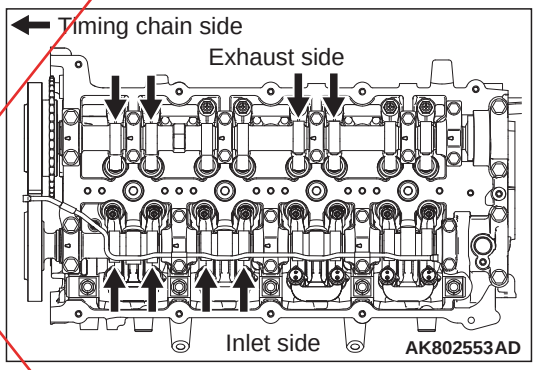

2. For the portions with the arrows shown below, measure and adjust the valve clearances by using the following procedures.

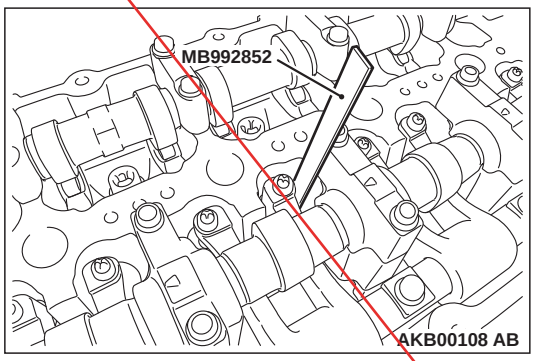

<Inlet side>

1.) Insert the special tool valve adjusting feeling gauge (MB992852) between the valve stem and the adjusting screw.

2). Adjust the clearance between the valve stem and adjusting screw to be within the standard value.

Standard value: 0.14 ± 0.03 mm

<Deleted>

⚠ CAUTION

Pay special attention that the tightening torque is not beyond this valve. If the tightening torque is beyond the valve, the valve stem would possibly bend.

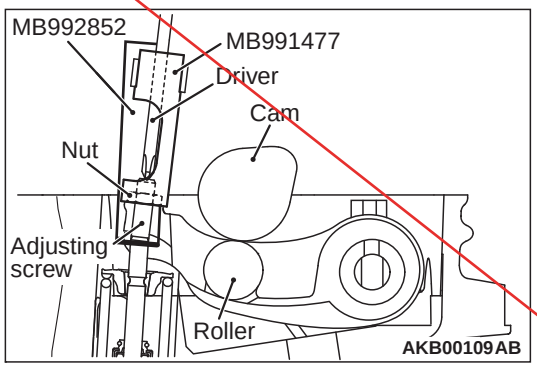

3.)While holding the adjusting screw with a screwdriver to prevent it from turning, tighten the lock nut to the specified torque using the special tool valve adjusting socket (MB991477).

Tightening torque: 9 ± 1 N·m

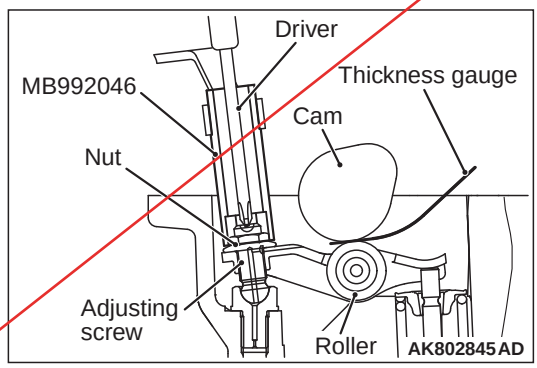

<Exhaust side>

1.)Using a thickness gauge, adjust the clearance between the cam and the roller.

Standard value: 0.16 ± 0.03 mm

⚠ CAUTION

Pay special attention that the tightening torque is not beyond this valve. If the tightening torque is beyond the valve, the valve stem would possibly bend.

2.)While holding the adjusting screw with a screwdriver to prevent it from turning, tighten the lock nut to the specified torque using the special tool(MB992046), valve adjusting socket.

Tightening torque: 9.8 ± 1 N·m

3. Turn the crankshaft 360° clockwise to bring No. 4 cylinder to the compression stroke top dead centre position.

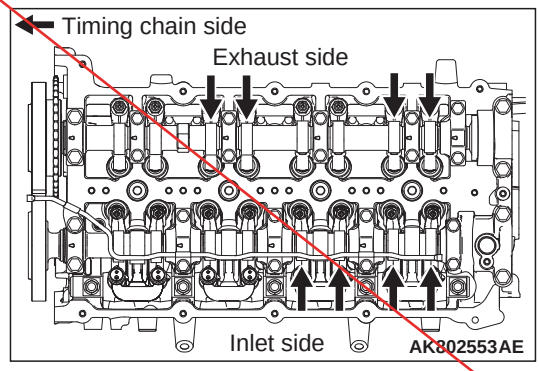

4. For the portions with the arrows shown below, measure and adjust the valve clearances by using the same procedures as ones in the Step 2.

TIMING CHAIN AND CAMSHAFT

REMOVAL AND INSTALLATION

M1113038300063

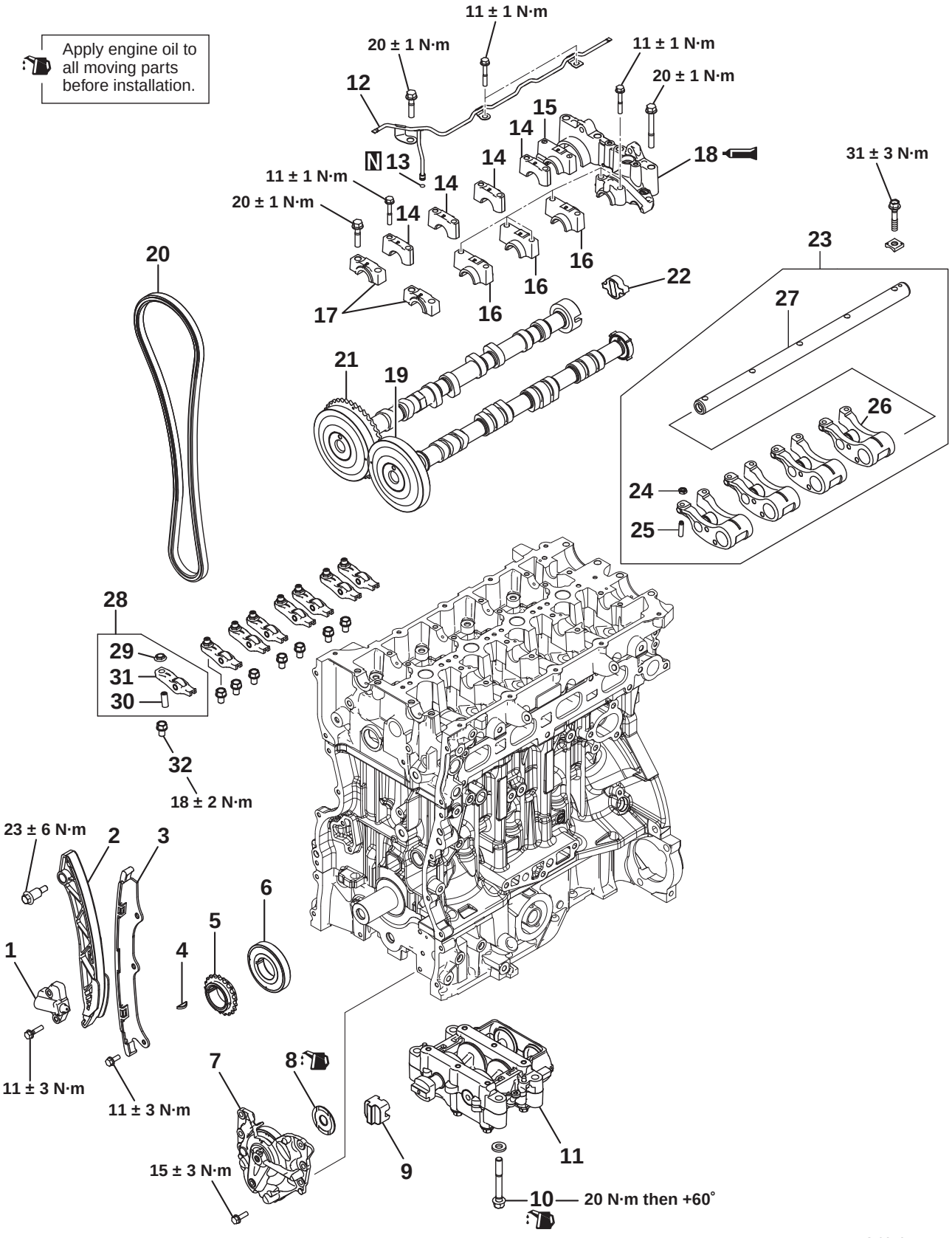

Removal steps

<<A>> >>G<< 1. Timing chain tensioner
>>G<< 2. Tensioner lever
>>G<< 3. Timing chain guide
>>G<< 4. Crankshaft key
>>F<< 5. Crankshaft sprocket
>>E<< 6. Crankshaft gear
>>E<< 7. Balancer shaft drive housing and gear
>>E<< 8. Trust plate
>>E<< 9. Coupling
>>D<< 10. Balancer unit bolt
>>D<< 11. Balancer unit*
12. Inlet oil pipe
13. O-ring
<<B>> >>C<< 14. Right A camshaft bearing cap
<<B>> >>C<< 15. Right B camshaft bearing cap
<<B>> >>C<< 16. Left camshaft bearing cap
<<B>> >>C<< 17. Front camshaft bearing cap
<<B>> >>C<< 18. Rear camshaft bearing cap
>>B<< 19. Inlet camshaft
>>B<< 20. Timing chain
>>B<< 21. Exhaust camshaft
>>A<< 22. Coupling
<<C>> 23. Rocker arm and shaft assembly
24. Nut
25. Adjusting screw
26. Inlet rocker arm
27. Inlet rocker shaft
28. Exhaust rocker arm assembly
29. Nut
30. Adjusting screw
31. Rocker arm
32. Pivot bolt

*NOTE: *: The balancer unit must not be overhauled for the assembly assurance.*

REMOVAL SERVICE POINTS

<<A>> TIMING CHAIN TENSIONER REMOVAL

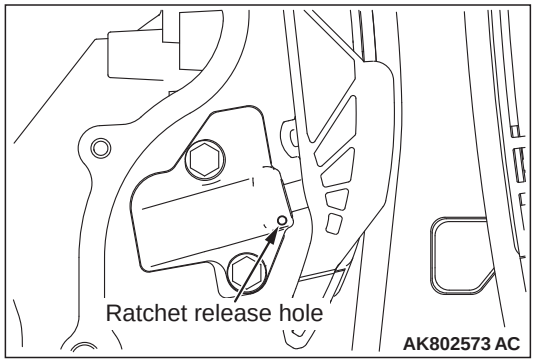

1. Push the tensioner lever by hand and push in the plunger of the timing chain tensioner until it hits the bottom. Then, insert a hard wire (piano wire or the like) of ϕ1.0 or hexagonal bar wrench (1.0 mm) into the fixing hole of the plunger.

⚠ WARNING

If the timing chain tensioner set pin (fixed wire) suddenly comes off the timing chain tensioner, it is very dangerous because the plunger jumps out.

2. Remove the timing chain tensioner.

NOTE: At that time, the timing chain cannot be removed.

<<B>> RIGHT "A" CAMSHAFT BEARING CAP / RIGHT "B" CAMSHAFT BEARING CAP / LEFT CAMSHAFT BEARING CAP / FRONT CAMSHAFT BEARING CAP / REAR CAMSHAFT BEARING CAP REMOVAL

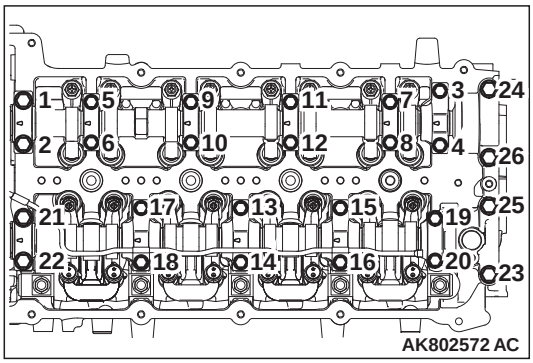

⚠ CAUTION

Loosing the installation bolts for the camshaft bearing cap at the same time causes the valve spring force, which makes the installation bolts jump out, resulting in the damaged threads. Gradually loosen them four or five times, not in one time.

Remove the installation bolts of each camshaft bearing cap in the order shown in the illustration.

<<C>> ROCKER ARM AND SHAFT ASSEMBLY

⚠ CAUTION

Never overhaul the rocker arm and the rocker shaft assembly.

INSTALLATION SERVICE POINTS

>>A<< COUPLING INSTALLATION

Apply oil to the entire coupling to install the coupling to the slit portion of the exhaust camshaft rear end.

NOTE: Do not install it wrongly. Do not drop it.

>>B<< EXHAUST CAMSHAFT / TIMING CHAIN / INLET CAMSHAFT INSTALLATION

1. Install the exhaust camshaft.

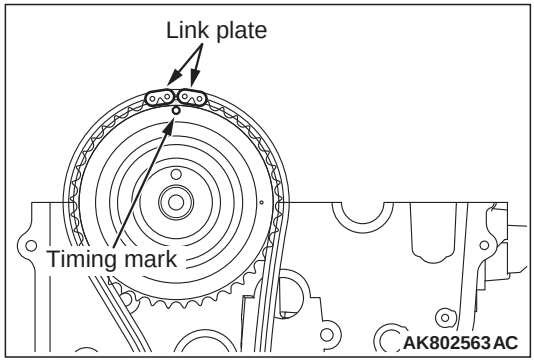

2. Align the timing chain link plate with the timing mark of the exhaust camshaft to loop the timing chain.

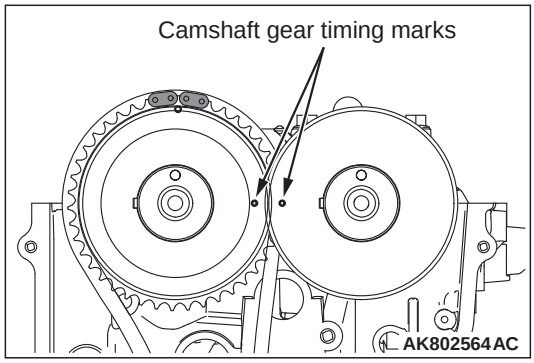

3. Install the inlet camshaft, Align the timing marks on each camshaft gear to install them.

>>C<< REAR CAMSHAFT BEARING CAP / FRONT CAMSHAFT BEARING CAP / LEFT CAMSHAFT BEARING CAP / RIGHT B CAMSHAFT BEARING CAP / RIGHT A CAMSHAFT BEARING CAP INSTALLATION

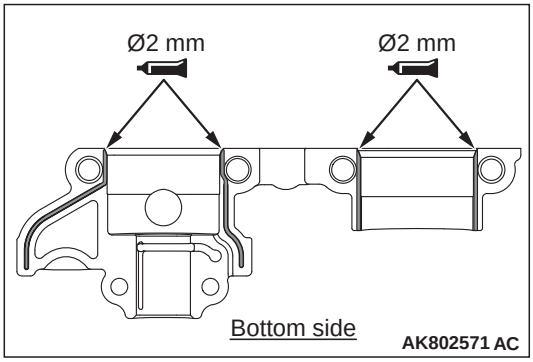

1. Apply the liquid gasket to the rear camshaft bearing cap, as shown in the illustration.

   Specified sealant:
   Three bond 1217G or equivalent

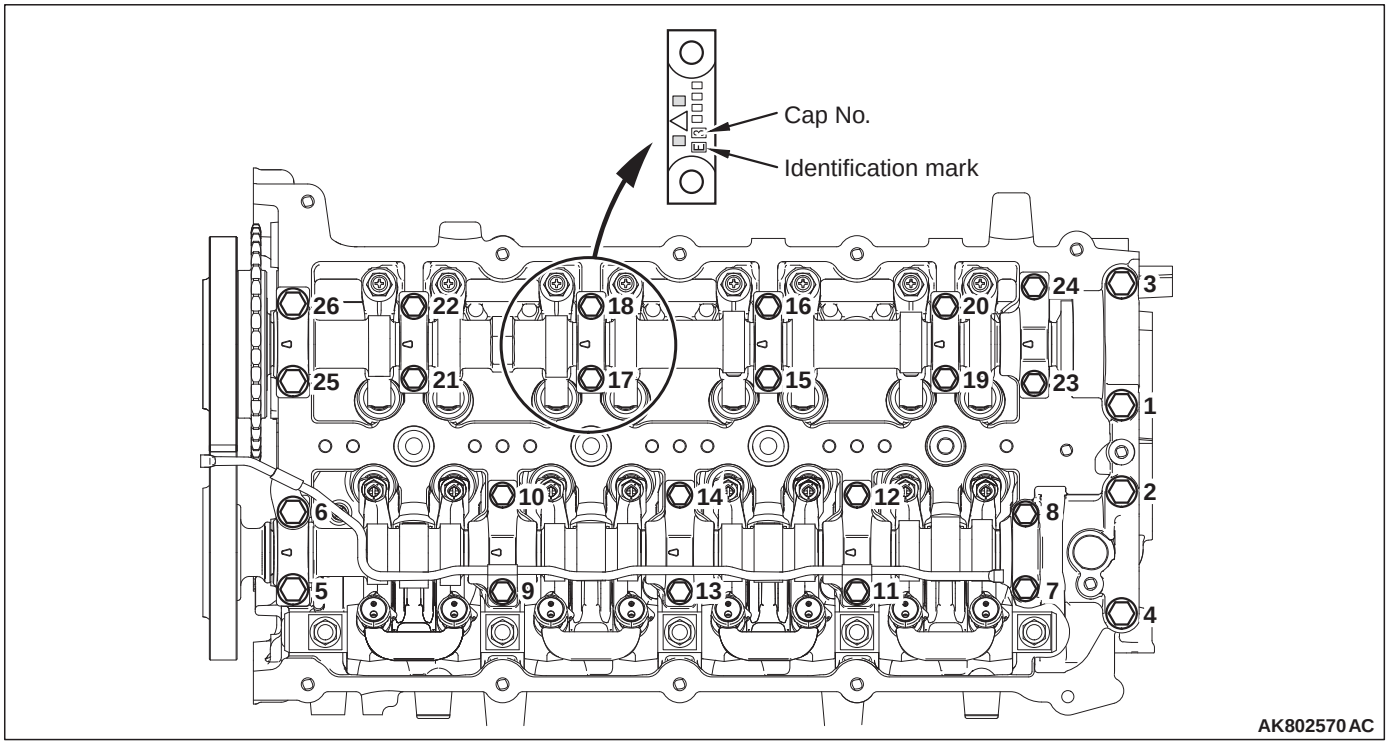

2. Install each camshaft bearing cap to the cylinder head.

NOTE: Check the identification codes regarding the cap No. Check whether it is for the inlet side or the exhaust side.

Identification mark (stamped on each camshaft bearing cap)
I: Inlet side
E: Exhaust side

3. Install a new O-ring to the oil pipe.
4. Install the oil pipe to the camshaft bearing cap.
5. Tighten the camshaft bearing cap bolts to the specified torque in the order shown in the illustration.

Specified torque
M6: 11 ± 1 N·m
M8: 20 ± 1 N·m

>>D<< BALANCER UNIT / BALANCER UNIT BOLT INSTALLATION

1. Apply the appropriate and minimum amount of engine oil to the balance unit bolt thread portion and the lower portion of the flange.

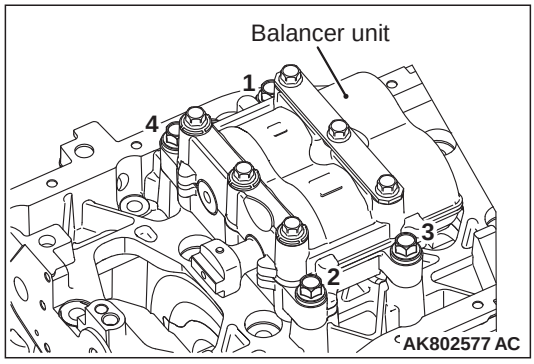

2. Install the balancer unit to the lower crankcase and tighten them to the tighten torque of 20 N·m in the order shown in the illustration.

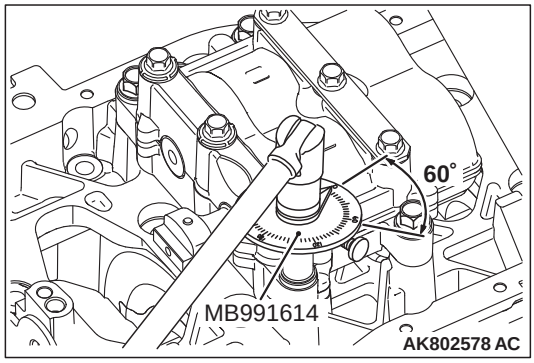

3. Use Special Tool Angle Gauge (MB991614) to tighten them an additional 60°.

>>E<< COUPLING / TRUST PLATE / BALANCER SHAFT DRIVE HOUSING AND GEAR / CRANKSHAFT GEAR INSTALLATION

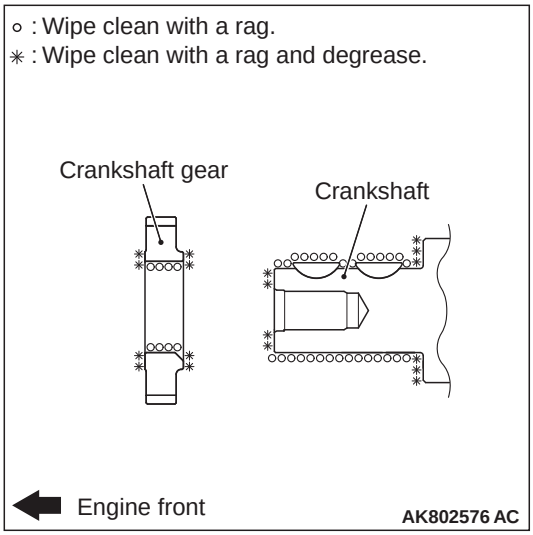

1. Use a rag to wipe off the dirt on the crankshaft gear and the crankshaft. Remove the grease on the portion shown in the illustration.

   NOTE: Remove the grease in order that adhered oil cannot decrease the wear coefficient of the pressed area.

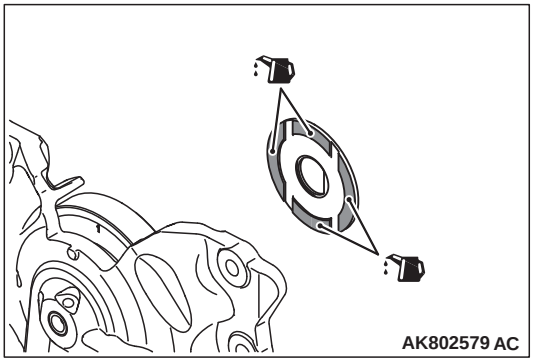

2. Apply the appropriate and minimum amount of engine oil to the thrust plate, as shown in the illustration.
3. Install all of these so that the thrust plate face where the engine oil is applied can face toward the balancer shaft drive housing and gear.

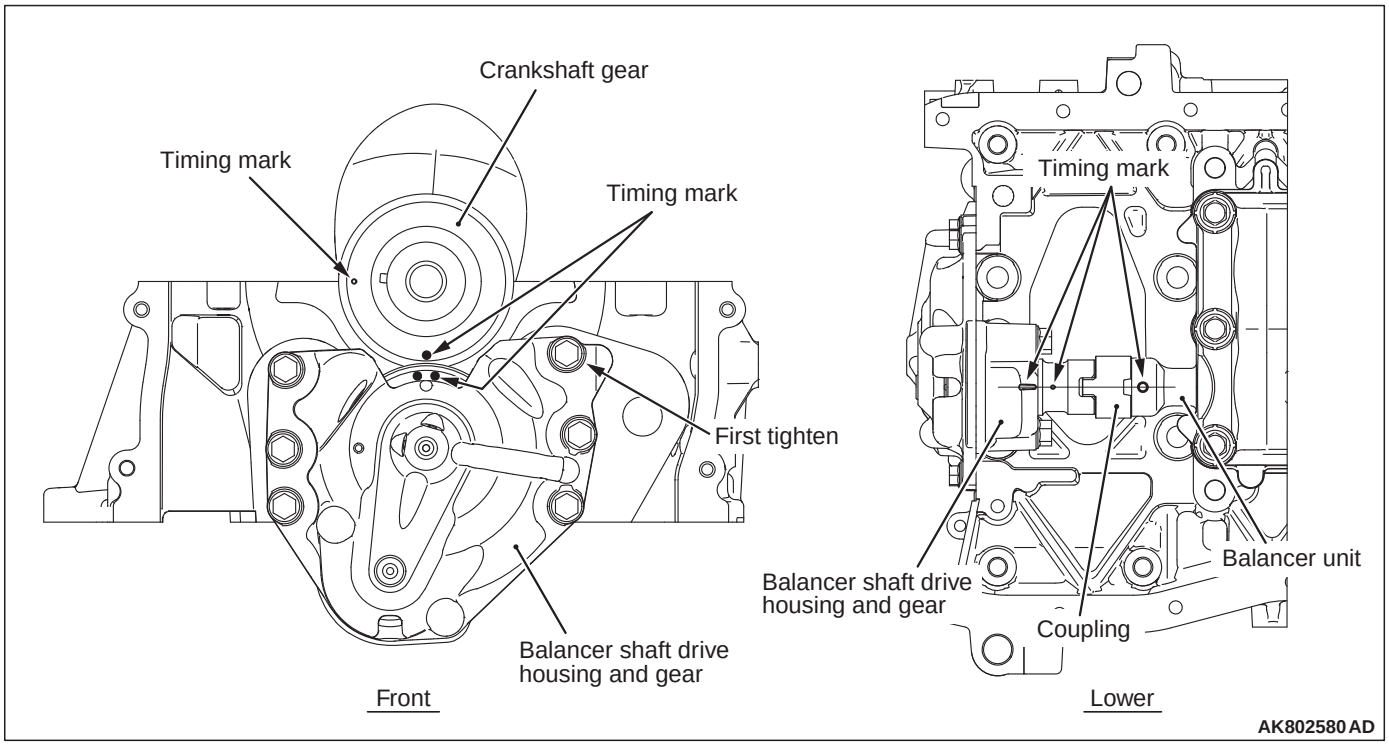

4. Install all of these aligning all the timing marks.
5. When tightening the balancer shaft drive housing and the gear, tighten the bolt shown in the illustration first.

>>F<< CRANKSHAFT SPROCKET INSTALLATION

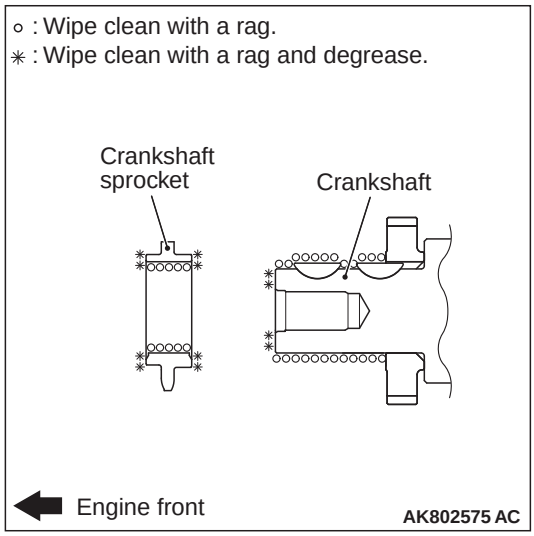

Use a rag to wipe off the dirt on the crankshaft sprocket and the crankshaft. Remove the grease on the portion shown in the illustration.

NOTE: Remove the grease in order that adhered oil cannot decrease the wear coefficient of the pressed area.

>>G<< CRANKSHAFT KEY / TIMING CHAIN GUIDE / TENSIONER LEVER / TIMING CHAIN TENSIONER INSTALLATION

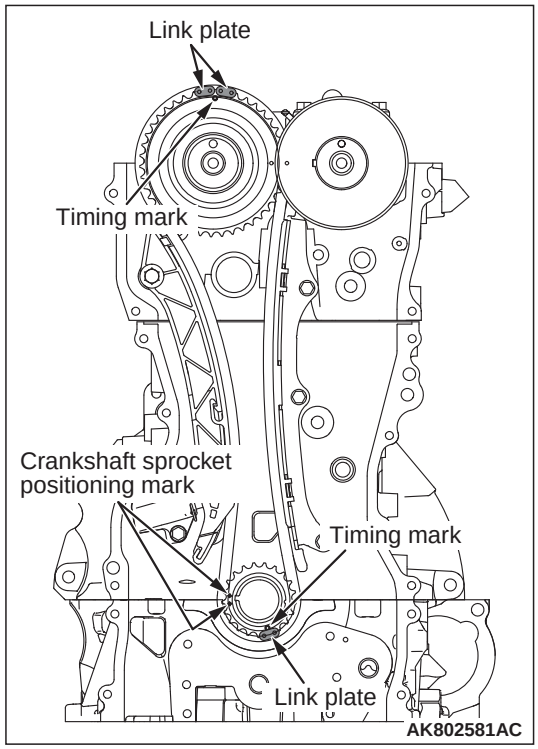

1. Install all of these so that the centres of two location marks of the crankshaft sprocket can align with the border line between the cylinder block and the lower crank case.
2. Install the crankshaft key.

NOTE: This position becomes the No.1 cylinder compression top dead centre finally.

3. Align the timing mark of the camshaft and the timing mark of the crankshaft sprocket with the link plate of the timing chain to install the timing chain.
4. Tighten the chain guide to the specified torque of 11 ± 3 N·m.
5. Tighten the tensioner lever to the specified torque of 24 ± 3 N·m. After the installation, check that the turn direction has flexibility at the bolt support point.
6. Tighten the timing chain tensioner to the specified torque of 11 ± 3 N·m.

⚠ WARNING

If the timing chain tensioner set pin (fixed wire) suddenly comes off the timing chain tensioner, it is very dangerous because the plunger jumps out.

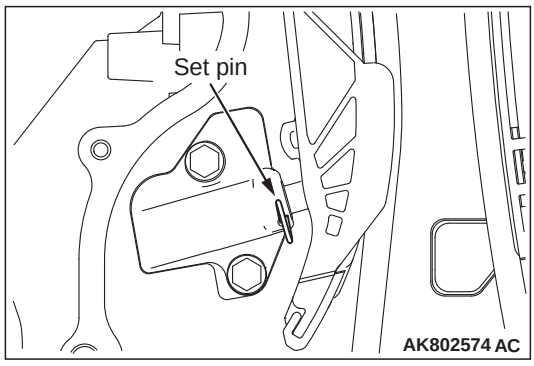

7. After that, pull out the set pin (fixed wire) to give tension to the timing chain.

   Check that the timing chain tensioner plunger fits securely into the tensioner lever groove.

   Check that the timing chain link securely engages with the gear without going beyond.

   Check that the timing chain does not deviate from the chain guide and the tensioner lever chain running surface.
8. Check that each timing mark aligns with two link plates of the timing chain.

INSPECTION

M1113038900065

VALVE CLEARANCE ADJUSTMENT

⚠ CAUTION

The crankshaft should always be rotated clockwise.

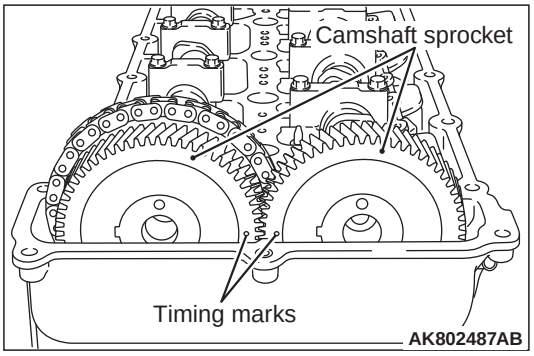

1. Align the camshaft sprocket timing marks and set the No. 1 cylinder at compression stroke top dead centre.

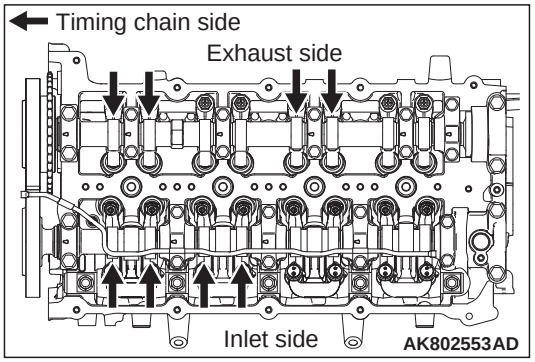

2. For the portions with the arrows shown below, measure and adjust the valve clearances by using the following procedures.

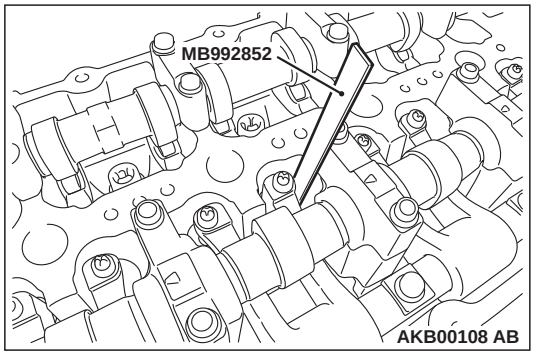

<Inlet side>

1.) Insert the special tool valve adjusting feeling gauge (MB992852) between the valve stem and the adjusting screw.

2). Adjust the clearance between the valve stem and adjusting screw to be within the standard value.

Standard value: 0.14 ± 0.03 mm

⚠ CAUTION

Pay special attention that the tightening torque is not beyond this valve. If the tightening torque is beyond the valve, the valve stem would possibly bend.

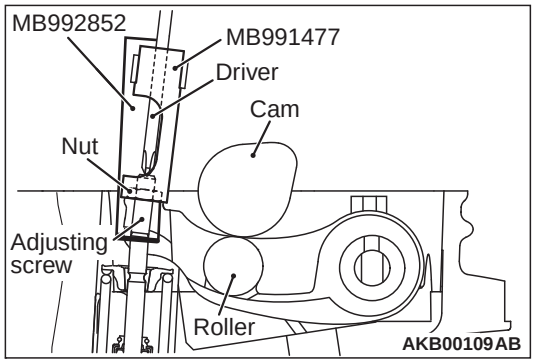

3.)While holding the adjusting screw with a screwdriver to prevent it from turning, tighten the lock nut to the specified torque using the special tool valve adjusting socket (MB991477).

Tightening torque: 9 ± 1 N·m

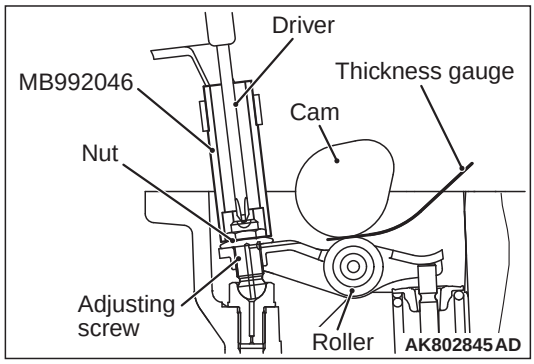

<Exhaust side>

1.)Using a thickness gauge, adjust the clearance between the cam and the roller.

Standard value: 0.16 ± 0.03 mm

⚠ CAUTION

Pay special attention that the tightening torque is not beyond this valve. If the tightening torque is beyond the valve, the valve stem would possibly bend.

2.)While holding the adjusting screw with a screwdriver to prevent it from turning, tighten the lock nut to the specified torque using the special tool(MB992046), valve adjusting socket.

Tightening torque: 9.8 ± 1 N·m

3. Turn the crankshaft 360° clockwise to bring No. 4 cylinder to the compression stroke top dead centre position.

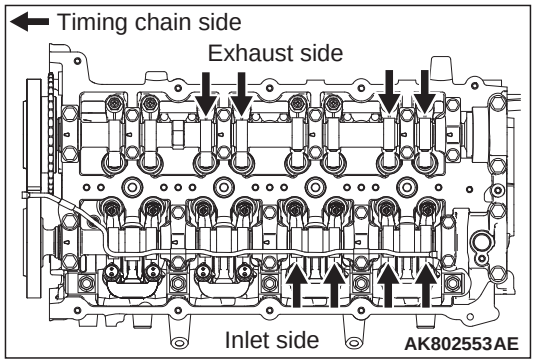

4. For the portions with the arrows shown below, measure and adjust the valve clearances by using the same procedures as ones in the Step 2.

CAMSHAFT INSPECTION

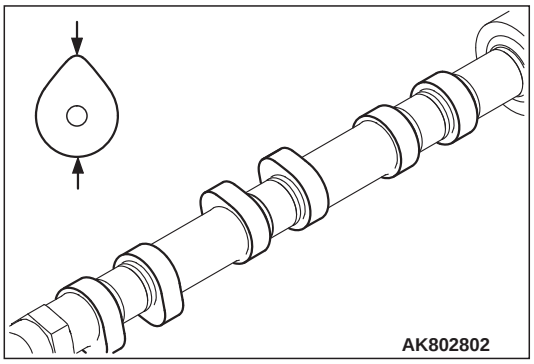

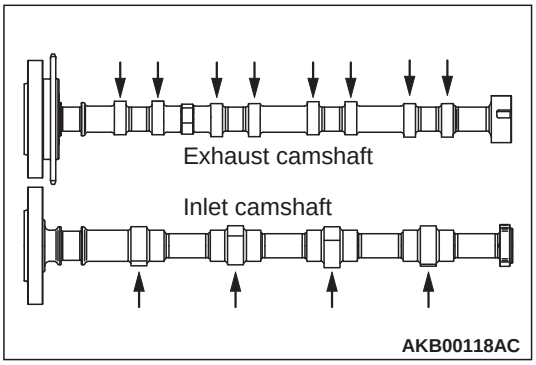

Measure the cam height (cam long diameter). If it goes beyond the limit value, replace the camshaft.

Standard value
Inlet: 36.414 mm
Exhaust: 36.669 mm

Limit
Inlet: 35.914 mm
Exhaust: 36.169 mm

CAMSHAFT

REMOVAL AND INSTALLATION

M1113026901179

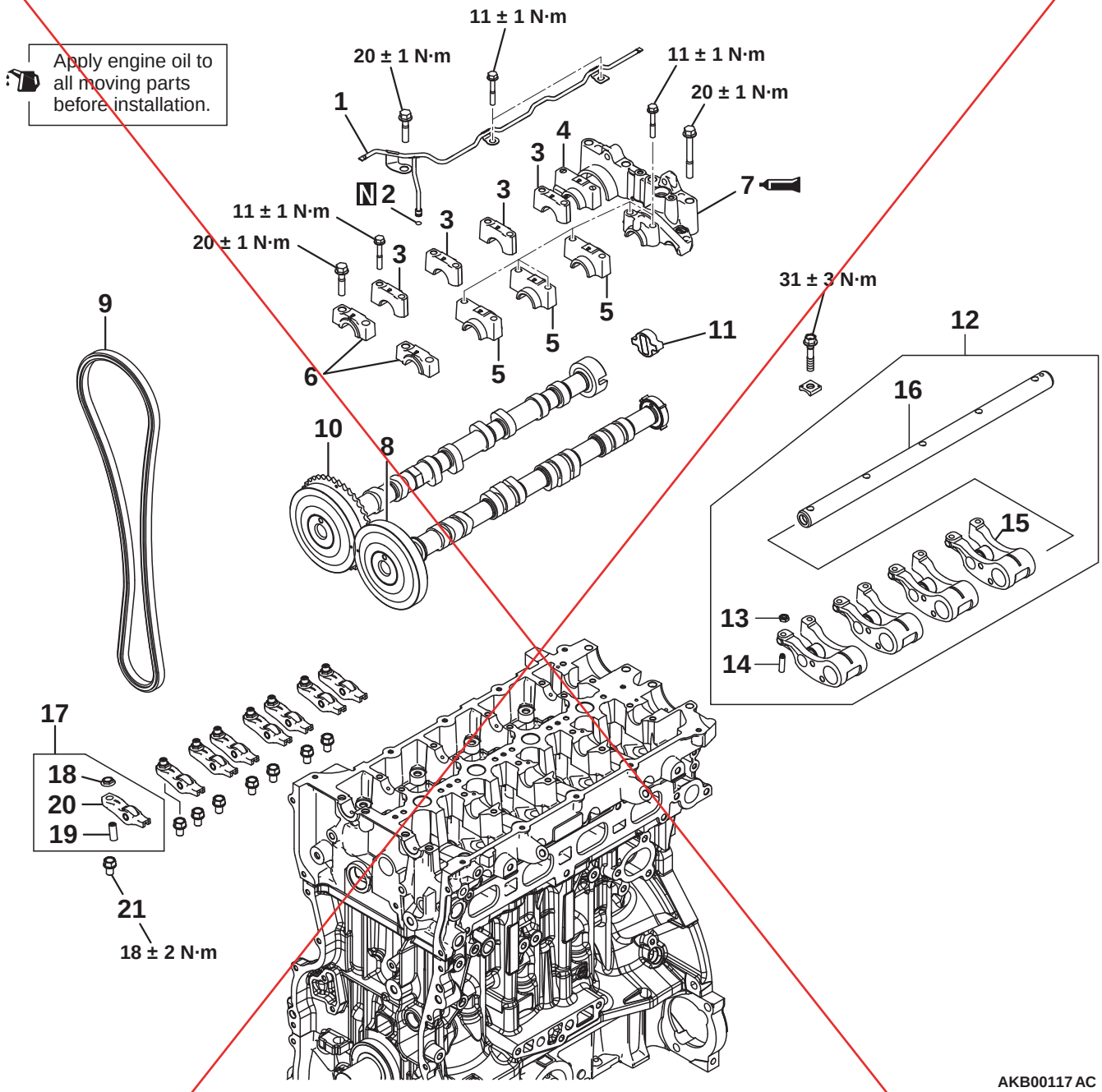

AKB00117 AC

Removal steps

		1. Inlet oil pipe
		2. O-ring
<<A>>	>>C<<	3. Right A camshaft bearing cap
<<A>>	>>C<<	4. Right B camshaft bearing cap
<<A>>	>>C<<	5. Left camshaft bearing cap
<<A>>	>>C<<	6. Front camshaft bearing cap
<<A>>	>>C<<	7. Rear camshaft bearing cap
	>>B<<	8. Inlet camshaft
	>>B<<	9. Timing chain
	>>B<<	10. Exhaust camshaft
	>>A<<	11. Coupling

<<B>>

Removal steps (Continued)

12. Rocker arm and shaft assembly
13. Nut
14. Adjusting screw
15. Inlet rocker arm
16. Inlet rocker shaft
17. Exhaust rocker arm assembly
18. Nut
19. Adjusting screw
20. Rocker arm
21. Pivot bolt

<Deleted>

REMOVAL SERVICE POINTS

<<A>> RIGHT A CAMSHAFT BEARING CAP / RIGHT B CAMSHAFT BEARING CAP / LEFT CAMSHAFT BEARING CAP / FRONT CAMSHAFT BEARING CAP / REAR CAMSHAFT BEARING CAP REMOVAL

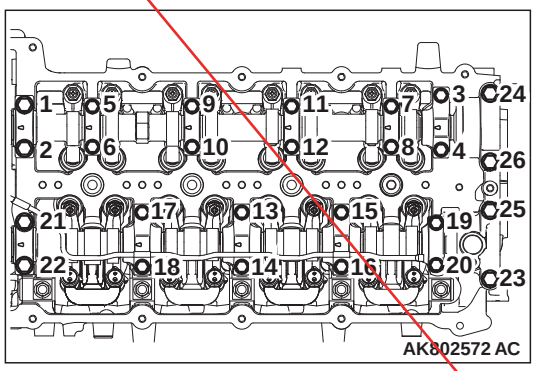

⚠ CAUTION

Loosing the installation bolts for the camshaft bearing cap at the same time causes the valve spring force, which makes the installation bolts jump out, resulting in the damaged threads. Gradually loosen them four or five times, not in one time.

Remove the installation bolts of each camshaft bearing cap in the order shown in the illustration.

<<B>> ROCKER ARM AND SHAFT ASSEMBLY

⚠ CAUTION

Never overhaul the rocker arm and the rocker shaft assembly.

INSTALLATION SERVICE POINTS

>>A<< COUPLING INSTALLATION

Apply oil to the entire coupling to install the coupling to the slit portion of the exhaust camshaft rear end.

NOTE: Do not install it wrongly. Do not drop it.

>>B<< INLET CAMSHAFT / TIMING CHAIN / EXHAUST CAMSHAFT INSTALLATION

1. Install the exhaust camshaft.

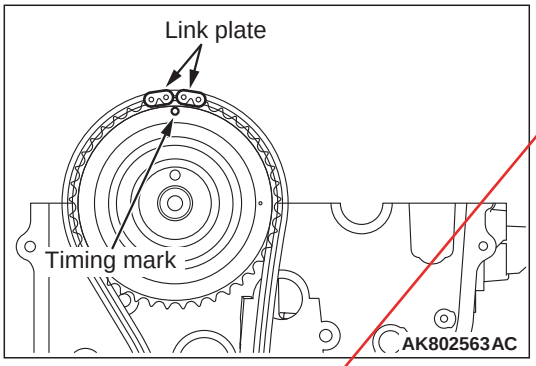

2. Align the timing chain link plate with the timing mark of the exhaust camshaft to loop the timing chain.

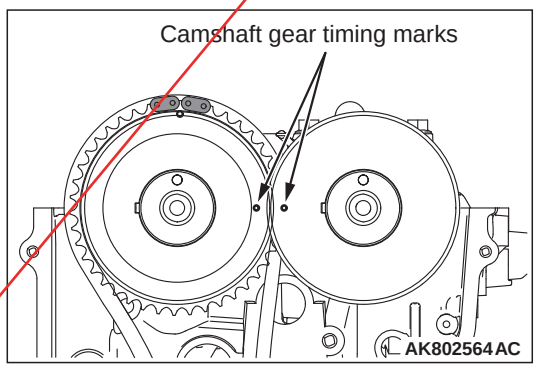

3. Install the inlet camshaft, Align the timing marks on each camshaft gear to install them.

>>C<< REAR CAMSHAFT BEARING CAP / FRONT CAMSHAFT BEARING CAP / LEFT CAMSHAFT BEARING CAP / RIGHT B CAMSHAFT BEARING CAP / RIGHT A CAMSHAFT BEARING CAP INSTALLATION

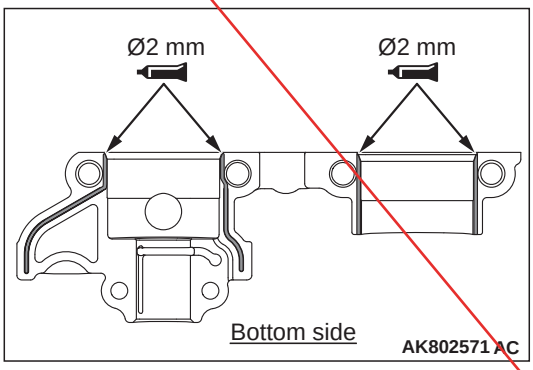

1. Apply the liquid gasket to the rear camshaft bearing cap, as shown in the illustration.

Specified sealant:
Three bond 1217G or equivalent

<Deleted>

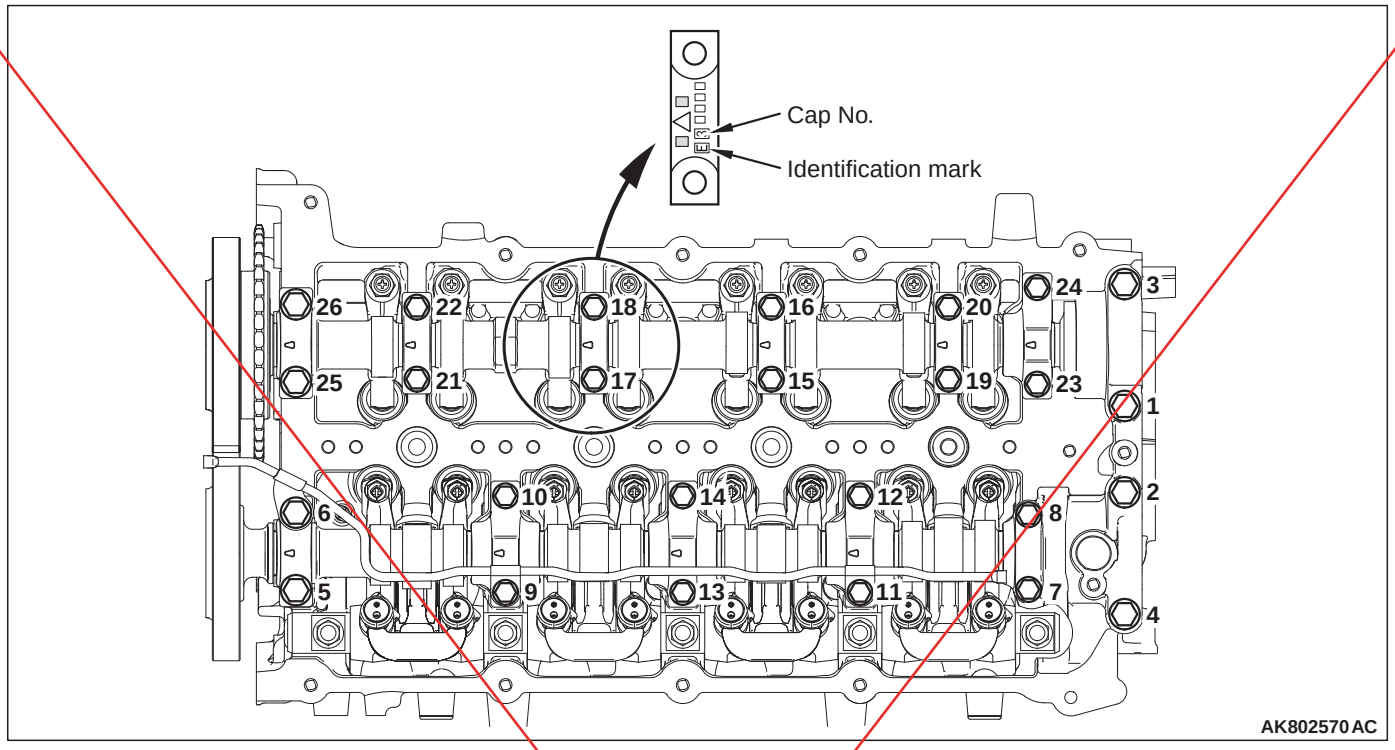

2. Install each camshaft bearing cap to the cylinder head.

   NOTE: Check the identification codes regarding the cap No. Check whether it is for the inlet side or the exhaust side.

   Identification mark (stamped on each camshaft bearing cap)
   I: Inlet side
   E: Exhaust side

3. Install a new O- ring to the oil pipe.
4. Install the oil pipe to the camshaft bearing cap.
5. Tighten the camshaft bearing cap bolts to the specified torque in the order shown in the illustration.

   Specified torque
   M6: 11 ± 1 N·m
   M8: 20 ± 1 N·m

INSPECTION

M1113027001050

CAMSHAFT

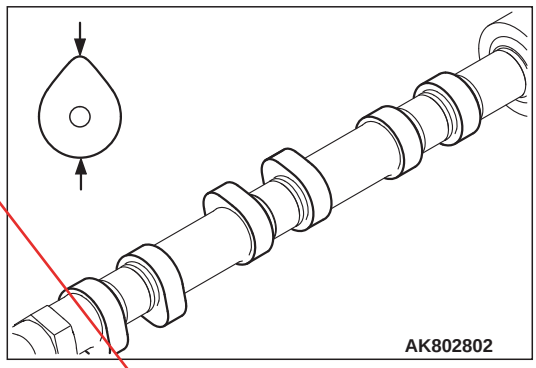

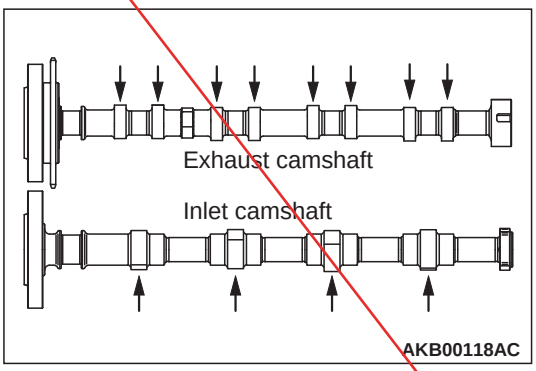

Measure the cam height (cam long diameter). If it goes beyond the limit value, replace the camshaft.

Standard value
Inlet: 36.414 mm
Exhaust: 36.669 mm

Limit
Inlet: 35.914 mm
Exhaust: 36.169 mm