INFORMATION DOCUMENT

of

Gasoline On-Board Diagnostic system

Family Name : MMC-EOBD-G11

CONTENTS (Page per each Part)

Part 1 Cover..... 1
Part 2 Description of Gasoline EOBD system..... 1
Part 3 Description of monitoring method..... 1 - 6
Part 4 List of monitoring items - Engine..... 1 - 5
Part 5 List of monitoring items - Automatic T/M..... 1 - 15
Part 6 List of additional monitoring items - Engine..... 1 + 2
Part 7 List of data given in service $06..... 1

3.2.12.2.7	On-board-diagnostic (OBD) system	
3.2.12.2.7.1	Written description and/or drawing of the MI	: See Part 3
3.2.12.2.7.2	List and purpose of all components monitored by the OBD system	: See Parts 4 to 5
3.2.12.2.7.3	Written description (general working principles) for	
3.2.12.2.7.3.1.	Positive-ignition engines	
3.2.12.2.7.3.1.1.	Catalyst monitoring	: See Part 3
3.2.12.2.7.3.1.2.	Misfire detection	: See Part 3
3.2.12.2.7.3.1.3.	Oxygen sensor monitoring	: See Part 3
3.2.12.2.7.3.1.4.	Other components monitored by the OBD system	: See Part 3
3.2.12.2.7.4	Criteria for MI activation (fixed number of driving cycles or statistical method)	: See Part 4
3.2.12.2.7.5	List of all OBD output codes and formats used (with explanation of each)	: See Part 4
3.2.12.2.7.6	Additional information provided by the vehicle manufacturer for the purposes of enabling the manufacturer of OBD-compatible replacement or service parts and diagnostic tools and test equipment	: See Part 4
3.2.12.2.7.6.1	A description of the type and number of the pre-conditioning cycles used for the original type-approval of the vehicle.	: See Part 4
3.2.12.2.7.6.2	A description of the type of the OBD demonstration cycle used for the original type-approval of the vehicle for the component monitored by the OBD system.	: See Part 4
3.2.12.2.7.6.3	A comprehensive document describing all sensed components with the strategy for fault detection and MI activation (fixed number of driving cycles or statistical method), including a list of relevant secondary sensed parameters for each component monitored by the OBD system. A list of all OBD output codes and format used (with an explanation of each) associated with individual emission related power-train components and individual non-emission related components, where monitoring of the component is used to determine MI activation, including in particular a comprehensive explanation for the data given in service $05 Test ID $21 to FF and the data given in service $06.	: See Parts 4 & 6
3.2.12.2.7.6.4	The information required above may be defined by completing a table as described below.	: See Part 4

Description of monitoring method

1. Monitoring items

1.1 Catalyst monitoring (3.3.3.1. of Annex XI of ECE R83)

(a) Monitoring method
- Front oxygen or A/F sensor and rear oxygen sensors are located upstream and downstream of the monitored catalyst.
- Calculate rich/lean switching frequency ratio (R_f) of front oxygen or A/F sensor and rear oxygen sensor according to the following equation:

$$Rf = \frac{\text{Rear oxygen sensor rich/lean switching frequency}}{\text{Front oxygen or A/F sensor rich/lean switching frequency}}$$

- Frequency ratio (Rf) is sampled for specified times
- Calculate average switching frequency ratio (Rf_{ave})

(b) Malfunction criteria

$Rf_{ave} > R_0$ and $R_f >= R_1$

R_0 : threshold value for average frequency ratio

R_1 : threshold value for real-time frequency ratio

(c) Malfunction Indicator (MI) & Fault Code

If the malfunction described above is detected, pending fault code is stored. When the malfunction is again detected during the succeeding driving cycle, confirmed fault code is stored and MI is illuminated.

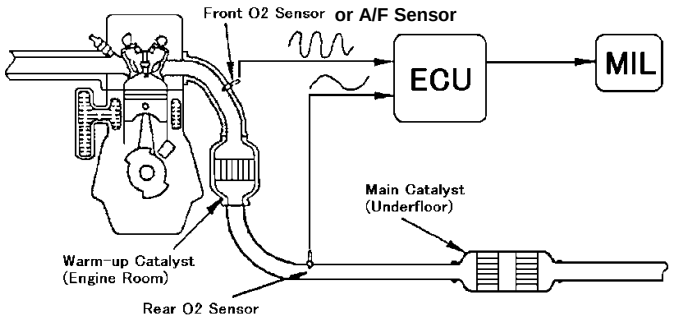

Warm-up catalyst and underfloor catalyst system

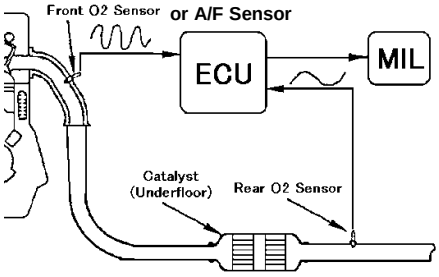

Underfloor catalyst system

1.2 Misfire detection (3.3.3.2. of Annex XI of ECE R83)

(a) Monitoring method
- Fluctuation of crank angular acceleration is monitored.
- Calculate the crank angular acceleration(a(n)) according to the following equation:

$$a(n) = \frac{1}{Tn} \times \left(\frac{1}{Tn} - \frac{1}{Tn_{-1}} \right)$$ Tn : n-th time period during specified crank angle revolution

- Detect misfire when a(n) < a_0 (a_0 : threshold value)
- Calculate misfire rate (R_{MF}) during specified engine revolution (200rev. and 1000rev.)

(b) Malfunction criteria

R_{MF} >= R_0 or RMF >= R_1

R_0 : threshold value for catalyst damage misfire

R_1 : threshold value for emission-increasing misfire (See Part 3, Item 9 for specific percentage of misfire for each model)

(c) Malfunction Indicator (MI) & Fault Code

Type A
- If the catalyst damage misfire is detected, confirmed fault code is stored and MI is illuminated (stay on), and fuel shutoff is activated on misfiring cylinder as soon as the misfire is detected. Fuel shutoff is deactivated when engine operation gets out of the misfire range.
- If the emission-increasing misfire is detected, pending fault code is stored. When the malfunction is again detected during the succeeding driving cycle, confirmed fault code is stored and MI is illuminated.

Type B
- If the catalyst damaging misfire is detected, pending fault code is stored. Fuel shutoff for misfire cylinder and MI blinking are activated as soon as the catalyst damaging misfire is detected. Fuel shutoff and MI blinking are deactivated when engine operation gets out of misfire range. When the malfunction is again detected during the succeeding driving cycle, confirmed fault code is stored and MI is illuminated (stay on).
- If the emission-increasing misfire is detected in the following cases, pending fault code is stored. When the malfunction is again detected in the following cases during the succeeding driving cycle, confirmed fault code is stored and MI is illuminated.
  Case1: For the first 1000 revolutions after engine start
  Case2: For four times after the first 1000revolutions after engine start

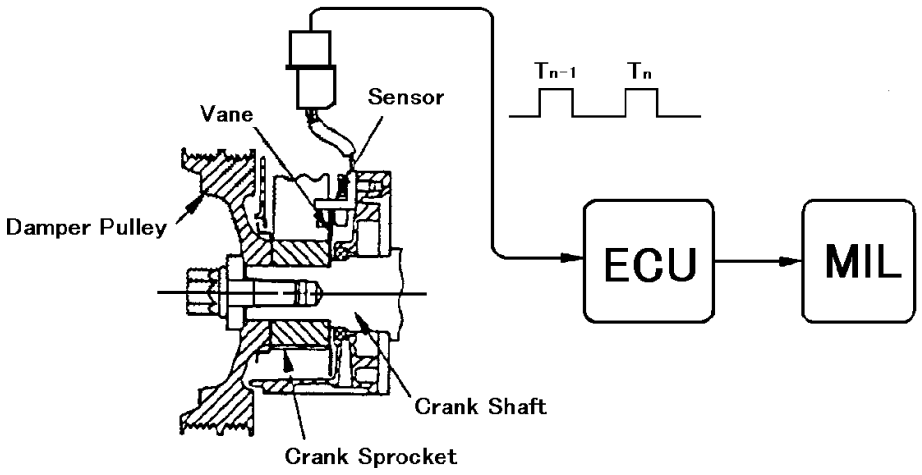

1.3 Oxygen sensor monitoring (3.3.3.3. of Annex XI of ECE R83)

1.3.1 Front oxygen or A/F sensor

(a) Monitoring method
- Front oxygen or A/F sensor rich/lean switching frequency (Ff) is monitored.
- Calculate average switching frequency (Ffave)

(b) Malfunction criteria
- Ffave < F0 and Ff < F1
  F0 : threshold value for average frequency
  F_1 : threshold value for real-time frequency

(c) Malfunction Indicator (MI) & Fault Code
If the malfunction described above is detected, pending fault code is stored. When the malfunction is again detected during the succeeding driving cycle, confirmed fault code is stored and MI is illuminated.

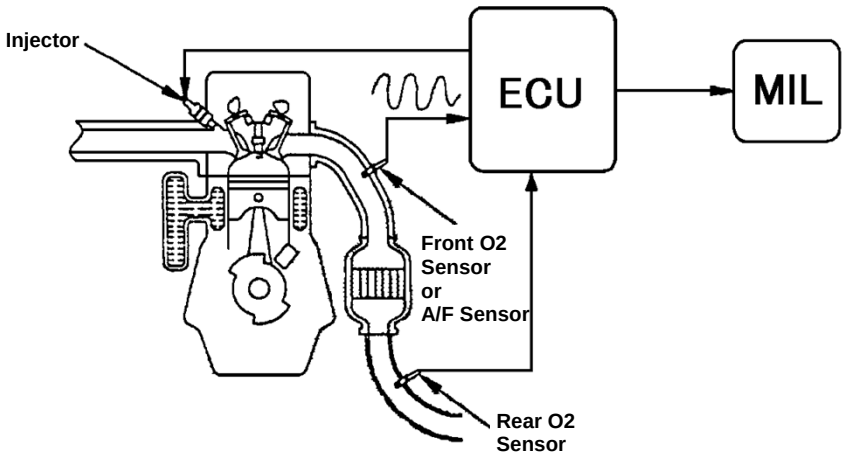

1.3.2 Rear oxygen sensor

(a) Monitoring method
- Calculate rear oxygen sensor voltage change ($\Delta V_{O2} = V_{O2\ MAX} - V_{O2\ MIN}$) during go/stop operation

(b) Malfunction criteria
- $\Delta V_{O2} < V_0$ (V_0 : threshold value) or $V_{O2\ MAX} <= V_1$ (V_1 : threshold value)

(c) Malfunction Indicator (MI) & Fault Code
If the malfunction described above is detected, pending fault code is stored. When the malfunction is again detected during the succeeding driving cycle, confirmed fault code is stored and MI is illuminated.

1.4 Other emission control system components or systems (3.3.3.4. of Annex XI of ECE R83)

1.4.1 Fuel system monitoring

(a) Monitoring method
Air fuel ratio feedback compensation values* are monitored.
*: short term fuel trim (Integral value : K_I) and long term fuel trim (A/F learning value : K_{LRN})

(b) Malfunction criteria
- $K_{LRN} >= K_0$ and $K_I >= K_1$ (K_0, K_1 : threshold value for lean shift) or
- $K_{LRN} <= K_2$ and $K_I <= K_3$ (K_2, K_3 : threshold value for rich shift)

(c) Malfunction Indicator (MI) & Fault Code
If the malfunction described above is detected, pending fault code is stored. When the malfunction is again detected during the succeeding driving cycle, confirmed fault code is stored and MI is illuminated.

1.4.2 Exhaust gas recirculation (EGR) system

The EGR system will not be monitored since the removal of the system will not result in emissions exceeding the EOBD threshold limits.

1.5 Circuit continuity monitoring (3.3.3.5. of Annex XI of ECE R83)

- All emission-related power-train components connected to a computer are monitored for circuit continuity.
- If the malfunction is detected, confirmed fault code is stored and MI is illuminated on first or second driving cycle.

1.6 Evaporative emission purge control system monitoring (3.3.3.6. of Annex XI of ECE R83)

- Evaporative purge solenoid is monitored for circuit continuity.
- If the malfunction is detected, pending fault code is stored. When the malfunction is again detected during the succeeding driving cycle, confirmed fault code is stored and MI is illuminated.

2. Fault code storage

- The fault codes can be read-out and reset by means of a generic scan-tool via the diagnostic connector on the vehicle.
- The fault codes will be erased after 40 engine warm-up cycles during which the same fault is not re-registered.
- The distance traveled by the vehicle while the MI is activated is available at any instant through the serial port on the standard link connector.

3. Freeze-frame data

- Upon determination of the first malfunction, following data required by 6.5.1.1 of Annex XI - Appendix 1 of ECE R83 are stored in computer memory.

  - Calculated load value
  - Fuel trim values
  - Coolant temperature
  - Closed- or open loop operation
  - Engine speed
  - Vehicle speed
  - Intake manifold pressure (if available)
  - Fault code which caused the data to be stored

4. Monitor disablement

- The OBD monitors for catalytic converter, misfire, oxygen sensor deterioration and fuel system are disabled when ambient temperature is below -10degC or barometric pressure is below 570mmHg.
- The disablement is necessary to avoid unreliable monitoring and is allowed in 3.2.1.2. of Annex XI of ECE R83.

5. Calibration identification

- The software calibration identification number is available through the serial port on the standardized data link connector and is provided in a standardized format in accordance with SAE J1979.
- The software calibration identification number consists of the part number of the controller and an alphanumeric code which has maximum 16 digits.

6. Data link connector

Data link connector complies with ISO DIS 15031-3.

7. Malfunction Indicator

- Malfunction indicator lamp identified by the following symbol illuminates when the ignition key is turned to “ON” position before engine start to indicate that malfunction indicator lamp is functioning.
- Malfunction indicator lamp illuminates when the emission-related component or system is malfunctioning.

Location : Malfunction indicator lamp is located somewhere in the meter cluster depending on vehicle models so that it is readily visible to the driver.

Size : The size of the actual symbol is almost the same as those of other symbols in the meter cluster, such as the brake failure tell-tale or the battery charging condition tell-tale.

Symbol of malfunction indicator lamp 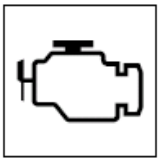 Color: Amber (Tell-tale)

8. Provisions taken to prevent tampering with and modification of the emission control computer

- The emission control computer is integrated in the powertrain control module and non-removable.
- The software is protected against misuse by encoding, checksum detection or encrypted access.
- Switch-off function is not provided to emission control computer.

9. Minimum percentage of Misfire

Model	Percentage of misfire
GA1W, GB1W, GC1W	2.0 %
CW4W	2.0 %
CW5W, CG5W, CH5W	1.8 %
CY1A, CX1A	2.0 %
CY3A, CX3A	2.0 %
CY4A, CX4A, CZ4A with T/C	2.0 %
Z31A	2.0 %
Z32A	2.0 %
Z33A	2.0 %
Z34A	2.0 %
Z37A	2.0 %
CY6A, CX6A	2.0 %
GF7W, GF8W	2.0 %
A05A, A03A, A13A	2.0 %
GG2W	2.0 %
GB2W, GC2W	2.0 %

Component	Fault code	Monitoring Strategy	Fault detection Criteria	MI activation criteria	Secondary Parameters	Precondition	Demo. test
Variable valve timing system	P0010	Circuit continuity (Oil control valve)	Current	2nd cycle	Battery voltage	One Type1 cycle	Type1
	P0013	Circuit continuity (Oil control valve)	Current	2nd cycle	Battery voltage	One Type1 cycle	Type1
	P1021	Circuit continuity (Oil control valve)	Current	2nd cycle	Battery voltage	One Type1 cycle	Type1
A/F sensor heater	P0031	Range check-min	Current	2nd cycle	Battery voltage Time after engine start-up	One Type1 cycle	Type1
	P0032	Range check-max	Current	2nd cycle	Battery voltage Time after engine start-up	One Type1 cycle	Type1
Oxygen sensor heater (Front)	P0031	Range check-min	Current	2nd cycle	Battery voltage Time after engine start-up	One Type1 cycle	Type1
	P0032	Range check-max	Current	2nd cycle	Battery voltage Time after engine start-up	One Type1 cycle	Type1
	P0135	Range check	Current	2nd cycle	Time after engine start-up	One Type1 cycle	Type1
Oxygen sensor heater (Rear)	P0037	Range check-min	Current	2nd cycle	Battery voltage Time after engine start-up	One Type1 cycle	Type1
	P0038	Range check-max	Current	2nd cycle	Battery voltage Time after engine start-up	One Type1 cycle	Type1
	P0141	Range check	Current	2nd cycle	Time after engine start-up	One Type1 cycle	Type1
Air flow sensor / Manifold absolute pressure sensor	P0068	Plausibility	Calculated load value*1	1st cycle	Ignition on	-	Type1
	P1963	Plausibility	Calculated load value	1st cycle	Ignition on	-	Type1
Air flow sensor	P0100	Range check	Air flow rate	2nd cycle	Ignition on	-	Type1
	P0102	Range check-min	Air flow rate	1st cycle	Ignition on	-	Type1
	P0103	Range check-max	Air flow rate	1st cycle	Ignition on	-	Type1
Manifold absolute pressure sensor	P0105	Range check	Voltage	2nd cycle	Ignition on	-	Type1
	P0107	Range check-min	Voltage	1st cycle	Ignition on, Throttle position	-	Type1
	P0108	Range check-max	Voltage	1st cycle	Ignition on	-	Type1
Intake air temperature sensor 2	P0097	Range check-min	Voltage	1st cycle	Time after engine start-up	-	Type1
	P0098	Range check-max	Voltage	1st cycle	Time after engine start-up	-	Type1
Intake air temperature sensor	P0110	Range check	Voltage	2nd cycle	Ignition on	-	Type1
	P0112	Range check-min	Voltage	1st cycle	Time after engine start-up	-	Type1
	P0113	Range check-max	Voltage	1st cycle	Time after engine start-up	-	Type1
Engine coolant temperature sensor	P0115	Range check Rationality	Voltage Temperature drop	2nd cycle	Ignition on	-	Type1
	P0117	Range check-min	Voltage	1st cycle	Ignition on	-	Type1
	P0118	Range check-max	Voltage	1st cycle	Ignition on	-	Type1
	P0125	Rationality	Temperature drop	1st cycle	Engine running	-	Type1
	P0125	Rationality	Temperature drop	2nd cycle	Engine running	One Type1 cycle	Type1

*1: Charge efficiency for vehicles equipped with air flow sensor,
Manifold pressure for vehicles without air flow sensor

Component	Fault code	Monitoring Strategy	Fault detection Criteria	MI activation criteria	Secondary Parameters	Precondition	Demo. test
Throttle position sensor (TPS)	P0122	Range check-min (TPS-main)	Voltage	1st cycle	Ignition on	-	Type1
	P0123	Range check-max (TPS-main)	Voltage	1st cycle	Ignition on	-	Type1
	P0121	Plausibility (TPS-main)	Calculated load value*1	1st cycle	Engine speed	-	Type1
	P1961	Plausibility (TPS-main)	Calculated load value	1st cycle	Engine speed	-	Type1
	P0222	Range check-min (TPS-sub)	Voltage	1st cycle	Ignition on	-	Type1
	P0223	Range check-max (TPS-sub)	Voltage	1st cycle	Ignition on	-	Type1
	P0221	Plausibility (TPS-sub)	Calculated load value*1	1st cycle	Engine speed	-	Type1
	P1962	Plausibility (TPS-sub)	Calculated load value	1st cycle	Engine speed	-	Type1
	P1238	Plausibility (TPS-main, sub)	Calculated load value*1	1st cycle	Engine speed	-	Type1
	P1966	Plausibility (TPS-main, sub)	Calculated load value	1st cycle	Engine speed	-	Type1
	P2135	Rationality (TPS-main, sub)	Relation between main and sub	1st cycle	Battery voltage	-	Type1
A/F sensor	P0130	Circuit over voltage	Voltage	2nd cycle	Battery voltage Time after engine start-up	One Type1 cycle	Type1
	P0131	Range check-min	Voltage	2nd cycle	Battery voltage Time after engine start-up	One Type1 cycle	Type1
	P0132	Range check-max	Voltage	2nd cycle	Battery voltage Time after engine start-up	One Type1 cycle	Type1
	P0133	Deterioration	Switching frequency	2nd cycle	Engine speed, Load value*1, Coolant temp., Fuel system	One Type1 cycle	Type1
	P0134	No active detected	Sensor Impedance	2nd cycle	Battery voltage Time after engine start-up	One Type1 cycle	Type1
	P2237	Circuit continuity-open (Positive current control)	Voltage	2nd cycle	Battery voltage Time after engine start-up	One Type1 cycle	Type1
	P2243	Circuit continuity-open (Reference current control)	Voltage	2nd cycle	Battery voltage Time after engine start-up	One Type1 cycle	Type1
	P2251	Circuit continuity-open (Negative current control)	Voltage	2nd cycle	Battery voltage Time after engine start-up	One Type1 cycle	Type1
Oxygen sensor (Front)	P0130	Range check Deterioration	Voltage Switching frequency	2nd cycle	Battery voltage, Offset voltage, Time after engine start-up Engine speed, Load value*1, Coolant temp., Fuel system	One Type1 cycle	Type1
	P0131	Range check-min	Voltage	2nd cycle	Battery voltage, Offset voltage, Time after engine start-up	One Type1 cycle	Type1
	P0132	Range check-max	Voltage	2nd cycle	Offset voltage, Time after engine start-up	One Type1 cycle	Type1
	P0133	Deterioration	Switching frequency	2nd cycle	Engine speed, Load value*1, Coolant temp., Fuel system	One Type1 cycle	Type1
Air fuel ratio feedback	P0125	Rationality	Oxygen sensor (Front) signal	1st cycle	Engine speed, Load value, Coolant temp., Fuel system, Throttle position	-	Type1
	P0134	Rationality	Oxygen sensor (Front) signal	1st cycle	Engine speed, Load value*1, Coolant temp., Fuel system, Throttle position	-	Type1
	P0134	Rationality	Oxygen sensor (Front) signal	2nd cycle	Engine speed, Load value*1, Coolant temp., Fuel system, Throttle position	One Type1 cycle	Type1
Oxygen sensor (Rear)	P0136	Range check	Voltage	2nd cycle	Battery voltage, Offset voltage, Time after engine start-up	One Type1 cycle	Type1
	P0137	Range check-min	Voltage	2nd cycle	Battery voltage, Offset voltage, Time after engine start-up	One Type1 cycle	Type1
	P0138	Range check-max	Voltage	2nd cycle	Offset voltage, Time after engine start-up	One Type1 cycle	Type1
	P0140	Rationality	Oxygen sensor (Rear) signal	2nd cycle	Engine speed, Load value*1, Coolant temp., Vehicle speed	One Type1 cycle	Type1
Fuel system	P0170	A/F shift	Fuel trim values	2nd cycle	Coolant temp., Fuel system	Two Type1 cycles	Type1
	P0171	A/F shift to lean	Fuel trim values	2nd cycle	Coolant temp., Fuel system	Two Type1 cycles	Type1
	P0172	A/F shift to rich	Fuel trim values	2nd cycle	Coolant temp., Fuel system	Two Type1 cycles	Type1

*1: Charge efficiency for vehicles equipped with air flow sensor,
Manifold pressure for vehicles without air flow sensor

Component	Fault code	Monitoring Strategy	Fault detection Criteria	MI activation criteria	Secondary Parameters	Precondition	Demo. test	
Injection valve	P0201-P0203	Circuit continuity	Voltage, Current	2nd cycle	Activation command	One Type1 cycle	Type1	
	P0201-P0204	Circuit continuity	Voltage, Current	2nd cycle	Activation command	One Type1 cycle	Type1	
	P0261	Circuit continuity (Open/Shorted-low)	Voltage	2nd cycle	Activation command	One Type1 cycle	Type1	
	P0262	Circuit continuity (Shorted-high)	Current	2nd cycle	Activation command	One Type1 cycle	Type1	
	P0264	Circuit continuity (Open/Shorted-low)	Voltage	2nd cycle	Activation command	One Type1 cycle	Type1	
	P0265	Circuit continuity (Shorted-high)	Current	2nd cycle	Activation command	One Type1 cycle	Type1	
	P0267	Circuit continuity (Open/Shorted-low)	Voltage	2nd cycle	Activation command	One Type1 cycle	Type1	
	P0268	Circuit continuity (Shorted-high)	Current	2nd cycle	Activation command	One Type1 cycle	Type1	
	P0270	Circuit continuity (Open/Shorted-low)	Voltage	2nd cycle	Activation command	One Type1 cycle	Type1	
	P0271	Circuit continuity (Shorted-high)	Current	2nd cycle	Activation command	One Type1 cycle	Type1	
	P0261	Circuit continuity (Open/Shorted-low)	Voltage	1st cycle	Activation command	One Type1 cycle	Type1	*
	P0262	Circuit continuity (Shorted-high)	Current	1st cycle	Activation command	One Type1 cycle	Type1	*
	P0264	Circuit continuity (Open/Shorted-low)	Voltage	1st cycle	Activation command	One Type1 cycle	Type1	*
	P0265	Circuit continuity (Shorted-high)	Current	1st cycle	Activation command	One Type1 cycle	Type1	*
	P0267	Circuit continuity (Open/Shorted-low)	Voltage	1st cycle	Activation command	One Type1 cycle	Type1	*
	P0268	Circuit continuity (Shorted-high)	Current	1st cycle	Activation command	One Type1 cycle	Type1	*
	P0270	Circuit continuity (Open/Shorted-low)	Voltage	1st cycle	Activation command	One Type1 cycle	Type1	*
	P0271	Circuit continuity (Shorted-high)	Current	1st cycle	Activation command	One Type1 cycle	Type1	*
Fuel pressure Solenoid	P0090	Circuit continuity	Voltage	2nd cycle	Battery voltage	–	Type1	
Wastegate Solenoid	P0243	Circuit continuity	Voltage	2nd cycle	Battery voltage	One Type1 cycle	Type1	
Wastegate Solenoid1	P0243	Circuit continuity	Voltage	2nd cycle	Battery voltage	One Type1 cycle	Type1	
Wastegate Solenoid2	P0247	Circuit continuity	Voltage	2nd cycle	Battery voltage	One Type1 cycle	Type1	
Misfire	P0300-P0303	Crankshaft speed fluctuation	Percentage of misfire per 1000rev.	2nd cycle	Engine speed, Load value*1, Coolant temp., Barometric pressure	One Type1 cycle	Type1	
			Percentage of misfire per 200rev. (Catalyst damage)	1st cycle	Engine speed, Load value*1, Coolant temp., Barometric pressure	-	Type1	
			Percentage of misfire per 200rev. (Catalyst damage)	2nd cycle	Engine speed, Load value*1, Coolant temp., Barometric pressure	One Type1 cycle	Type1	
	P0300-P0304	Crankshaft speed fluctuation	Percentage of misfire per 1000rev.	2nd cycle	Engine speed, Load value*1, Coolant temp., Barometric pressure	One Type1 cycle	Type1	
			Percentage of misfire per 200rev. (Catalyst damage)	1st cycle	Engine speed, Load value*1, Coolant temp., Barometric pressure	-	Type1	
			Percentage of misfire per 200rev. (Catalyst damage)	2nd cycle	Engine speed, Load value*1, Coolant temp., Barometric pressure	One Type1 cycle	Type1	
Knock Sensor	P0325	Range check	Voltage	2nd cycle	Time after engine start-up	One Type1 cycle	Type1	
	P0327	Range check-min	Voltage	2nd cycle	Time after engine start-up	One Type1 cycle	Type1	
	P0328	Range check-max	Voltage	2nd cycle	Time after engine start-up	One Type1 cycle	Type1	
Crankshaft position sensor	P0335	Circuit continuity, Rationality	Alignment to camshaft	1st cycle	Engine speed	-	Type1	
	P0335	Circuit continuity, Rationality	Alignment to camshaft	2nd cycle	Engine speed	-	Type1	
	P061C	Plausibility	Engine speed	1st cycle	Engine speed	-	Type1	
	P1967	Plausibility	Engine speed	1st cycle	Engine speed	-	Type1	
Camshaft position sensor	P0340	Circuit continuity, Rationality	Alignment to crankshaft	1st cycle	Engine speed	-	Type1	
	P0340	Circuit continuity, Rationality	Alignment to crankshaft	2nd cycle	Engine speed	-	Type1	
Exhaust camshaft position sensor	P0365	Circuit continuity, Rationality	Alignment to crankshaft	1st cycle	Engine speed	-	Type1	
Catalyst	P0420	Deterioration	Oxygen sensor switching frequency ratio	2nd cycle	Engine speed, Air flow rate, Fuel system, Vehicle speed, Intake air temp., Barometric pressure	One Type1 cycle	Type1	
	P0421	Deterioration	Oxygen sensor switching frequency ratio	2nd cycle	Engine speed, Air flow rate, Fuel system, Vehicle speed, Intake air temp., Barometric pressure	One Type1 cycle	Type1	

* : Only applied for CW0 with Plug-in-hybrid model.

*1: Charge efficiency for vehicles equipped with air flow sensor,
Manifold pressure for vehicles without air flow sensor

Component	Fault code	Monitoring Strategy	Fault detection Criteria	MI activation criteria	Secondary Parameters	Precondition	Demo. test
Evaporative purge valve	P0443	Circuit continuity	Voltage	2nd cycle	Battery voltage	One Type1 cycle	Type1
	P0458	Circuit continuity (Open/Shorted-low)	Voltage	2nd cycle	Battery voltage	One Type1 cycle	Type1
	P0459	Circuit continuity (Shorted-high)	Current	2nd cycle	Battery voltage	One Type1 cycle	Type1
EGR motor	P0489	Circuit continuity (Open/Shorted-low)	Voltage	2nd cycle	Battery voltage	One Type1 cycle	Type1
	P0490	Circuit continuity (Shorted-high)	Voltage	2nd cycle	Battery voltage	One Type1 cycle	Type1
Vehicle speed sensor	P0500	Circuit continuity	Vehicle speed	1st cycle	Battery voltage, Time after engine start-up	-	Type1
	P0500	Circuit continuity	Vehicle speed	2nd cycle	Engine speed, Load value	-	Type1
Brake booster pressure sensor	P0557	Range check-min	Voltage	2nd cycle	Battery voltage	One Type1 cycle	Type1
	P0558	Range check-max	Voltage	2nd cycle	Battery voltage	One Type1 cycle	Type1
Non-volatile memory	P0602	Coding status	Not programmed	1st cycle	Ignition on	-	Type1
	P1630	Coding status	Not programmed	1st cycle	Ignition on	-	Type1
	P062F	Communication	Data check	1st cycle	Ignition on	-	Type1
	P0630	VIN status	Not programmed	1st cycle	Ignition on	-	Type1
Powertrain control module (PCM)	P0606	ROM check	ROM data	1st cycle	Ignition on	-	Type1
	P060B	A/D converter check	A/D data	1st cycle	Ignition on	-	Type1
	P1964	A/D converter check	A/D data	1st cycle	Ignition on	-	Type1
Accelerator position sensor (APS)	P060D	Rationality (APS-main, sub)	Relation between main and sub	1st cycle	Ignition on	-	Type1
	P1965	Rationality (APS-main, sub)	Relation between main and sub	1st cycle	Ignition on	-	Type1
	P2122	Range check-min (APS-main)	Voltage	1st cycle	Ignition on	-	Type1
	P2123	Range check-max (APS-main)	Voltage	1st cycle	Ignition on	-	Type1
	P2127	Range check-min (APS-sub)	Voltage	1st cycle	Ignition on	-	Type1
	P2128	Range check-max (APS-sub)	Voltage	1st cycle	Ignition on	-	Type1
	P2138	Rationality (APS-main, sub)	Relation between main and sub	1st cycle	Ignition on	-	Type1
Torque monitor	P061A	Torque check	Actual and calculated torque	1st cycle	Engine speed, Load value*1	-	Type1
	P1970	Torque check	Actual and calculated torque	1st cycle	Engine speed, Load value	-	Type1
Electronic throttle valve (ETV)	P0638	Rationality	Throttle position sensor signal	1st cycle	Battery voltage	-	Type1
	P0657	Circuit continuity	Voltage	1st cycle	Battery voltage	-	Type1
	P2100	ETV motor function	Throttle position sensor signal	1st cycle	Battery voltage	-	Type1
	P2101	Circuit continuity	Current	1st cycle	Battery voltage	-	Type1
	P1978	Circuit continuity	Current	1st cycle	Battery voltage	-	Type1

*1: Charge efficiency for vehicles equipped with air flow sensor,
Manifold pressure for vehicles without air flow sensor

Component	Fault code	Monitoring Strategy	Fault detection Criteria	MI activation criteria	Secondary Parameters	Precondition	Demo. test
Throttle position sensor source	P0642	Range check-min	Voltage	1st cycle	Battery voltage	-	Type1
Variable valve lift(VVL) system	P1040	Learning status	Learning status	1st cycle	Ignition on	-	Type1
Variable lift actuator (VLA)	P1041	Supply voltage circuit continuity	Voltage	1st cycle	Ignition on	-	Type1
	P2646	VVL target error	Actual and target control shaft angle	1st cycle	Ignition on	-	Type1
	P2648	Circuit continuity	Current	1st cycle	Ignition on	-	Type1
	P2649	Circuit over current	Current	1st cycle	Ignition on	-	Type1
	P265B	Circuit continuity	Curent	1st cycle	Ignition on	-	Type1
Keep alive memory	P1603	Circuit continuity	Voltage	1st cycle	Battery voltage, Engine running	-	Type1
Barometric Pressure Sensor	P2228	Circuit continuity (Range check-min)	Pressure	1st cycle	Battery voltage Time after engine start-up	-	Type1
	P2229	Circuit continuity (Range check-max)	Pressure	1st cycle	Battery voltage Time after engine start-up	-	Type1
	P0105	Circuit continuity	Pressure	1st cycle	Battery voltage Time after engine start-up	-	Type1
Oxygen sensor offset voltage	P2252	Range check-min	Voltage	2nd cycle	Time after engine start-up	One Type1 cycle	Type1
	P2253	Range check-max	Voltage	2nd cycle	Time after engine start-up	One Type1 cycle	Type1
Valve lift sensor(VLS)	P264B	Rationality	Control shaft angle (VLA vs VLS)	2nd cycle	Ignition on	One Type1 cycle	Type1
	P264C	Range check-min	Voltage	1st cycle	Battery voltage	-	Type1
	P264D	Range check-max	Voltage	1st cycle	Battery voltage	-	Type1
Controller area network	P1590	Communication	Communication data rational (PCM and T/M ECU)	1st cycle	Battery voltage	-	Type1
	U0101	Communication	Communication status (PCM and T/M ECU)	1st cycle	Battery voltage	-	Type1
	U011B	Communication	Communication status (PCM and VLC ECU)	1st cycle	Battery voltage	-	Type1
	U0121	Communication	Communication status (PCM and ABS ECU)	1st cycle	Battery voltage	-	Type1
	U0141	Communication	Communication status (PCM and Gateway ECU)	1st cycle	Battery voltage	-	Type1
	U0155	Communication	Communication status (PCM and Combi Meter)	1st cycle	Battery voltage	-	Type1
	U1108	Communication	Communication status (PCM and Combi Meter)	1st cycle	Battery voltage	-	Type1
	U0293	Communication	Communication status (Hybrid Powertrain ECU)	1st cycle	Battery voltage	-	Type1
	U0594	Communication	Communication data rational (Hybrid Powertrain ECU)	1st cycle	Battery voltage	-	Type1

*1: Charge efficiency for vehicles equipped with air flow sensor,
Manifold pressure for vehicles without air flow sensor

List of monitoring Items for T/M

<CVT> for CY0, CX0, CW0, GA0, CG0, CH0, GF0, GB0, GC0

Component	Fault code	Monitoring Strategy	Fault detection Criteria	MI activation criteria	Secondary Parameters	Precondition	Demo. test
Transmission range sensor A (PRNDL Input)	P0705	Rationality	T/M range switch input	2nd cycle	Accelerator position Engine speed Battery voltage	One Type1 cycle	Type1
		Circuit continuity			Vehicle speed Accelerator position Engine speed Battery voltage		
Transmission fluid temperature sensor A	P0711	Rationality	Continuous time	2nd cycle	Fluid temperature T/M Range Switch "D" Accelerator position Vehicle speed Engine speed	One Type1 cycle	Type1
	P0712	Circuit continuity-ground	Fluid temperature	1st cycle	Battery voltage	-	Type1
	P0713	Circuit continuity-open	Fluid temperature	1st cycle	Vehicle speed Battery voltage	-	Type1
Input shaft speed sensor A [odd]	P0715	Circuit continuity-Open/Low-revolution	Input shaft speed	1st cycle	T/M range switch "D" Output shaft speed Accelerator position Engine speed Battery voltage	-	Type1
		Circuit continuity-open			T/M range switch "D" Input shaft speed Accelerator position Engine speed Battery voltage		
		Rationality	Input Shaft speed Engine speed		Transmission range switch "D" Accelerator position Engine speed System voltage TCC status		
Output shaft speed sensor	P0720	Circuit continuity-Open/Low-revolution	Output shaft speed	1st cycle	T/M range switch "D" Input shaft speed Accelerator position Battery voltage	-	Type1
		Circuit continuity-open			T/M range switch "D" Output shaft speed Accelerator position Battery voltage		
Input or Output shaft speed sensor	P1723	Rationality	Input or Output shaft speed sensor signal	1st cycle	Battery voltage	-	Type1

List of monitoring Items for T/M

<CVT> for CY0, CX0, CW0, GA0, CG0, CH0, GF0, GB0, GC0

Component	Fault code	Monitoring Strategy	Fault detection Criteria	MI activation criteria	Secondary Parameters	Precondition	Demo. test
Engine speed signal	P0725	Rationality-Low	Engine speed signal	2nd cycle	T/M range switch "D" Input shaft speed Accelerator position Battery voltage	One Type1 cycle	Type1
		Rationality-High	Engine speed Input shaft speed Output shaft speed	2nd cycle	T/M range switch "D" Input shaft speed Output shaft speed Accelerator position Battery voltage	One Type1 cycle	Type1
Transmission fluid pressure sensor A	P0840	Circuit continuity-open	Voltage	1st cycle	Fluid temperature	-	Type1
		Circuit continuity-ground					
	P0841	Rationality-Low	Target fluid pressure Actual fluid pressure	1st cycle	T/M range switch "D" Accelerator position Engine speed Fluid temperature Battery voltage	-	Type1
Transmission fluid pressure low	P0868	Rationality	Target fluid pressure Actual fluid pressure	1st cycle	Engine speed Battery voltage	-	Type1
Torque converter clutch solenoid	P0740	Circuit continuity-open	Solenoid actual current	1st cycle	Solenoid target current	-	Type1
		Circuit continuity-ground					
	P0741	Rationality	Fluid pressure Engine speed Input shaft speed	2nd cycle	T/M range switch "D" Accelerator position Engine speed Fluid temperature Battery voltage	One Type1 cycle	Type1
Torque converter clutch or select switch solenoid	P1740	Circuit continuity-open	Voltage	2nd cycle	Activation command off	One Type1 cycle	Type1
		Circuit continuity-ground			Activation command on		

List of monitoring Items for T/M

<CVT> for CY0, CX0, CW0, GA0, CG0, CH0, GF0, GB0, GC0

Component	Fault code	Monitoring Strategy	Fault detection Criteria	MI activation criteria	Secondary Parameters	Precondition	Demo. test
Pressure control solenoid A	P0745	Circuit continuity-open Circuit continuity-ground	Solenoid actual current	2nd cycle	Solenoid target current	One Type1 cycle	Type1
Pressure control solenoid A	P0746	Rationality	Gear Ratio	1st cycle	T/M range switch "D" Accelerator position Engine speed Fluid temperature Battery voltage	-	Type1
Pressure control solenoid B	P0778	Circuit continuity-open Circuit continuity-ground	Solenoid actual current	2nd cycle	Solenoid target current	One Type1 cycle	Type1
EEPROM (OBD)	P1637	Rationality	Checksum	1st cycle	Battery voltage	-	Type1
Brake switch B	P0703	Rationality	Brake switch signal	1st cycle	Vehicle speed Battery voltage	-	Type1
Accelerator position signal	P1706	Malfunction of-accelerator-position signal	Accelerator position-signal	1st cycle	T/M Range Switch "D" Battery voltage	-	Type1
ABS status	P1773	ABS malfunction	ABS status signal	2nd cycle	Time after TCM start Battery voltage	One Type1 cycle	Type1
Stepping motor	P1777	Circuit continuity-open Circuit continuity-ground	Circuit Voltage	1st cycle	Activation command off Activation command on	-	Type1
Stepping motor (Performance)	P1778	Rationality	Output Shaft speed Target ratio Input Shaft speed	2nd cycle	Transmission range switch Vehicle Speed Accelerator position Engine speed	One Type1 cycle	Type1
Ds position Switch	P071B	Circuit continuity	Ds position Switch input	2nd cycle	Battery voltage T/M Range Switch "P"or"R"or"N"	One Type1 cycle	Type1
Electronic Oil Pump	P0942	Electronic Oil Pump malfunction	Electronic Oil Pump state signal	2nd cycle	Battery voltage	One Type1 cycle	Type1
	P0944	Rationality	Fluid Line pressure	2nd cycle	Battery voltage	One Type1 cycle	Type1
Electronic Oil Pump Relay	P0946	Circuit continuity	Electronic Oil Pump Relay status	2nd cycle	Battery voltage	One Type1 cycle	Type1
Controller area network	U0001	Malfunction CAN line	CAN communication	1st cycle	Time after TCM start Battery voltage	-	Type1
	U0100	CAN communication status (ENG-ECU)	CAN signal from ENG-ECU	1st cycle	Time after TCM start Battery voltage	-	Type1

List of monitoring Items for T/M

<CVT> for A00, A10

Component	Fault code	Monitoring Strategy	Fault detection Criteria	MI activation criteria	Secondary Parameters	Precondition	Demo. test
Transmission range sensor A (PRNDL Input)	P0705	Rationality	T/M range switch input	2nd cycle	Battery voltage	One Type1 cycle	Type1
		Circuit continuity			Battery voltage Vehicle speed		
Transmission fluid temperature sensor A	P0712	Range check Min	Fluid temperature	2nd cycle	Battery voltage	One Type1 cycle	Type1
	P0713	Range check Max	Fluid temperature	2nd cycle	Battery voltage Vehicle speed	One Type1 cycle	Type1
Input shaft speed sensor A	P0715	Circuit continuity-Low	Input shaft speed	2nd cycle	Battery voltage Secondary shaft speed	One Type1 cycle	Type1
		Circuit continuity-Low			Battery voltage		
Intermediate shaft speed sensor A	P0791	Circuit continuity-Low	Intermediate shaft speed	2nd cycle	Battery voltage Input shaft speed	One Type1 cycle	Type1
		Circuit continuity-Low			Battery voltage		
Output shaft speed sensor	P0720	Circuit continuity-Low	Output shaft speed	2nd cycle	Battery voltage T/M range switch Intermediate shaft speed Input shaft speed	One Type1 cycle	Type1
		Circuit continuity-Low			Battery voltage		
Transmission fluid pressure sensor A	P0841	Rationality	Target fluid pressure Actual fluid pressure	2nd cycle	Battery voltage T/M range switch Vehicle speed Accelerator position	One Type1 cycle	Type1
	P0842	Circuit continuity-Low	Voltage	2nd cycle	Battery voltage Fluid temperature	One Type1 cycle	Type1
	P0843	Circuit continuity-High	Voltage	2nd cycle	Battery voltage Fluid temperature Target fluid pressure	One Type1 cycle	Type1
Ds switch	P071B	Rationality	Ds switch input	2nd cycle	Battery voltage T/M range switch	One Type1 cycle	Type1

List of monitoring Items for T/M

<CVT> for A00, A10

Component	Fault code	Monitoring Strategy	Fault detection Criteria	MI activation criteria	Secondary Parameters	Precondition	Demo. test
Pressure control solenoid A	P0746	Rationality	Input shaft speed Intermediate shaft speed	2nd cycle	T/M range switch Engine speed Input shaft speed Acceleration	One Type1 cycle	Type1
	P0962	Circuit continuity-Low	Actual current	2nd cycle	Battery voltage	One Type1 cycle	Type1
	P0963	Circuit continuity-High	Actual current	2nd cycle	Battery voltage Target current	One Type1 cycle	Type1
Pressure control solenoid C	P0796	Rationality	Actual ratio	2nd cycle	T/M range switch Engine speed Vehicle speed Target ratio	One Type1 cycle	Type1
	P0970	Circuit continuity-Low	Actual current	2nd cycle	Battery voltage	One Type1 cycle	Type1
	P0971	Circuit continuity-High	Actual current	2nd cycle	Battery voltage Target current	One Type1 cycle	Type1
Torque converter clutch	P0741	Rationality	Engine speed Input shaft speed	2nd cycle	Battery voltage TCC status Target TCC fluid pressure	One Type1 cycle	Type1
Torque converter clutch Pressure control solenoid	P2763	Circuit continuity-High	Actual current	2nd cycle	Battery voltage Target current	One Type1 cycle	Type1
	P2764	Circuit continuity-Low	Actual current	2nd cycle	Battery voltage	One Type1 cycle	Type1

List of monitoring Items for T/M

<CVT> for A00, A10

Component	Fault code	Monitoring Strategy	Fault detection Criteria	MI activation criteria	Secondary Parameters	Precondition	Demo. test
Shift solenoid A	P0973	Circuit continuity-Low	Actual current	2nd cycle	Battery voltage	One Type1 cycle	Type1
	P0974	Circuit continuity-High	Actual current	2nd cycle	Battery voltage Target current	One Type1 cycle	Type1
Shift solenoid B	P0976	Circuit continuity-Low	Actual current	2nd cycle	Battery voltage	One Type1 cycle	Type1
	P0977	Circuit continuity-High	Actual current	2nd cycle	Battery voltage Target current	One Type1 cycle	Type1
Clutch A pressure	P2857	Rationality Engagement -performance	Auxiliary gear ratio	2nd cycle	Battery voltage T/M range switch Accelerator position Auxiliary gearbox status Engine speed Intermediate shaft speed Output shaft speed	One Type1 cycle	Type1
	P2859	Rationality Disengagement -performance	Auxiliary gear ratio Deceleration	2nd cycle	Battery voltage T/M range switch Vehicle speed Auxiliary gearbox status Engine speed Intermediate shaft speed Output shaft speed	One Type1 cycle	Type1
		Rationality Disengagement -performance	Auxiliary gear ratio	2nd cycle	Battery voltage T/M range switch Accelerator position Auxiliary gearbox status Engine speed Intermediate shaft speed Output shaft speed	One Type1 cycle	Type1
		Rationality Disengagement -performance (Detected by Oil-pressure switch)	Clutch B oil pressure switch status	2nd cycle	Auto stop status T/M range switch Engine speed Vehicle speed Auxiliary gearbox status	One Type1 cycle	Type1

List of monitoring Items for T/M

<CVT> for A00, A10

Component	Fault code	Monitoring Strategy	Fault detection Criteria	MI activation criteria	Secondary Parameters	Precondition	Demo. test
Clutch B pressure	P2858	Rationality Engagement -performance	Auxiliary gear ratio	2nd cycle	Battery voltage T/M range switch Accelerator position Auxiliary gearbox status Engine speed Intermediate shaft speed Output shaft speed	One Type1 cycle	Type1
	P285A	Rationality Disengagement -performance	Auxiliary gear ratio Deceleration	2nd cycle	Battery voltage T/M range switch Vehicle speed Auxiliary gearbox status Engine speed Intermediate shaft speed Output shaft speed	One Type1 cycle	Type1
		Rationality Disengagement -performance	Auxiliary gear ratio	2nd cycle	Battery voltage T/M range switch Accelerator position Auxiliary gearbox status Engine speed Intermediate shaft speed Output shaft speed	One Type1 cycle	Type1
TCM power relay sensor	P1607	Rationality-Low	Battery voltage(CAN)	2nd cycle	TCM Power supply voltage	One Type1 cycle	Type1
EEPROM	P1637	Rationality	Checksum	2nd cycle	Time after TCM start	One Type1 cycle	Type1
Controller area network	U0001	Malfunction CAN line	CAN communication	1st cycle	Time after TCM start Battery voltage	-	Type1
	U0100	CAN communication status (ENG-ECU)	CAN signal from ENG-ECU	1st cycle	Time after TCM start Battery voltage	-	Type1

List of monitoring Items for T/M

<6AMT> for Z30

OBD FAMILY MMC-EOBD-G11-01	Fault code	Monitoring Strategy	Fault detection Criteria	MI activation criteria	Secondary Parameters	Precondition	Demo. test
Speed of Non-Powered axle	P1847	Signal Error	Speed signal provided error value Speed signals showed abnormal gradient	3rd cycle		One type1 cycle	Type1
Gearbox Encoder No.1 Errors	P1860	Range check Max	Position Value upper limit	3rd cycle		One type1 cycle	Type1
	P1861	Range check Min	Position Value low limit	3rd cycle		One type1 cycle	Type1
	P1862	Gradient	Abnormal Position Gradient	3rd cycle		One type1 cycle	Type1
Gearbox Encoder No.2 Errors	P1865	Range check Max	Position Value upper limit	3rd cycle		One type1 cycle	Type1
	P1866	Range check Min	Position Value low limit	3rd cycle		One type1 cycle	Type1
	P1867	Gradient	Abnormal Position Gradient	3rd cycle		One type1 cycle	Type1
Gearbox Potentiometer No.1 Errors	P1870	Range check Min	Voltage of Poti SD1	3rd cycle		One type1 cycle	Type1
	P1871	Range check Max	Voltage of Poti SD1	3rd cycle		One type1 cycle	Type1
	P1872	Gradient	Voltage of Poti SD1	3rd cycle		One type1 cycle	Type1
	P1873	No signal	Voltage of Poti SD1	3rd cycle		One type1 cycle	Type1
Gearbox Potentiometer No.2 Errors	P1875	Range check Max	Voltage of Poti SD2	3rd cycle		One type1 cycle	Type1
	P1876	Range check Min	Voltage of Poti SD2	3rd cycle		One type1 cycle	Type1
	P1877	Gradient	Voltage of Poti SD2	3rd cycle		One type1 cycle	Type1
	P1878	No signal	Voltage of Poti SD2	3rd cycle		One type1 cycle	Type1
Gearbox Speed Plausibility	P1888	Comparison	Input Shaft Speed	3rd cycle	Engine Speed	One type1 cycle	Type1
Clutch Position Sensor	P1710	Signal Error	Clutch Poti Sensor	3rd cycle		One type1 cycle	Type1

List of monitoring Items for T/M

<6AMT> for CY0, CX0, CZ0

OBD FAMILY MMC-EOBD-G11-01	Fault code	Monitoring Strategy	Fault detection Criteria	MI activation criteria	Secondary Parameters	Precondition	Demo. test
Transmission fluid temperature sensor A	P0711	Rationality-gradient	Fluid temperature	2nd cycle	Battery voltage	One Type1 cycle	Type1
	P0712	Range check-min	Fluid temperature	2nd cycle	Battery voltage	One Type1 cycle	Type1
	P0713	Range check-max	Fluid temperature	2nd cycle	Battery voltage	One Type1 cycle	Type1
Transmission fluid temperature sensor B	P2741	Rationality-gradient	Fluid temperature	2nd cycle	Battery voltage	One Type1 cycle	Type1
	P2742	Range check-min	Fluid temperature	2nd cycle	Battery voltage	One Type1 cycle	Type1
	P2743	Range check-max	Fluid temperature	2nd cycle	Battery voltage	One Type1 cycle	Type1
Transmission fluid temperature sensor A & B	P1808	Rationality-deviation	Fluid temperature deviation between sensor A & B	1st cycle	Battery voltage	-	Type1
Input shaft speed sensor A [odd]	P0715	Range check-max	Current	2nd cycle	Battery voltage Time after engine start-up	One Type1 cycle	Type1
	P0717	Range check-min	Current	2nd cycle	Battery voltage Time after engine start-up	One Type1 cycle	Type1
	P0716	Rationality	Input shaft 1 [odd] speed	2nd cycle	Battery voltage Input shaft 1 [odd] gear Input shaft 2 [even] gear	One Type1 cycle	Type1
Input shaft speed sensor B [even]	P2766	Rationality	Input shaft 2 [even] speed	2nd cycle	Battery voltage Input shaft 1 [odd] gear Input shaft 2 [even] gear	One Type1 cycle	Type1
Damper speed sensor	P1875	Rationality	Damper speed	2nd cycle	Battery voltage Engine speed Time after engine start-up	One Type1 cycle	Type1
Transmission fluid pressure sensor A	P0841	Rationality	Clutch 1 [odd] torque	2nd cycle	Battery voltage Engine speed Time after engine start-up	One Type1 cycle	Type1
	P0842	Range check-min	Voltage	2nd cycle	Battery voltage	One Type1 cycle	Type1
	P0843	Range check-max	Voltage	2nd cycle	Battery voltage	One Type1 cycle	Type1
Transmission fluid pressure sensor B	P0846	Rationality	Clutch 2 [even] torque	2nd cycle	Battery voltage Engine speed Time after engine start-up	One Type1 cycle	Type1
	P0847	Range check-min	Voltage	2nd cycle	Battery voltage	One Type1 cycle	Type1
	P0848	Range check-max	Voltage	2nd cycle	Battery voltage	One Type1 cycle	Type1
Shift solenoid A	P0753	Circuit-open	Voltage	1st cycle	Battery voltage	-	Type1
	P0973	Circuit-low	Voltage	1st cycle	Battery voltage	-	Type1
	P0794	Circuit-high	Voltage	1st cycle	Battery voltage	-	Type1
Shift solenoid B	P0758	Circuit-open	Voltage	1st cycle	Battery voltage	-	Type1
	P0976	Circuit-low	Voltage	1st cycle	Battery voltage		
Pressure control solenoid A	P0746	Rationality	Current	1st cycle	Battery voltage	-	Type1
	P0960	Circuit-open	Voltage	1st cycle	Battery voltage	-	Type1
	P0961	Rationality-over current	Voltage Current	1st cycle	Battery voltage	-	Type1
	P0962	Circuit-low	Voltage	1st cycle	Battery voltage	-	Type1
	P0963	Circuit-high	Voltage	1st cycle	Battery voltage Activation command of PCS*1-A	-	Type1
Pressure control solenoid B	P0776	Rationality	Current	1st cycle	Battery voltage Engine speed Time after engine start-up	-	Type1
	P0777	Stuck	Fluid pressure	1st cycle	Battery voltage Engine speed Time after engine start-up Clutch 1 [odd] pressure Clutch 2 [even] pressure	-	Type1
	P0964	Circuit-open	Voltage	1st cycle	Battery voltage	-	Type1
	P0965	Rationality-over current	Voltage Current	1st cycle	Battery voltage	-	Type1
	P0966	Circuit-low	Voltage	1st cycle	Battery voltage	-	Type1
	P0967	Circuit-high	Voltage	1st cycle	Battery voltage Activation command of PCS-B	-	Type1
Pressure control solenoid C	P0968	Circuit-open	Voltage	1st cycle	Battery voltage	-	Type1
	P0970	Circuit-low	Voltage	1st cycle	Battery voltage	-	Type1
	P0971	Circuit-high	Voltage	1st cycle	Battery voltage Activation command of PCS-C	-	Type1

*1: Pressure Control Solenoid

List of monitoring Items for T/M

<6AMT> for CY0, CX0, CZ0

Component	Fault code	Monitoring Strategy	Fault detection Criteria	MI activation criteria	Secondary Parameters	Precondition	Demo. test
Pressure control solenoid D	P2718	Circuit-open	Voltage	1st cycle	Battery voltage	-	Type1
	P2719	Rationality-over current	Voltage Current	1st cycle	Battery voltage	-	Type1
	P2720	Circuit-low	Voltage	1st cycle	Battery voltage	-	Type1
	P2721	Circuit-high	Voltage	1st cycle	Battery voltage Activation command of PCS-D	-	Type1
Pressure control solenoid E	P2727	Circuit-open	Voltage	1st cycle	Battery voltage	-	Type1
	P2728	Rationality-over current	Voltage Current	1st cycle	Battery voltage	-	Type1
	P2729	Circuit-low	Voltage	1st cycle	Battery voltage	-	Type1
	P2730	Circuit-high	Voltage	1st cycle	Battery voltage Activation command of PCS-E	-	Type1
Pressure control solenoid F	P2733	Stuck	Fluid pressure	1st cycle	Battery voltage Engine speed Time after engine start-up Activation command of PCS-B, D, F and G	-	Type1
	P2736	Circuit-open	Voltage	1st cycle	Battery voltage	-	Type1
	P2738	Circuit-low	Voltage	1st cycle	Battery voltage	-	Type1
	P2739	Circuit-high	Voltage	1st cycle	Battery voltage Activation command of PCS-F	-	Type1
Pressure control solenoid G	P2809	Stuck	Fluid pressure	1st cycle	Battery voltage Engine speed Time after engine start-up Activation command of PCS-B, E and G	-	Type1
	P2812	Circuit-open	Voltage	1st cycle	Battery voltage	-	Type1
	P2814	Circuit-low	Voltage	1st cycle	Battery voltage	-	Type1
	P2815	Circuit-high	Voltage	1st cycle	Battery voltage Activation command of PCS-G	-	Type1
EEPROM (OBD)	P1637	Rationality	Checksum	1st cycle	Battery voltage	-	Type1
Shift fork position sensor 1 & 2 supply	P1804	Rationality-low	Voltage	1st cycle	Battery voltage	-	Type1
	P1805	Rationality-high	Voltage	1st cycle	Battery voltage	-	Type1
Shift fork position sensor 3 & 4 supply	P1806	Rationality-low	Voltage	1st cycle	Battery voltage	-	Type1
	P1807	Rationality-high	Voltage	1st cycle	Battery voltage	-	Type1
Clutch 1 [odd]	P181B	Rationality-low	Fluid pressure	2nd cycle	Battery voltage Engine speed Time after engine start-up Clutch 1 [odd] state Activation command of PCS-D	One Type1 cycle	Type1
	P181C	Rationality-high	Fluid pressure	2nd cycle	Engine speed Time after engine start-up Clutch 1 [odd] state Target pressure	One Type1 cycle	Type1
	P1859	Functional check	Disengage time	2nd cycle	Battery voltage Engine speed Time after engine start-up Clutch 1 [odd] state	One Type1 cycle	Type1
Clutch 2 [even]	P181E	Rationality-low	Fluid pressure	2nd cycle	Battery voltage Engine speed Time after engine start-up Clutch 2 [even] state Activation command of PCS-E	One Type1 cycle	Type1
	P181F	Rationality-high	Fluid pressure	2nd cycle	Engine speed Time after engine start-up Clutch 2 [even] state Target pressure	One Type1 cycle	Type1
	P185B	Functional check	Disengage time	2nd cycle	Battery voltage Engine speed Time after engine start-up Clutch 2 [even] state	One Type1 cycle	Type1

List of monitoring Items for T/M

<6AMT> for CY0, CX0, CZ0

Component	Fault code	Monitoring Strategy	Fault detection Criteria	MI activation criteria	Secondary Parameters	Precondition	Demo. test
Shift fork 1 position sensor	P1820	Range check-min	Voltage	1st cycle	Battery voltage	-	Type1
	P1821	Range check-max	Voltage	1st cycle	Battery voltage	-	Type1
	P1822	Rationality-range error	Digitized sensor value	1st cycle	Battery voltage Engine speed Time after engine start-up Shift system status	-	Type1
	P1823	Rationality-neutral plausibility	Synchronizer slip speed	1st cycle	Battery voltage Engine speed Time after engine start-up Input shaft 1 [odd] speed Input shaft 2 [even] speed Input shaft 2 [even] gear Shift fork 1 gear	-	Type1
	P1824	Rationality-plausibility failure	Shift fork position	2nd cycle	Battery voltage Engine speed Time after engine start-up Input shaft 1 [odd] speed Shift fork 1 gear Requested shift fork Clutch 1 [odd] transmit torque	One Type1 cycle	Type1
Shift fork 2 position sensor	P1825	Range check-min	Voltage	1st cycle	Battery voltage	-	Type1
	P1826	Range check-max	Voltage	1st cycle	Battery voltage	-	Type1
	P1827	Rationality-range error	Digitized sensor value	1st cycle	Battery voltage Engine speed Time after engine start-up Shift system status	-	Type1
	P1828	Rationality-neutral plausibility	Synchronizer slip speed	1st cycle	Battery voltage Engine speed Time after engine start-up Input shaft 1 [odd] speed Input shaft 2 [even] speed Input shaft 2 [even] gear Shift fork 2 gear	-	Type1
	P1829	Rationality-plausibility failure	Shift fork position	2nd cycle	Battery voltage Engine speed Time after engine start-up Input shaft 1 [odd] speed Shift fork 2 gear Requested shift fork Clutch 1 [odd] transmit torque	One Type1 cycle	Type1
Shift fork 3 position sensor	P182A	Range check-min	Voltage	1st cycle	Battery voltage	-	Type1
	P182B	Range check-max	Voltage	1st cycle	Battery voltage	-	Type1
	P182C	Rationality-range error	Digitized sensor value	1st cycle	Battery voltage Engine speed Time after engine start-up Shift system status	-	Type1
	P182D	Rationality-neutral plausibility	Synchronizer slip speed	1st cycle	Battery voltage Engine speed Time after engine start-up Input shaft 1 [odd] speed Input shaft 2 [even] speed Input shaft 1 [odd] gear Shift fork 3 gear	-	Type1
	P182E	Rationality-plausibility failure	Shift fork position	2nd cycle	Battery voltage Engine speed Time after engine start-up Input shaft 2 [even] speed Shift fork 3 gear Requested shift fork Clutch 2 [even] transmit torque	One Type1 cycle	Type1

List of monitoring Items for T/M

<6AMT> for CY0, CX0, CZ0

Component	Fault code	Monitoring Strategy	Fault detection Criteria	MI activation criteria	Secondary Parameters	Precondition	Demo. test
Shift fork 4 position sensor	P1831	Range check-min	Voltage	1st cycle	Battery voltage	-	Type1
	P1832	Range check-max	Voltage	1st cycle	Battery voltage	-	Type1
	P1833	Rationality-range error	Digitized sensor value	1st cycle	Battery voltage Engine speed Time after engine start-up Shift system status	-	Type1
	P1834	Rationality-neutral plausibility	Synchronizer slip speed	1st cycle	Battery voltage Engine speed Time after engine start-up Input shaft 1 [odd] speed Input shaft 2 [even] speed Input shaft 1 [odd] gear Shift fork 4 gear	-	Type1
	P1835	Rationality-plausibility failure	Shift fork position	2nd cycle	Battery voltage Engine speed Time after engine start-up Input shaft 2 [even] speed Shift fork 4 gear Requested shift fork Clutch 2 [even] transmit torque	One Type1 cycle	Type1
Shift fork 1	P1836	Functional check	Shift fork position	1st cycle	Battery voltage Engine speed Time after engine start-up Requested shift fork	-	Type1
Shift fork 2	P183D	Functional check	Shift fork position	1st cycle	Battery voltage Engine speed Time after engine start-up Requested shift fork	-	Type1
Shift fork 3	P1844	Functional check	Shift fork position	1st cycle	Battery voltage Engine speed Time after engine start-up Requested shift fork	-	Type1
Shift fork 4	P184B	Functional check	Shift fork position	1st cycle	Battery voltage Engine speed Time after engine start-up Requested shift fork	-	Type1
Shift fork 1/2	P1852	Functional check-opposite direction movement	Shift fork position	1st cycle	Battery voltage Engine speed Time after engine start-up Shift fork target direction	-	Type1
Shift fork 3/4	P1855	Functional check-opposite direction movement	Shift fork position	1st cycle	Battery voltage Engine speed Time after engine start-up Shift fork target direction	-	Type1
Input shaft 1 [odd] interlock	P1857	Functional check-interlock	Shift fork position	1st cycle	Battery voltage Engine speed Time after engine start-up	-	Type1
Input shaft 2 [even] interlock	P1858	Functional check-interlock	Shift fork position	1st cycle	Battery voltage Engine speed Time after engine start-up	-	Type1
Common high side 1	P1862	Rationality-over current	Voltage Current	1st cycle	Battery voltage Activation command of high side 1	-	Type1
	P1863	Circuit-open	Voltage	1st cycle	Battery voltage Activation command of high side 1	-	Type1
	P1864	Circuit-high	Voltage	1st cycle	Battery voltage Activation command of high side 1	-	Type1
	P186D	Rationality-low	Voltage	1st cycle	Battery voltage Activation command of high side 1	-	Type1

List of monitoring Items for T/M
<6AMT> for CY0, CX0, CZ0

Component	Fault code	Monitoring Strategy	Fault detection Criteria	MI activation criteria	Secondary Parameters	Precondition	Demo. test
Common high side 2	P1866	Rationality-over current	Voltage Current	1st cycle	Battery voltage Activation command of high side 2	-	Type1
	P1867	Circuit-open	Voltage	1st cycle	Battery voltage Activation command of high side 2	-	Type1
	P1868	Circuit-high	Voltage	1st cycle	Battery voltage Activation command of high side 2	-	Type1
	P186E	Rationality-low	Voltage	1st cycle	Battery voltage Activation command of high side 2	-	Type1
Common high side 3	P186A	Rationality-over current	Voltage Current	1st cycle	Battery voltage Activation command of high side 3	-	Type1
	P186B	Circuit-open	Voltage	1st cycle	Battery voltage Activation command of high side 3	-	Type1
	P186C	Circuit-high	Voltage	1st cycle	Battery voltage Activation command of high side 3	-	Type1
	P186F	Rationality-low	Voltage	1st cycle	Battery voltage Activation command of high side 3	-	Type1
Gear blocking	P1877	Functional check-2nd	Shift fork position	2nd cycle	Engine speed Time after engine start-up Target gear	One Type1 cycle	Type1
	P1878	Functional check-3rd	Shift fork position	2nd cycle	Engine speed Time after engine start-up Target gear	One Type1 cycle	Type1
	P1879	Functional check-4th	Shift fork position	2nd cycle	Engine speed Time after engine start-up Target gear	One Type1 cycle	Type1
	P187A	Functional check-5th	Shift fork position	2nd cycle	Engine speed Time after engine start-up Target gear	One Type1 cycle	Type1
	P187B	Functional check-6th	Shift fork position	2nd cycle	Engine speed Time after engine start-up Target gear	One Type1 cycle	Type1
Coding	P1676	Circuit continuity	Coding state	1st cycle	TCM start-up	-	Type1
Controller area network	U0001	Malfunction CAN line	CAN-H voltage CAN-L voltage	1st cycle	Battery voltage Time after engine start-up	-	Type1
	U0100	CAN communication status (ENG-ECU)	CAN signal from ENG-ECU	1st cycle	Battery voltage Time after engine start-up	-	Type1
	P1870	Signal failure-engine torque	CAN signal from ENG-ECU	2nd cycle	Battery voltage Time after engine start-up	One Type1 cycle	Type1
	P1871	Signal failure-accelerator pedal position	CAN signal from ENG-ECU	1st cycle	Battery voltage Time after engine start-up	-	Type1

List of monitoring Items for T/M

<4AT> for CY0, CX0

Component	Fault code	Monitoring Strategy	Fault detection Criteria	MI activation criteria	Secondary Parameters	Precondition	Demo. test
A/T Range Switch	P0705	Circuit continuity	T/M range switch input	2nd cycle	Engine speed Output shaft speed	One Type1 cycle	Type1
A/T Oil Temp Sensor	P0710	Circuit continuity	Fluid temperature	2nd cycle	Engine speed Input shaft speed Output shaft speed	One Type1 cycle	Type1
	P0712	Circuit continuity	Fluid temperature	1st cycle	Engine speed Input shaft speed	-	Type1
	P0713	Circuit continuity	Fluid temperature	1st cycle	Engine speed Output shaft speed	-	Type1
A/T Input Speed Sensor	P0715	Circuit continuity	Input shaft speed	1st cycle	T/M range switch Output shaft speed Engine speed	-	Type1
A/T Output Speed Sensor	P0720	Circuit continuity	Output shaft speed	1st cycle	T/M range switch Input shaft speed Engine speed	-	Type1
1st Gear Ratio	P0731	Rationality	Input shaft speed Output shaft speed	1st cycle	A/T Fluid temperature Engine speed Output shaft speed Input shaft speed T/M range switch Battery voltage	-	Type1
2nd Gear Ratio	P0732	Rationality	Input shaft speed Output shaft speed	1st cycle	A/T Fluid temperature Engine speed Output shaft speed Input shaft speed T/M range switch Battery voltage	-	Type1
3rd Gear Ratio	P0733	Rationality	Input shaft speed Output shaft speed	1st cycle	A/T Fluid temperature Engine speed Output shaft speed Input shaft speed T/M range switch Battery voltage	-	Type1
4th Gear Ratio	P0734	Rationality	Input shaft speed Output shaft speed	1st cycle	A/T Fluid temperature Engine speed Output shaft speed Input shaft speed T/M range switch Battery voltage	-	Type1

List of monitoring Items for T/M

<4AT> for CY0, CX0

Component	Fault code	Monitoring Strategy	Fault detection Criteria	MI activation criteria	Secondary Parameters	Precondition	Demo. test
Reverse Gear Ratio	P0736	Rationality	Input shaft speed Output shaft speed	1st cycle	A/T Fluid temperature Engine speed Output shaft speed Input shaft speed T/M range switch Battery voltage	-	Type1
Torque Converter Clutch	P0741	Rationality	Solenoid actual current	2nd cycle	Solenoid target current	One Type1 cycle	Type1
Torque Converter Clutch	P0742	Rationality (Stuck)	Output shaft speed Input shaft speed	2nd cycle	T/M range switch Accelerator position Output shaft speed	One Type1 cycle	Type1
Torque Converter Clutch Solenoid	P0740	Circuit continuity	Solenoid actual current	1st cycle	Solenoid target current Engine speed Battery voltage	-	Type1
	P0743	Circuit continuity	Solenoid actual current	1st cycle	Solenoid target current Engine speed Battery voltage	-	Type1
Shift Solenoid A	P0750	Circuit continuity	Solenoid actual current	1st cycle	Engine speed Battery voltage	-	Type1
	P0753	Circuit continuity	Solenoid actual current	1st cycle	Engine speed Battery voltage	-	Type1
Shift Solenoid B	P0755	Circuit continuity	Solenoid actual current	1st cycle	Engine speed Battery voltage	-	Type1
	P0758	Circuit continuity	Solenoid actual current	1st cycle	Engine speed Battery voltage	-	Type1
Shift Solenoid C	P0760	Circuit continuity	Solenoid actual current	1st cycle	Engine speed Battery voltage	-	Type1
	P0763	Circuit continuity	Solenoid actual current	1st cycle	Engine speed Battery voltage	-	Type1
Shift Solenoid D	P0765	Circuit continuity	Solenoid actual current	1st cycle	Engine speed Battery voltage	-	Type1
	P0768	Circuit continuity	Solenoid actual current	1st cycle	Engine speed Battery voltage	-	Type1
A/T Control Relay	P1751	Circuit Continuity	Relay actual current	1st cycle	Engine speed Battery voltage	-	Type1
Keep Alive Memory Backup Line	P1790	Circuit Continuity	Backup Line actual current	1st cycle	Battery voltage	-	Type1
Controller area network	U0001	Malfunction CAN line	CAN-H voltage CAN-L voltage	1st cycle	Battery voltage Time after engine start-up	-	Type1
	U0100	CAN communication status (ENG-ECU)	CAN signal from ENG-ECU	1st cycle	Battery voltage Time after engine start-up	-	Type1
	P0725	Engine speed information	CAN signal from ENG-ECU	1st cycle	Battery voltage Time after engine start-up	-	Type1
	P1901	CAN communication status (ENG-ECU)	CAN signal from ENG-ECU	1st cycle	Battery voltage Time after engine start-up	-	Type1
	P1706	accelerator pedal position	CAN signal from ENG-ECU	1st cycle	Battery voltage Time after engine start-up	-	Type1

List of additional monitoring items
(German VDA voluntary items for engine with VVT system)
Applicable only to the following models : Z30

Monitor Item	Fault Code	Monitoring Strategy	Failure Detection Criteria	Secondary Parameters	Precondi-tioning	Demonst-ration Test Mode	MI Activation Criteria (dc=driv. cyc.)	Note dc: according to 98/69/EC
Monitoring Concept	P1961	Plausibility Check TPS(MAIN)	| boost sensor value - backup boost sensor value after clip by TPS(MAIN) | > fixed Pressure(mmHg)	Engine speed, Accelerator position, Battery voltage	–	–	1 dc	MIL on(lighting)
	P1962	Plausibility Check TPS(SUB)	| boost sensor value - backup boost sensor value after clip by TPS(SUB) | > fixed Pressure(mmHg)	Engine speed, Accelerator position, Battery voltage	–	–		
	P1963	Plausibility check MAP	| backup boost sensor value for TPS(MAIN) - backup boost sensor value for TPS(SUB) | < fixed Pressure(mmHg) and | boost sensor value - backup boost sensor value after clip by TPS(MAIN) | > fixed Pressure(mmHg) and | boost sensor value - backup boost sensor value after clip by TPS(SUB) | > fixed Pressure(mmHg)	Engine speed, Accelerator position, Battery voltage	–	–	2 dc	
	P1964	AD converter	AD converter is failure. (AD value of TEST > fixed Voltage(always)) and (AD value of APS(SUB) > fixed Voltage)	Accelerator position	–	–	1 dc	
	P1965	Plausibility check APS	(APS(SUB) voltage x 2 - APS(MAIN) voltage) >= fixed Voltage and | △APS(SUB) voltage x2 / 25ms| < fixed Voltage	---	–	–		
	P1966	Plausibility check MAP	| backup boost sensor value for TPS(MAIN) - backup boost sensor value for TPS(SUB) | < fixed Pressure(mmHg) and | boost sensor value - backup boost sensor value after clip by TPS(MAIN) | > fixed Pressure(mmHg) and | boost sensor value - backup boost sensor value after clip by TPS(SUB) | > fixed Pressure(mmHg)	Engine speed, Accelerator position, Battery voltage	–	–		
	P1967	Plausibility check engine speed	|calculate value by level1 - calculate value by level2| >fixed Eng. speed	Engine speed	–	–		
	P1968	Plausibility check AMT	Demand torque of AMT is failure. (range,RAM complement,demand mode)	---	–	–	–	No MIL on (No lighting)
	P1969	Plausibility check ignition angle	Retard of ignition angle is failure. (RAM complement)	---				
	P1231	Plausibility check ESP	Demand torque of ESP is failure. (range,message check via CAN, demand mode)	CAN			1 dc	MIL on(lighting)
	P1970	Torque Monitoring	actual torque - permitted torque > fixed value	Engine speed, Accelerator position, Battery voltage				
Monitoring Concept	P1971	Fault reaction Monitoring	In Limp-home mode But engine speed > fixed value(high speed)	---	–	–	–	No MIL on (No lighting)
	P1972	Inquiry/Response error	Flow Check Error or Stimuli Data Error is detected.	---				
	P0606	ROM	ROM test for all area or cyclic ROM test is failure.	---				
	P1973	RAM test for all area	RAM test for all area is failure.	---				
	P1974	Cyclic RAM test (ENGINE)	Cyclic RAM test is failure.	---				
	P1975	Cyclic RAM test (GEAR)	Cyclic RAM test is failure.	---				
	P1976	Cyclic RAM test (Clutch)	Cyclic RAM test is failure.	---				
	P1232	Disabling path	Microcomputer, Monitoring Module can not disable to a throttle actuator.	---				
	P1977	Communication error	Communication error between Microcomputer and Monitoring Module.	---				

List of additional monitoring items

(German VDA voluntary items for engine with VVT system)

Applicable only to the models : CW0, CY0

Monitor Item	Fault Code	Monitoring Strategy	Failure Detection Criteria	Secondary Parameters	Pre-conditio-ning	Demon-stration Test Mode	MI Activation Criteria (dc=driv. cyc.)	Note dc: according to 98/69/EC
Monitoring Concept	P1233 P0121	Plausibility Check TPS(MAIN)	| Ec value - backup Ec value after clip by TPS(MAIN) | > fixed Ec(%)	Engine speed, Accelerator position, Battery voltage	–	–	1 dc	MIL on(lighting)
	P1234 P0221	Plausibility Check TPS(SUB)	| Ec value - backup Ec value after clip by TPS(SUB) | > fixed Ec(%)	Engine speed, Accelerator position, Battery voltage	–	–		
	P1235 P0068	Plausibility check MAP	| Ec value for TPS(MAIN) - backup Ec value for TPS(SUB) | < fixed Ec(%) and | Ec value - backup Ec value after clip by TPS(MAIN) | > fixed Ec(%) and | Ec value - backup Ec value after clip by TPS(SUB) | > fixed Ec(%)	Engine speed, Accelerator position, Battery voltage	–	–	1 dc	
	P1236 P060B	AD converter	AD converter is failure. (AD value of TEST > fixed Voltage(always)) and (AD value of APS(SUB) > fixed Voltage)	Accelerator position	–	–	1 dc	
	P1237 P060D	Plausibility check APS	(APS(SUB) voltage x 2 - APS(MAIN) voltage) >= fixed Voltage and | Δ APS(SUB) voltage x2 / 25ms| < fixed Voltage	---	–	–		
	P1238	Plausibility check MAP	| backup Ecr value for TPS(MAIN) - backup Ec value for TPS(SUB) | < fixed Ec(%) and | Ec value - backup Ec value after clip by TPS(MAIN) | > fixed Ec(%) and | Ec value - backup Ec value after clip by TPS(SUB) | > fixed Ec(%)	Engine speed, Accelerator position, Battery voltage	–	–		
	P1239 P061C	Plausibility check engine speed	|calculate value by level1 - calculate value by level2| >fixed Eng. speed	Engine speed	–	–		
	P1247	Plausibility check TRNS	Demand torque of TRNS is failure. (range, RAM complement, demand mode)	---	–	–	–	No MIL on (No lighting)
	P1240	Plausibility check ignition angle	Retard of ignition angle is failure. (RAM complement)	---				
	P1231	Plausibility check ESP	Demand torque of ESP is failure. (range, message check via CAN, demand mode)	CAN				
	P1241 P061A	Torque Monitoring	actual torque - permitted torque > fixed value	Engine speed, Accelerator position, Battery voltage			1 dc	MIL on(lighting)
Monitoring Concept	P1242	Fault reaction Monitoring	In Limp-home mode But engine speed > fixed value(high speed)	---	–	–	–	No MIL on (No lighting)
	P1243	Inquiry/Response error	Flow Check Error or Stimuli Data Error is detected.	---				
	P0606	ROM	ROM test for all area or cyclic ROM test is failure.	---				
	P1244	RAM test for all area	RAM test for all area is failure.	---				
	P1245	Cyclic RAM test (ENGINE)	Cyclic RAM test is failure.	---				
	P1248	Plausibility chwck 4WD	Demand torque of 4WD is failure. (range,message check via CAN,demand mode)	CAN				
	P1232	Disabling path	Microcomputer, Monitoring Module can not disable to a throttle actuator.	---				

SERVICE $06 DATA

OBDMID	S/MDTID	Item	Scale
01	81	A/F Sensor / Oxygen Sensor Monitor Bank1-Sensor1 Rich/Lean Switching frequency	1count/bit
02	08	Oxygen Sensor Monitor Bank1-Sensor2 Maximum Sensor Voltage for Test Cycle	0.122mV/bit
	82	Oxygen Sensor Monitor Bank1-Sensor2 Output Voltage change	0.122mV/bit
21	83	Catalyst Monitor Bank1 Frequency ratio between Front- and Rear-Oxygen Sensors	0.0039/bit
A2	0B	Mis-Fire Cylinder1 Data EWMA Misfire Counts For Last 10 Driving Cycles	1count/bit
	0C	Mis-Fire Cylinder1 Data Misfire Counts For Last/Current Driving Cycle	1count/bit
A3	0B	Mis-Fire Cylinder2 Data EWMA Misfire Counts For Last 10 Driving Cycles	1count/bit
	0C	Mis-Fire Cylinder2 Data Misfire Counts For Last/Current Driving Cycle	1count/bit
A4	0B	Mis-Fire Cylinder3 Data EWMA Misfire Counts For Last 10 Driving Cycles	1count/bit
	0C	Mis-Fire Cylinder3 Data Misfire Counts For Last/Current Driving Cycle	1count/bit
A5	0B	Mis-Fire Cylinder4 Data EWMA Misfire Counts For Last 10 Driving Cycles	1count/bit
	0C	Mis-Fire Cylinder4 Data Misfire Counts For Last/Current Driving Cycle	1count/bit