GROUP 1

BRAKING EQUIPMENT

CONTENTS

1.1. MECHANICAL CONDITION AND OPERATION 1-2

1.1.1. Service brake pedal/hand lever pivot 1-2

1.1.2. Pedal/hand lever condition and travel of the brake operating device 1-2

1.1.3. Vacuum pump or compressor and reservoirs 1-2

1.1.4. Low pressure warning gauge or indicator 1-2

1.1.6. Parking brake activator, lever control, parking brake ratchet, electronic parking brake 1-2

1.1.8. Couplings for trailer brakes (electrical & pneumatic) 1-5

1.1.9. Energy storage reservoir pressure tank 1-6

1.1.11. Rigid brake pipes 1-6

1.1.12. Flexible brake hoses 1-6

1.1.13. Brake linings and pads 1-6

1.1.14. Brake drums, brake discs 1-7

1.1.15. Brake cables, rods, levers, linkages 1-8

1.1.16. Brake actuators (including spring brakes or hydraulic cylinders) 1-8

1.1.17. Load sensing valve 1-9

1.1.18. Slack adjusters and indicators 1-9

1.1.19. Endurance braking system (where fitted or required) 1-9

1.1.20. Automatic operation of trailer brakes 1-9

1.1.22. Test connections (where fitted or required) 1-9

1.1.23. Overrun brake 1-9

1.2 SERVICE BRAKING PERFORMANCE AND EFFICIENCY 1-9

1.2.1. Performance 1-9

1.2.2. Efficiency 1-9

1.3. SECONDARY (EMERGENCY) BRAKING PERFORMANCE AND EFFICIENCY (IF MET BY SEPARATE SYSTEM) 1-10

1.3.1. Performance 1-10

1.3.2. Efficiency 1-10

1.4. PARKING BRAKING PERFORMANCE AND EFFICIENCY 1-10

1.4.1. Performance 1-10

1.4.2. Efficiency 1-10

1.5. ENDURANCE BRAKING SYSTEM PERFORMANCE 1-10

1.6. ANTI-LOCK BRAKING SYSTEM (ABS) 1-11

1.7 ELECTRONIC BRAKE SYSTEM (EBS) 1-11

1.8 BRAKE FLUID 1-11

1.1. Mechanical condition and operation

1.1.1. Service brake pedal/hand lever pivot

M6101010100016

"Not Applicable"

1.1.2. Pedal/hand lever condition and travel of the brake operating device

M6101010200013

"Not Applicable"

1.1.3. Vacuum pump or compressor and reservoirs

M6101010300010

"Not Applicable"

1.1.4. Low pressure warning gauge or indicator

M6101010400017

"Not Applicable"

1.1.6. Parking brake activator, lever control, parking brake ratchet, electronic parking brake

M6101000100015

For the parking brake, the lever type parking brake or the electric parking brake is adopted.

LEVER TYPE PARKING BRAKE

CONSTRUCTION DIAGRAM

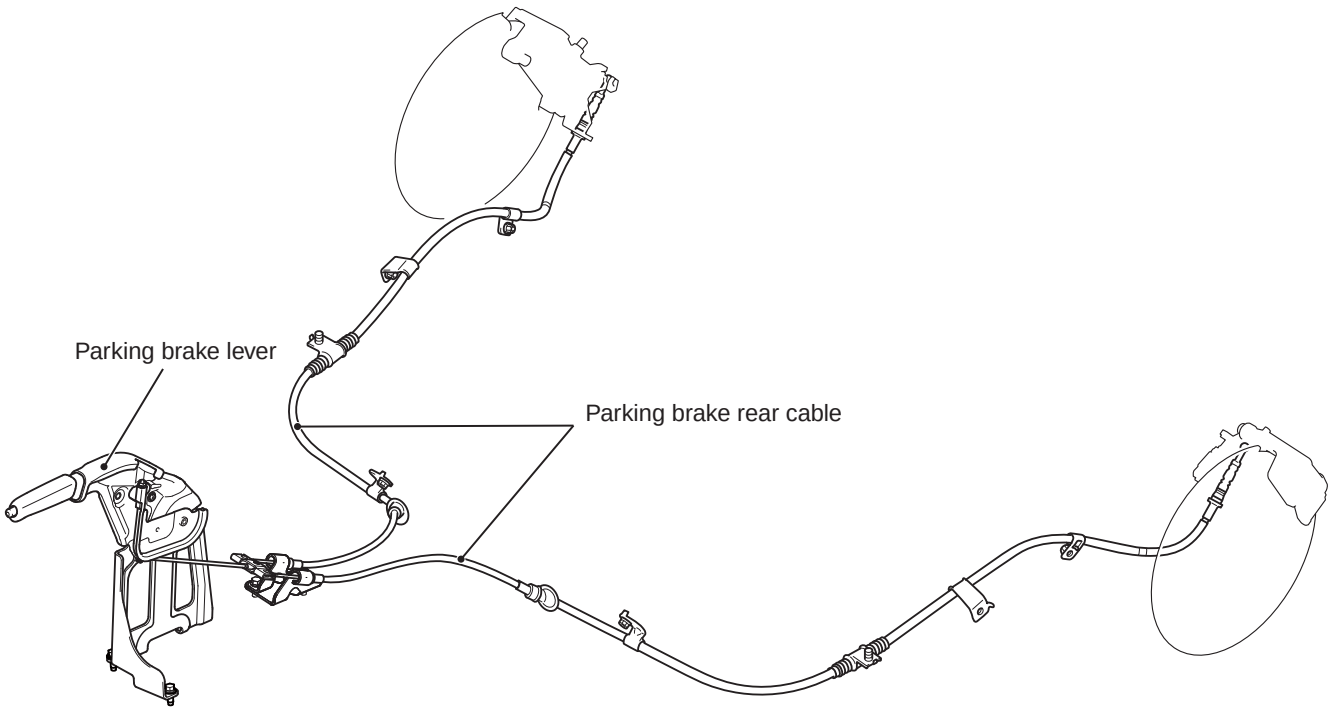

ACH04271AB

ELECTRIC PARKING BRAKE

CONSTRUCTION DIAGRAM

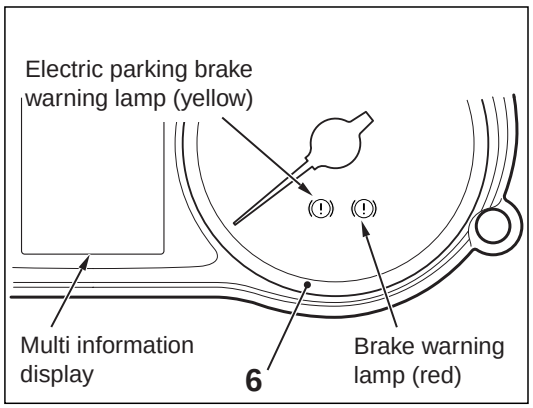

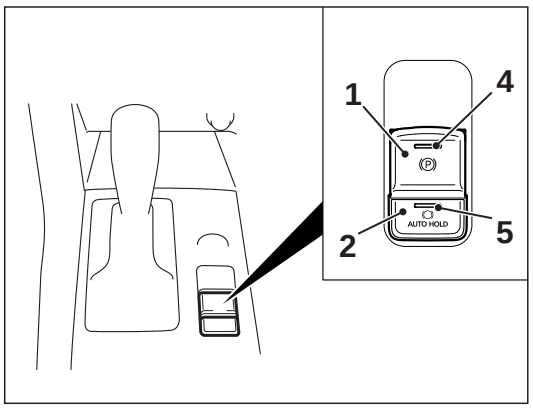

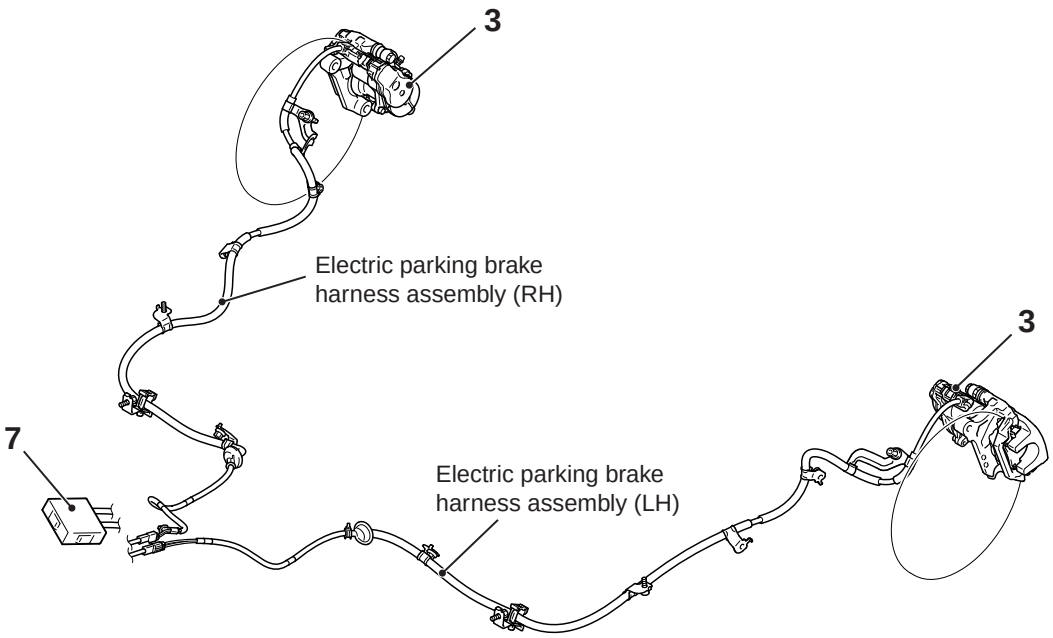

ACH03635 AB

Item		Number	Outline of function
Sensor	Electric parking brake switch	1	Sends a signal to the electric parking brake ECU to apply and release the electric parking brake.
	Brake auto hold switch	2	The electric parking brake ECU provides the ASC-ECU with the brake auto hold switch ON/OFF information.

Item		Number	Outline of function
CAN bus signal	Shift information	–	Detects which range the selector lever is in, and sends a signal to the electric parking brake ECU via CAN bus lines.
	Accelerator pedal position sensor	–	Detects how deeply the accelerator pedal is depressed, and sends a signal to the electric parking brake ECU via CAN bus lines.
	Engine torque	–	Is provided to the electric parking brake ECU via the CAN bus lines.
	Engine speed	–	Is provided to the electric parking brake ECU via the CAN bus lines.
	AS&G system operation state	–	Is provided to the electric parking brake ECU via the CAN bus lines.
	Wheel speed sensor	–	Detects the speed of road wheels, and sends a signal to the electric parking brake ECU via CAN bus lines.
	G sensor	–	Is incorporated in the ASC-ECU, detects longitudinal acceleration, and sends a signal to the electric parking brake ECU via CAN bus lines.
	Master cylinder fluid pressure sensor	–	Sends a signal to the electric parking brake ECU via the CAN bus lines. The system determines whether the brake pedal is depressed or not by using the signal.
	Brake auto hold switch indicator illumination request signal	–	Is provided to the electric parking brake ECU via the CAN bus lines.
	Coding information	–	Is sent to the electric parking brake ECU via the CAN bus lines.
	Ignition switch status	–	Is provided to the electric parking brake ECU via the CAN bus lines.
	Odometer reading	–	Is sent to the electric parking brake ECU via the CAN bus lines.
	Driver's seat belt fastened or unfastened	–	Is sent to the electric parking brake ECU via the CAN bus lines.
Actuator	Electric parking brake actuator	3	Activates the electric motor in accordance with the command from the electric parking brake ECU to regulate the parking brake.
	Electric parking brake switch indicator lamp	4	Informs the driver of the system status by flash, illuminating or turning off the indicator lamp according to the signal from electric parking brake ECU.
	Brake auto hold switch indicator lamp	5	The electric parking brake ECU activates or deactivates the brake auto hold switch indicator lamp according to the request sent by the ASC-ECU.
	Combination meter	6	Receives a signal from the electric parking brake ECU, and triggers the warning lamp, the multi-information display or the buzzer to alert the driver of the system status.
Diagnosis connector		–	Outputs the diagnosis codes and allows communication with the M.U.T.-IIISE.

Item	Number	Outline of function
Electric parking brake ECU	7	Controls actuators (described above) based on the signals coming from each sensor.
		Controls the self-diagnostics and fail-safe functions.
		Controls the diagnostic function (M.U.T.-IIISE compatible).

SYSTEM CONFIGURATION DIAGRAM

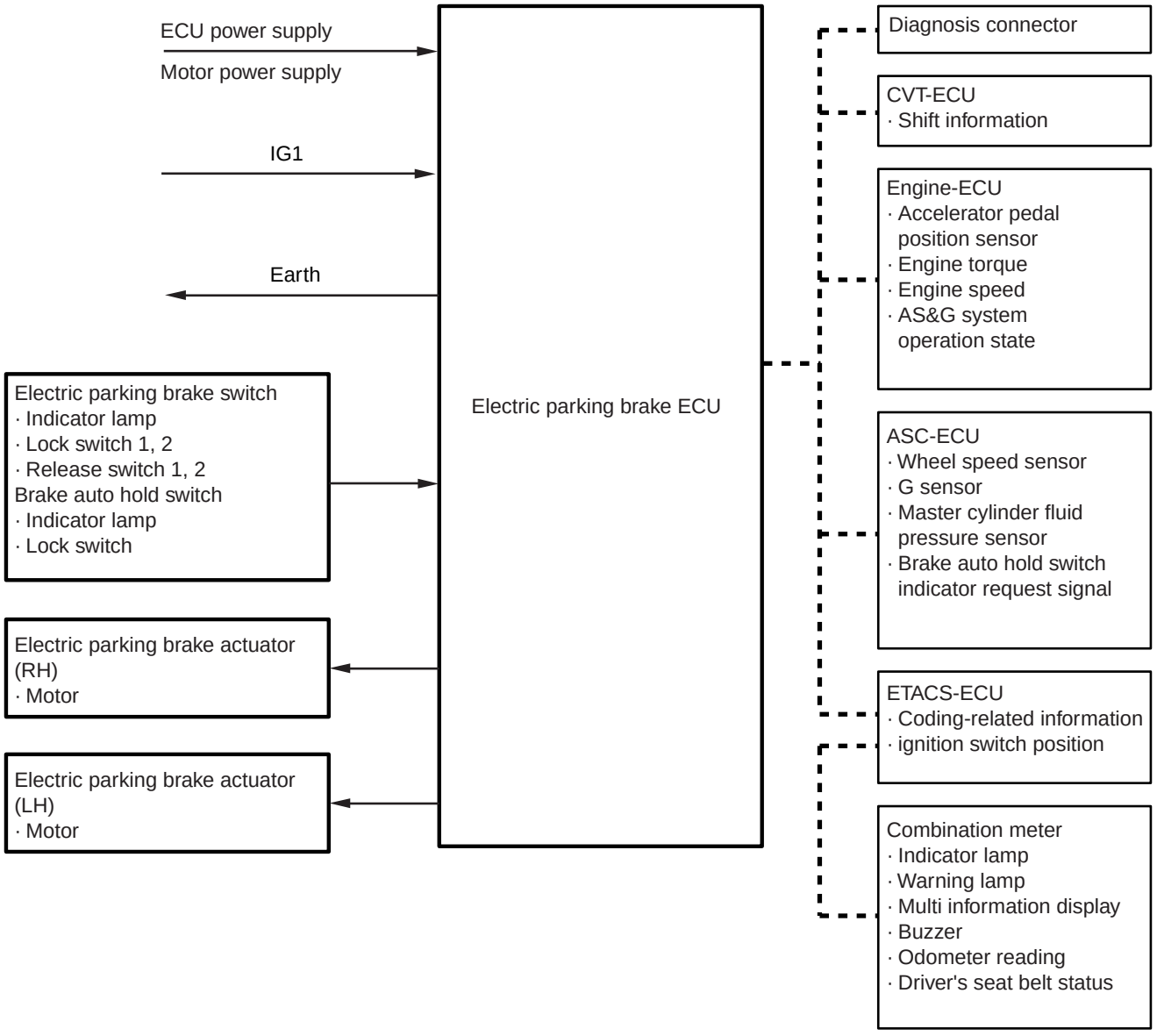

ACH03479AB

NOTE: Dashed lines indicate the CAN bus communication lines.

1.1.8. Couplings for trailer brakes (electrical & pneumatic)

M6101010800015

"Not Applicable"

1.1.9. Energy storage reservoir pressure tank

M6101010900012

"Not Applicable"

1.1.11. Rigid brake pipes

M6101011100019

"Not Applicable"

1.1.12. Flexible brake hoses

M6101011200016

"Not Applicable"

1.1.13. Brake linings and pads

M6101000200012

<FRONT>

⚠ CAUTION

If there is a significant difference in thickness between the brake pads at right and left, check the sliding area and the run-out of the brake disc.

<Vehicles with 1-piston ventilate front disc brake>

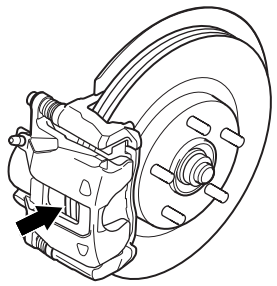

ACH03793AB

<Vehicles with 2-piston ventilate front disc brake>

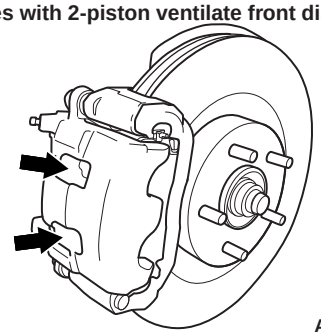

ACH03794AB

1. Visually check the thickness of brake pad from the inspection hole of the caliper body.

   Standard value: 10.0 mm
   Limit: 2.0 mm

2. If the brake pad thickness is less than the limit value, replace the brake pad.

<REAR>

⚠ CAUTION

If there is a significant difference in thickness between the brake pads at right and left, check the sliding area and the run-out of the brake disc.

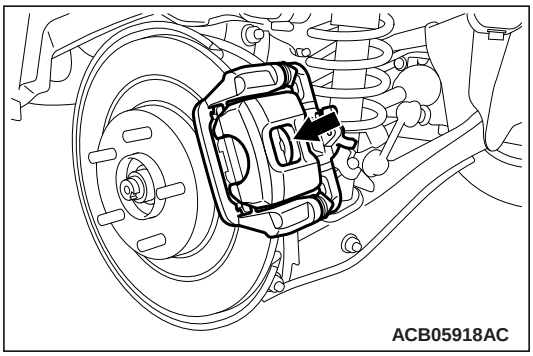

ACB05918AC

1. Visually check the thickness of brake pad from the inspection hole of the caliper body.

   Standard value: 9.0 mm
   Limit: 2.0 mm

2. If the brake pad thickness is less than the limit value, replace the brake pad.

1.1.14. Brake drums, brake discs

M6101000300019

BRAKE DISC THICKNESS CHECK

1. Remove contaminants or corrosion from the brake disc surface.

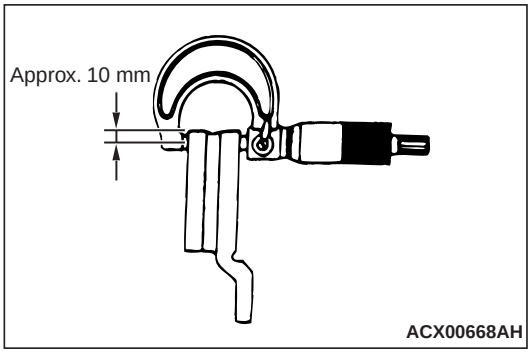

2. Use a micrometer to measure the brake disc thickness at minimum eight points which are 10 mm inward from its circumference.

   <Front (Vehicles with 1-piston ventilate front disc brake)>
   Standard value: 26.0 mm
   Limit: 24.4 mm
   <Front (Vehicles with 2-piston ventilate front disc brake)>
   Standard value: 28.0 mm
   Limit: 26.4 mm
   <Rear>
   Standard value: 10.0 mm
   Limit: 8.4 mm

3. If the brake disc thickness is worn beyond the limit value at more than one point, replace the brake disc and check its run-out.

BRAKE DISC THICKNESS UNEVENNESS CHECK AND CORRECTION

1. Remove contaminants or corrosion from the brake disc surface.

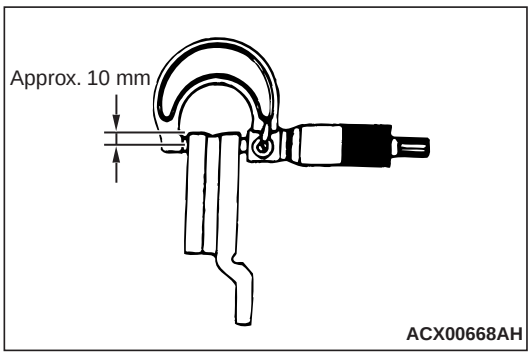

2. Use a micrometer to measure the brake disc thickness at minimum eight points which are 10 mm inward from its circumference. Then record the measurements.
3. If the brake disc thickness unevenness (the difference between the maximum and minimum values measured above) is 0.015 mm or less, it is within the standard value.
4. If the brake disc thickness unevenness exceeds the standard value, grind it according to the procedure below while it is mounted on the vehicle.

   NOTE: If it is suspected that the brake disc thickness will become less than the limit value after the grinding, replace the brake disc and check its run-out.

   (1) Check for wheel bearing looseness in the axial direction.

⚠ CAUTION

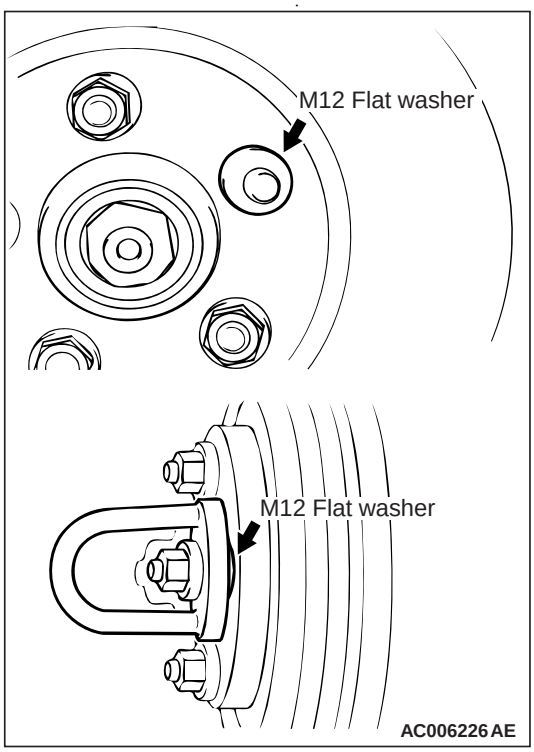

Insert M12 plain washer and then install the adapter as shown before grinding. Failure to use the M12 plain washer will cause the brake disc to be deformed and earth incorrectly.

- **To grind the brake disc, ensure that all the nuts (M12 X 1.5) are tightened evenly and in a diagonal sequence to the specified torque (100 N·m). Failure to use all the nuts (M12×1.5), excessive or uneven tightening torque will cause the brake disc to deform or judder.**

   (2) Correct the brake disc uneven thickness by grinding it while in place on the vehicle.

BRAKE DISC RUN-OUT CHECK AND CORRECTION

1. Check for wheel bearing looseness in the axial direction.
2. If the axial play is within the limit value, secure the brake disc by tightening the nut (M12×1.5) evenly to the specified torque (100 N·m).If the axial play still exceeds the limit value, replace the wheel bearing. Then secure the brake disc by tightening the nut (M12×1.5) evenly to the specified torque (100 N·m).

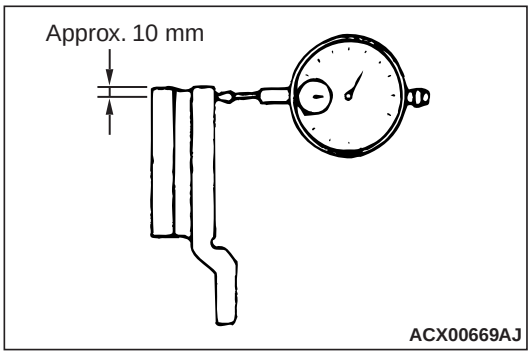

3. Place a dial gauge ca. 10 mm inward from the circumference of the brake disc to measure its run-out.

   Limit:
   0.06 mm <Front>
   0.08 mm <Rear>

4. If the brake disc run-out exceeds the limit value, rephase the brake disc to the hub so that the minimum brake disc run-out is obtained.

⚠ CAUTION

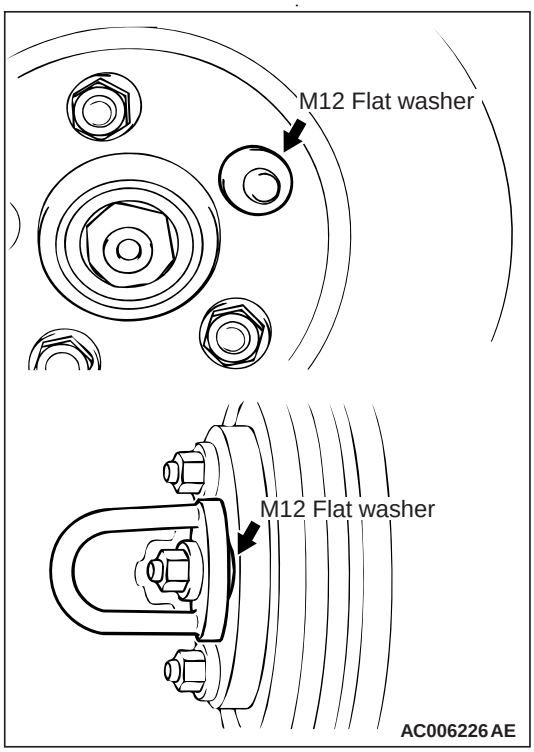

Insert M12 plain washer and then install the adapter as shown before grinding. Failure to use the M12 plain washer will cause the brake disc to be deformed and earth incorrectly.

- **To grind the brake disc, ensure that all the nuts (M12 X 1.5) are tightened evenly and in a diagonal sequence to the specified torque (100 N·m). Failure to use all the nuts (M12×1.5), excessive or uneven tightening torque will cause the brake disc to deform or judder.**

5. If the brake disc run-out exceeds the limit value after rephasing, grind the disc while in place on the vehicle so that the brake disc run-out is within the limit value.

   NOTE: If it is suspected that the brake disc thickness will be below the limit value, replace the brake disc. Then rephase the brake disc so that the minimum brake disc run-out is obtained, or grind the disc while in place on the vehicle so that its run-out is below the limit value.

1.1.15. Brake cables, rods, levers, linkages

M6101011500017

"Not Applicable"

1.1.16. Brake actuators (including spring brakes or hydraulic cylinders)

M6101011600014

"Not Applicable"

1.1.17. Load sensing valve

M6101011700011

"Not Applicable"

1.1.18. Slack adjusters and indicators

M6101011800018

"Not Applicable"

1.1.19. Endurance braking system (where fitted or required)

M6101011900015

"Not Applicable"

1.1.20. Automatic operation of trailer brakes

M6101012000015

"Not Applicable"

1.1.22. Test connections (where fitted or required)

M6101012200019

"Not Applicable"

1.1.23. Overrun brake

M6101012300016

"Not Applicable"

1.2 Service braking performance and efficiency

1.2.1. Performance

M6102000100018

BRAKE DRAG FORCE CHECK

1. Remove the brake pad, shim and clip.

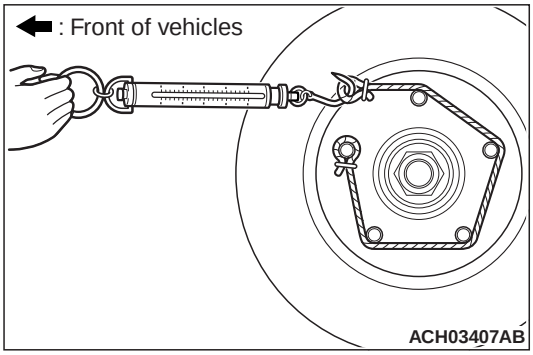

2. Using a spring scale, measure the hub sliding torque in the forward direction with the brake pad, shim and clip removed.
3. Install the brake pad, shim and clip.
4. Start the engine, and depress the brake pedal lightly two or three times. Then stop the engine. (Depressing force: approximately 50 – 100 N)
5. Turn the brake disc 10 times in the forward direction.
6. Using a spring scale, measure the hub sliding torque in the forward direction with the brake pad, shim and clip installed.
7. Obtain the disc brake drag force (difference between measured values of item 2 and item 6).

   Standard value: 68 N or less
8. If the brake drag force exceeds the standard value, disassemble the brake caliper assembly to check for fouling/rust on the piston sliding section and piston seal deterioration, and confirm whether the guide pin and lock pin slide properly.

1.2.2. Efficiency

M6102010200016

"Not Applicable"

1.3. Secondary (emergency) braking performance and efficiency (if met by separate system)

1.3.1. Performance

M6103000100011

The FCM has the same system as the basic brake.
(Refer to 1.2.1. Performance P.1-9)

1.3.2. Efficiency

M6103010100012

"Not Applicable"

1.4. Parking braking performance and efficiency

1.4.1. Performance

M6104000100025

BRAKE DRAG FORCE CHECK

1. Remove the brake pad, shim and clip.

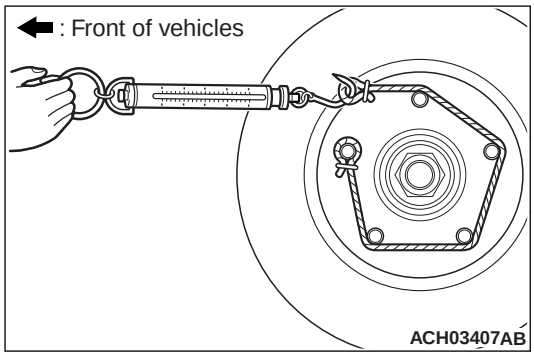

2. Using a spring scale, measure the hub sliding torque in the forward direction with the brake pad, shim and clip removed.
3. Install the brake pad, shim and clip.
4. Start the engine, and depress the brake pedal lightly two or three times. Then stop the engine. (Depressing force: approximately 50 – 100 N)
5. Turn the brake disc 10 times in the forward direction.
6. Using a spring scale, measure the hub sliding torque in the forward direction with the brake pad, shim and clip installed.
7. Obtain the disc brake drag force (difference between measured values of item 2 and item 6).

   Standard value: 68 N or less
8. If the brake drag force exceeds the standard value, disassemble the brake caliper assembly to check for fouling/rust on the piston sliding section and piston seal deterioration, and confirm whether the guide pin and lock pin slide properly.

1.4.2. Efficiency

M6104010200012

"Not Applicable"

1.5. Endurance braking system performance

M6104500000012

"Not Applicable"

1.6. Anti-lock braking system (ABS)

M6105000000010

Check that ABS and brake warning lamps, ASC warning/operation lamp, brake auto hold indicator illuminate as follows.

NOTE: The brake warning lamp is used as a warning lamp for parking brake, brake fluid level, and EBD control.

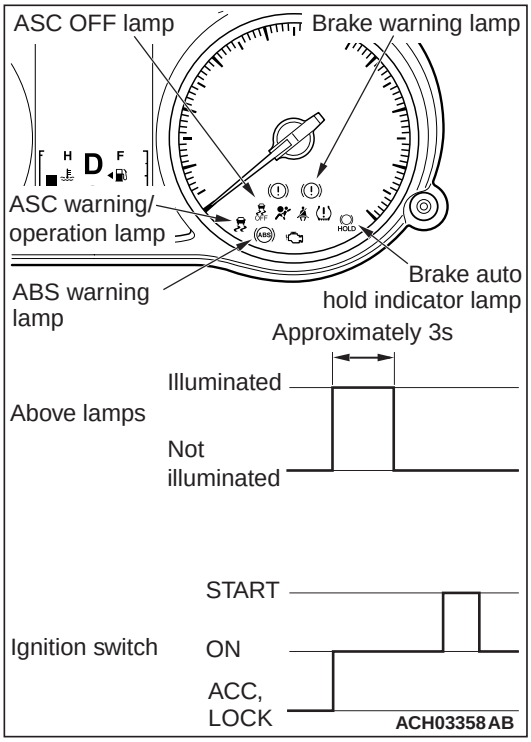

1. When the ignition switch is turned to the ON position, ABS and brake warning lamps, ASC warning/operation lamp, ASC OFF lamp or brake auto hold indicator lamp illuminate.
2. The ABS and brake warning lamps, ASC warning/operation lamp, ASC OFF lamp or brake auto hold indicator lamp illuminate for three seconds[*1] and then turn OFF[*2].
3. Otherwise, check the diagnosis code.

NOTE:

- *[*1]: The ABS warning lamp, ASC warning/operation lamp, ASC OFF lamp or brake auto hold indicator lamp may stay ON until the vehicle speed reaches 10 km/h. As far as ASC-ECU sets any diagnosis code related to the wheel speed sensor malfunction or the motor malfunction as past trouble, ASC-ECU continues illuminating the ABS warning lamp until it verifies that the malfunction for that code is resolved (startup check).*

If the steering wheel sensor or the G and yaw rate sensor system was detected to be defective during ignition switch being ON at the last time, the ASC warning/operation lamp and the ASC OFF lamp will illuminate until the vehicle speed reaches approx. 10 km/h, then the steering wheel is turned to either right or left and then the ECU determines that the system is normal.

- *[*2]: The brake warning lamp does not turn OFF when the parking brake is applied or the brake fluid level is lowered.*

1.7 Electronic brake system (EBS)

M6106000000013

"Query raised for this content"

1.8 Brake fluid

M6107000000016

"Not Applicable"

GROUP 2

STEERING

CONTENTS

2.1. MECHANICAL CONDITION 2-2
2.1.1. Steering gear condition 2-2
2.1.2. Steering gear casing attachment . . . 2-2
2.1.3. Steering linkage condition 2-2
2.1.4. Steering linkage operation 2-2
2.1.5. Power steering 2-2

2.2. STEERING WHEEL, COLUMN AND HANDLE BAR 2-2
2.2.1. Steering wheel/handle bar condition . 2-2
2.2.2. Steering column/yokes and forks and steering dampers 2-2

2.3. STEERING PLAY 2-2

2.4. WHEEL ALIGNMENT (X)2 2-2

2.5. TRAILER STEERED AXLE TURNTABLE 2-2

2.6. ELECTRONIC POWER STEERING (EPS) 2-3

2.1. Mechanical condition

2.1.1. Steering gear condition

M6111000100016

"Not Applicable"

2.1.2. Steering gear casing attachment

M6111010200014

"Not Applicable"

2.1.3. Steering linkage condition

M6111010300011

"Not Applicable"

2.1.4. Steering linkage operation

M6111010400018

"Not Applicable"

2.1.5. Power steering

M6111010500015

"Not Applicable"

2.2. Steering wheel, column and handle bar

2.2.1. Steering wheel/handle bar condition

M6110110100011

"Not Applicable"

2.2.2. Steering column/yokes and forks and steering dampers

M6110110200018

"Not Applicable"

2.3. Steering play

M6110300000017

"Not Applicable"

2.4. Wheel alignment (X)2

M6110400000014

"Not Applicable"

2.5. Trailer steered axle turntable

M6110500000011

"Not Applicable"

2.6. Electronic Power Steering (EPS)

M6110600000018

An electrical power steering system has been adopted.

FEATURES

- Improved fuel consumption by reduction of engine load, and weight saving by decrease of the number of parts have been achieved with the introduction of the electric power steering system.
- 3-spoke type steering wheel integrated with an SRS air bag has been adopted.
- Shock absorbing mechanism has been adopted with the steering column shaft assembly.
- The telescopic mechanism as well as the tilt mechanism has been adopted so that more customers can drive with the optimal posture.
- The brushless motor is adopted, which has a dual system inside, to offer better feeling with less uneven torque. The torque sensor zero point correction is adopted to improve steerage.
- The fail-safe function is adopted, which can continue to assist as much as possible, to improve safety at the time of the trouble.

SPECIFICATIONS

Item		**Specification**
Steering wheel	Type	3-spoke type
	Outside diameter mm	370
	Maximum number of turns	2.9
Power steering type		Electrical powered type
Steering gear	Type	Rack and pinion type
	Stroke ratio (Rack stroke/Steering wheel maximum number of turns) mm/rev	49.93
	Rack stroke mm	144
Steering angle	Inner wheel	38° 40'
	Outer wheel (reference value)	32° 10'

CONSTRUCTION DIAGRAM

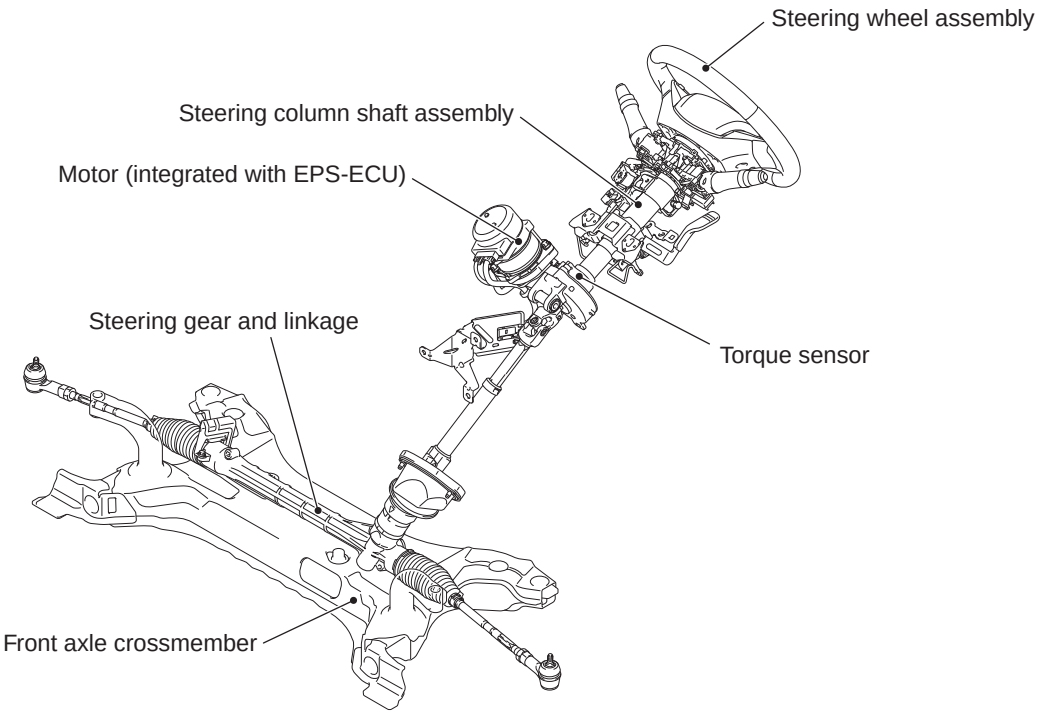

ACH03751AB

CHECK OF ELECTRIC POWER STEERING WARNING LAMP

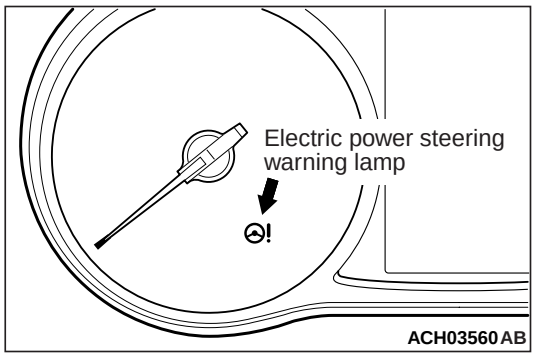

ACH03560AB

If the electric power steering warning lamp does not operate, the electric power steering system or the combination meter may be defective. Check for diagnosis code, and carry out diagnosis. If no diagnosis codes are set, carry out diagnosis by referring to the electric power steering warning lamp-related inspection items on the trouble symptom chart.

CHECK STEERING LINKAGE FOR DAMAGE AND LOOSE CONNECTIONS (INCLUDING SEALS AND BOOTS)

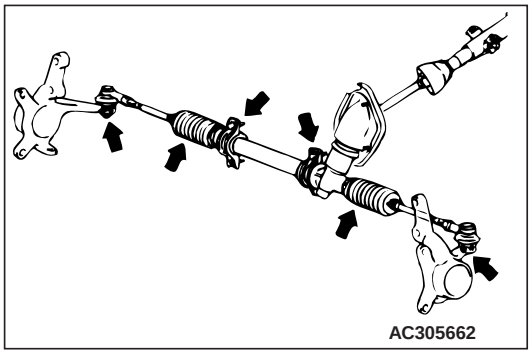

AC305662

1. Move the steering wheel bit by bit to the left or right, and check to be sure that there is no play or looseness in the linkage coupling, that the installation is not loose, and that the rod or arm is not bent or damaged.

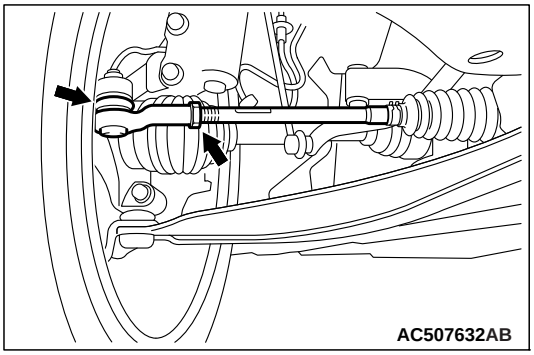

2. Check to be sure that the seal and boot of the ball joint are correctly installed (in the correct position), and that they are not damaged.

3. Check tie-rod end lock nut for looseness. If lock nut is loose, adjust toe-in and then tighten lock nut to the specified torque.

   Tightening torque: 52 ± 2 N·m

GROUP 3

VISIBILITY

CONTENTS

3.1. FIELD OF VISION 3-2
3.2. CONDITION OF GLASS 3-2
3.3. REAR-VIEW MIRRORS OR DEVICES 3-2
3.4. WINDSCREEN WIPERS 3-2
3.5. WINDSCREEN WASHERS 3-2
3.6. DEMISTING SYSTEM (X)2 3-2

3.1. Field of vision

M6121100000017

"Not Applicable"

3.2. Condition of glass

M6121200000014

"Not Applicable"

3.3. Rear-view mirrors or devices

M6121300000011

"Not Applicable"

3.4. Windscreen wipers

M6121400000018

"Not Applicable"

3.5. Windscreen washers

M6121500000015

"Not Applicable"

3.6. Demisting system (X)2

M6121600000012

"Not Applicable"

GROUP 4

LAMPS, REFLECTORS AND ELECTRICAL EQUIPMENT

CONTENTS

4.1. HEADLAMPS 4-3
- 4.1.1. Condition and operation 4-3
- 4.1.2. Alignment 4-14
- 4.1.3. Switching 4-16
- 4.1.4. Compliance with requirements1 4-16
- 4.1.5. Levelling devices (where mandatory) 4-17
- 4.1.6. Headlamp cleaning device (where mandatory) 4-28

4.2. FRONT AND REAR POSITION LAMPS, SIDE MARKER LAMPS, END OUTLINE MARKER LAMPS AND DAYTIME RUNNING LAMPS 4-29
- 4.2.1. Condition and operation 4-29
- 4.2.2. Switching 4-39
- 4.2.3. Compliance with requirements1 4-39

4.3. STOP LAMPS 4-40
- 4.3.1. Condition and operation 4-40
- 4.3.2. Switching 4-40
- 4.3.3. Compliance with requirements1 4-47

4.4. DIRECTION INDICATOR AND HAZARD WARNING LAMPS 4-48
- 4.4.1. Condition and operation 4-48
- 4.4.2. Switching 4-48
- 4.4.3. Compliance with requirements1 4-48
- 4.4.4. Flashing frequency 4-48

4.5. FRONT AND REAR FOG LAMPS 4-48
- 4.5.1. Condition and operation 4-48
- 4.5.2. Alignment (X)2 4-48
- 4.5.3. Switching 4-48
- 4.5.4. Compliance with requirements1 4-48

4.6. REVERSING LAMPS 4-48
- 4.6.1. Condition and operation 4-48
- 4.6.2. Compliance with requirements1 4-48
- 4.6.3. Switching 4-48

4.7. REAR REGISTRATION PLATE LAMP 4-49
- 4.7.1. Condition and operation 4-49
- 4.7.2. Compliance with requirements1 4-49

4.8. RETRO-REFLECTORS, CONSPICUITY (RETRO REFLECTING) MARKINGS AND REAR MARKING PLATES 4-49
- 4.8.1. Condition 4-49
- 4.8.2. Compliance with requirements1 4-49

4.9. TELL-TALES MANDATORY FOR LIGHTING EQUIPMENT 4-49
- 4.9.1. Condition and operation 4-49
- 4.9.2. Compliance with requirements1 4-49

4.10. ELECTRICAL CONNECTIONS

BETWEEN TOWING VEHICLE AND TRAILER OR SEMI-TRAILER 4-49

4.11.ELECTRICAL WIRING. 4-49

4.12. NON OBLIGATORY LAMPS AND RETRO-REFLECTORS (X)2. 4-50

4.13. BATTERY(IES) 4-61

4.1. Headlamps

4.1.1. Condition and operation

M6131000100018

Construction diagram

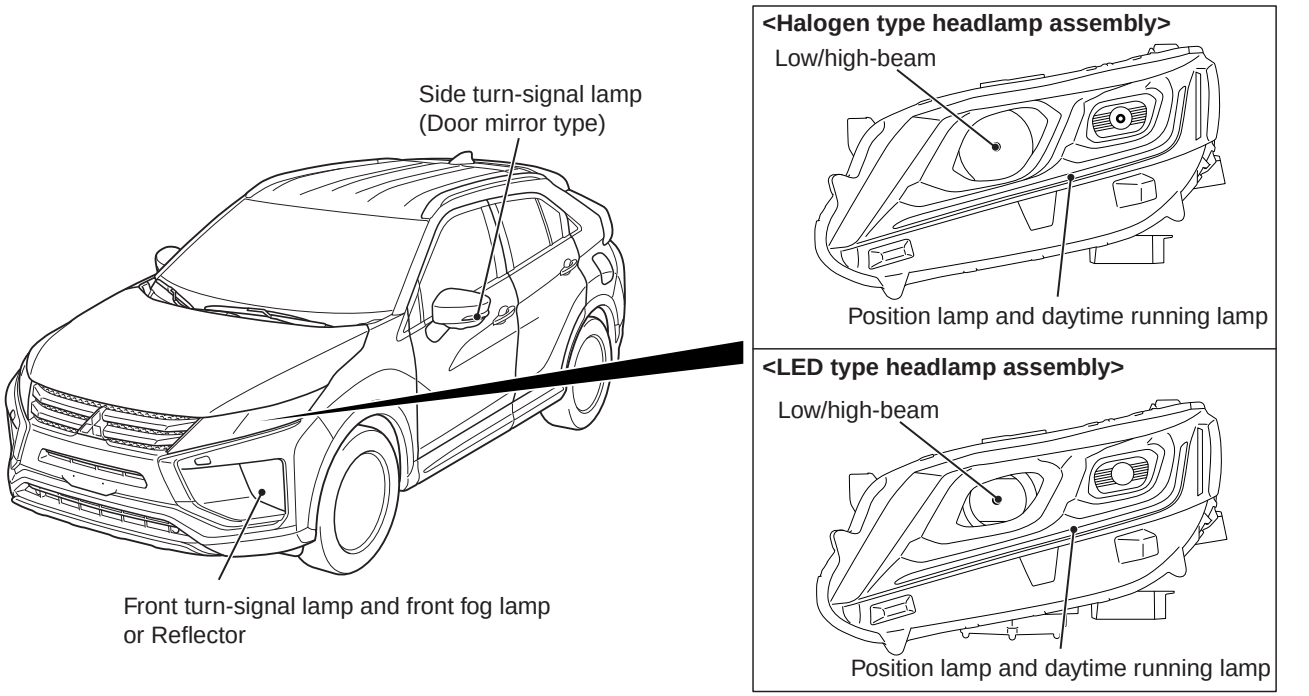

ACH03701AB

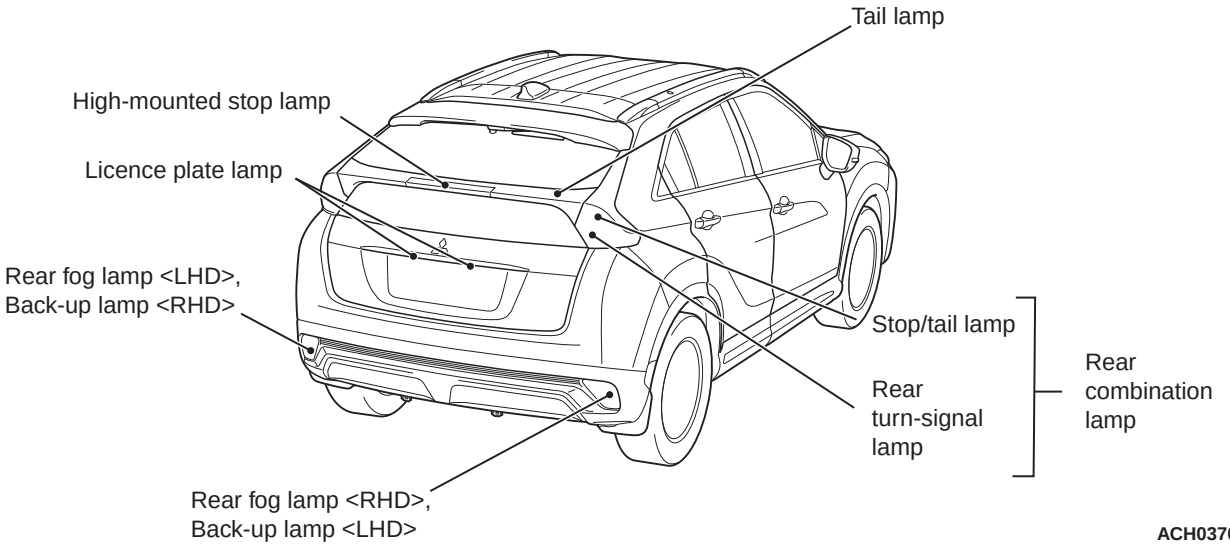

ACH03702 AB

- There are two types of headlamp assemblies: halogen type and LED type (optional).
- The headlamp assembly employs the two-lamp integrated with the headlamp (low/high-beam) and position lamp with daytime running lamp.
- For the low-beam of the headlamp, the headlamp manual levelling system <Vehicles with halogen type headlamp> (Refer to) and the headlamp automatic levelling system <Vehicles with LED type headlamp> (Refer to) have been adopted so that the height adjustment of the optical axis can be performed depending on the vehicle load status.
- The front fog lamp and front turn-signal lamp have been installed to the front bumper.

- The rear fog lamp and back-up lamp have been installed to the rear bumper.
- The side turn-signal lamp have been integrated into the door mirror.
- The rear combination lamp are integrated with the stop lamp, tail lamp and rear turn-signal lamp.
- The tail lamp and high-mounted stop lamp have been integrated into the tailgate.
- The licence plate lamp have been installed to above the licence plate.
- The lighting system is provided with headlamp automatic-shutdown function, auto lamp function, welcome light function and coming home light function (Refer to).
- For the flasher timer function of turn-signal lamp, the comfort flasher function has been adopted to improve the operability when changing the lane. When the turn-signal lamp switch (lighting switch) is operated for a short time, this function flashes the turn-signal lamp of the operated direction three times (Refer to).

Specifications

Item		
Headlamp assembly <Vehicles with halogen type headlamp>	Low/high-beam W	55 (HIR2)
	Position lamp with daytime running lamp	LED type
Headlamp assembly <Vehicles with LED type headlamp>	Low/high-beam	LED type
	Position lamp with daytime running lamp	LED type
Front turn-signal lamp with front fog lamp	Front turn-signal lamp W	21 (PY21W)
	Front fog lamp W	35 (H8)
Rear fog lamp W		21 (W21W)
Back-up lamp W		16 (W16W)
Side turn-signal lamp		LED type
Tail lamp		LED type
Rear combination lamp	Stop lamp	LED type
	Tail lamp	LED type
	Rear turn-signal lamp W	21 (PY21W)
High-mounted stop lamp		LED type
Licence plate lamp W		5 (W5W)

NOTE: The brackets ( ) show the bulb type.

Headlamp manual levelling system

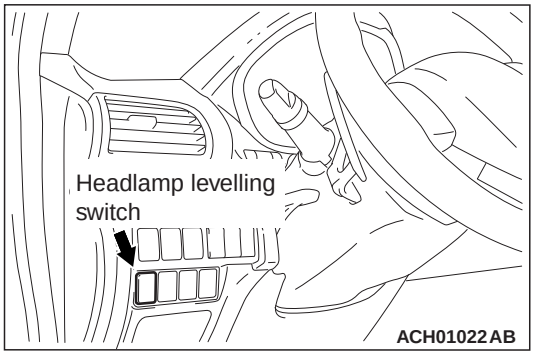

The beam direction of the headlamps changes according to the number of passengers and the amount of load. The headlamp manual levelling function is a system that allows the driver to change the direction of headlamp beam so that the drivers of oncoming cars are not dazzled by the headlamps. The headlamp levelling switch allows changing the direction in five steps: 0 to 4.

Relationship between the switch positions and the number of passengers/loads

Passenger and load	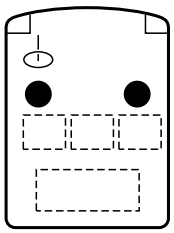 AC607611	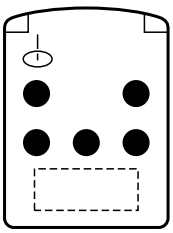 AC607612	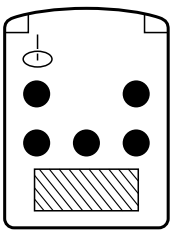 AC607613	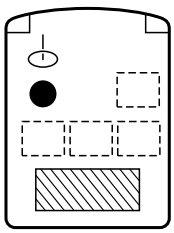 AC607614
	One or two passengers	Five passengers	Five passengers and heavy loads	Driver and heavy loads
Switch position	0	2	3	3 <4WD> or 4 <2WD>

NOTE: Each switch position is for reference. In each switch position, when the headlamp beam is too high, turn the switch to one-level higher position.

Operation

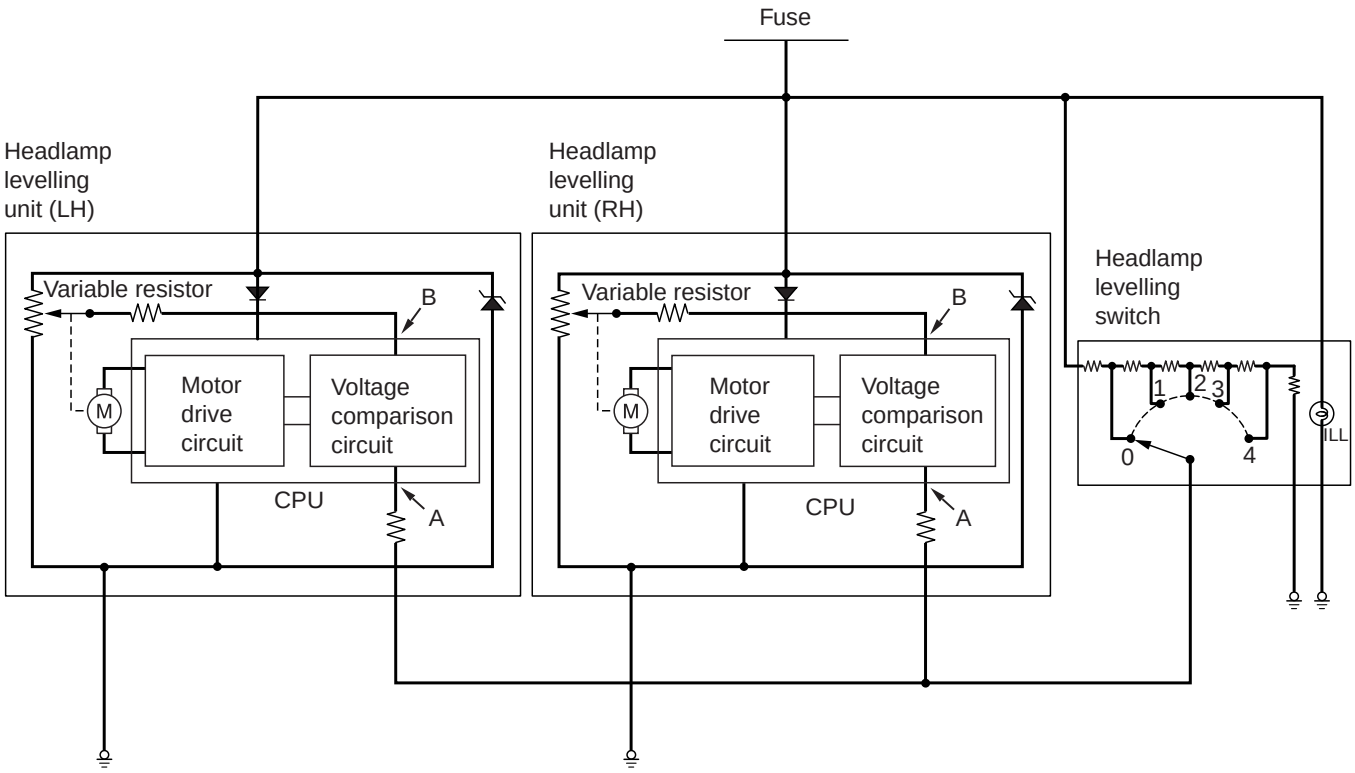

AC314086AB

1. The headlamp levelling switch increases the resistance as it is turned from 0 to 4. Turning the headlamp levelling switch changes the voltage at point A. When the headlamp levelling switch is turned from 0 to 4, the voltage at point A decreases. Upon detection of this voltage change, the headlamp levelling unit turns the motor to lower the beam direction. At this time, the resistance of the variable resistor in the headlamp assembly changes, and the voltage at point B decreases gradually. When the voltages at points A and B become equal, the headlamp levelling unit stops the motor.

2. Turning the headlamp levelling switch from 4 to 0 increases the voltage at point A, and then the headlamp levelling unit turns the motor in the direction opposite to that mentioned in Item 1, increasing the voltage at point B. When the voltages at points A and B become equal, the headlamp levelling unit stops the motor.
3. The headlamp levelling unit detects voltage changes caused by headlamp levelling switch operation, and turns the motor to change the directions of the headlamp reflectors for the adjustment of the headlamp beam direction.

Headlamp automatic levelling system

The beam direction of the headlamps (vertical angle) changes according to the number of passengers and the amount of load. The headlamp automatic levelling system is a system that automatically controls the beam direction of headlamps (up and down angle) when parking or travelling with stable vehicle attitude so that the drivers of oncoming cars and of cars driving in front are not dazzled by the headlamp beam that is directed upwards.

Operational Description

The beam direction of headlamps is automatically controlled according to driving conditions as described in the table below.

Vehicle condition	Control content
When parking	When the engine is stopped with the headlamp (low-beam) ON or when the vehicle is stopped with the headlamp (low-beam) ON and the accelerator pedal is released, the ETACS-ECU controls the beam direction according to the height sensor values of the change in load resulting from getting on/off of passengers or loading/unloading of loads.
When driving at a constant speed	When a vehicle starts on curb, the travelling vehicle posture changes from the posture during parking, so that the beam direction changes. To control the improper beam direction caused by such vehicle attitude change, the ETACS-ECU controls the beam direction while travelling with stable vehicle attitude. This beam direction control while travelling with stable vehicle attitude is performed only once between a vehicle stop and the next stop. When driving is started on a gravel or rough road, the beam direction control is activated after the vehicle attitude becomes stable on a paved road.

System component and function

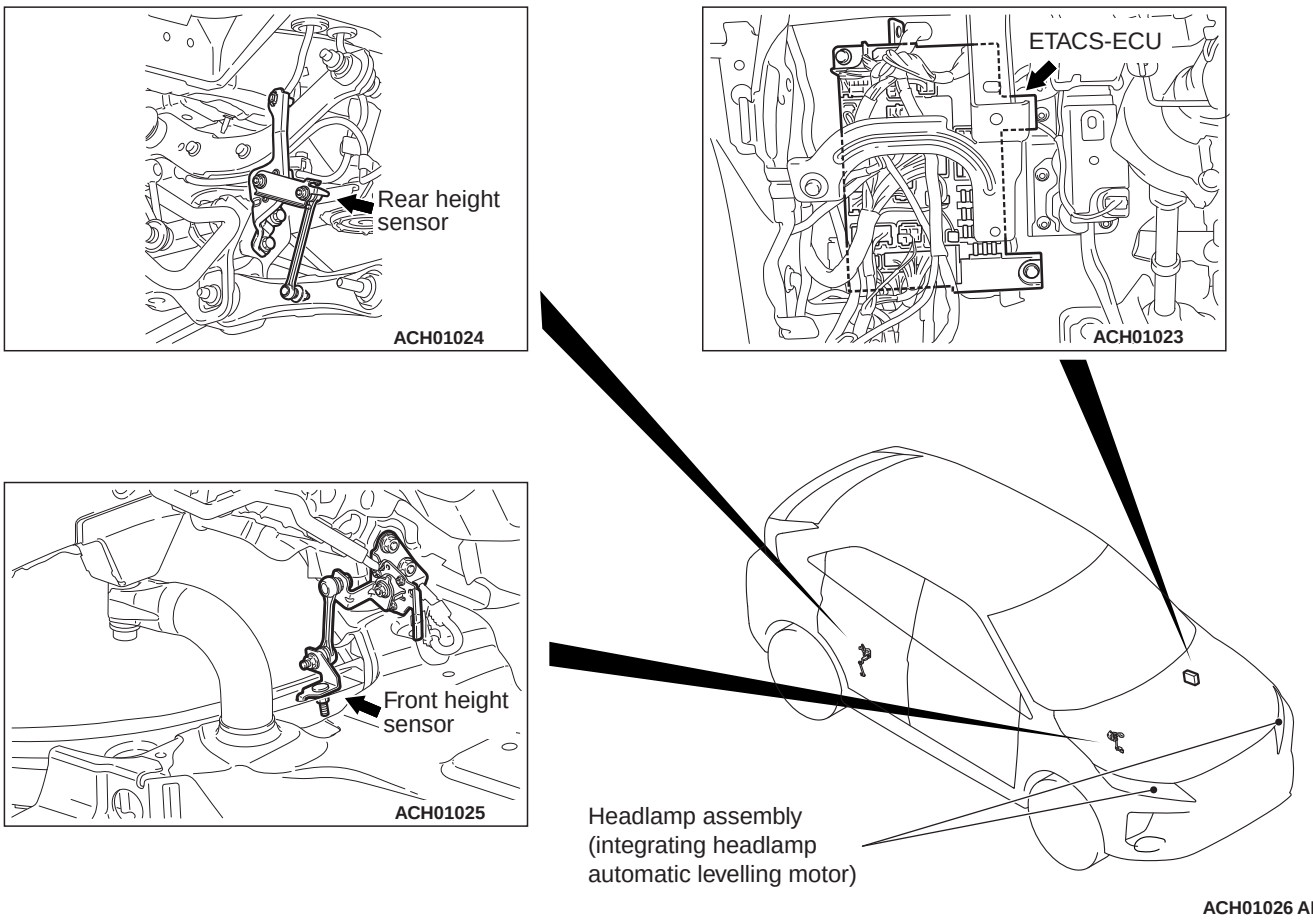

Parts name	Functional description
Ignition switch	Supplies power to the ETACS-ECU when the ignition switch is in the ON position.
Height sensor (front)	Detects the elongation/contraction of the front suspension and transmits the signal to the ETACS-ECU.
Height sensor (rear)	Detects the elongation/contraction of the rear suspension and transmits the signal to the ETACS-ECU.
Headlamp assembly (integrating headlamp automatic levelling motor)	Drives the headlamp reflector by receiving signals from the ETACS-ECU.
Combination meter	Send an odometer indication value to the ETACS-ECU.
ASC-ECU	Transfers the vehicle travel distance information to the ETACS-ECU.
Engine-ECU	Transfers engine speed signals and accelerator pedal position signals to the ETACS-ECU.
ETACS-ECU	• Transfers lighting switch position signals, all door switch ON/OFF signals, tailgate latch switch ON/OFF signals, hazard warning lamp switch ON/OFF signals, headlamp (low-beam) ON/OFF status signals. • Controls the headlamp automatic levelling motor integrated in the headlamp assembly based on the signals form switches and sensors to control the beam direction according to the vehicle posture.

Parts name	Functional description
Diagnosis connector	Outputs diagnosis codes.

System block diagram

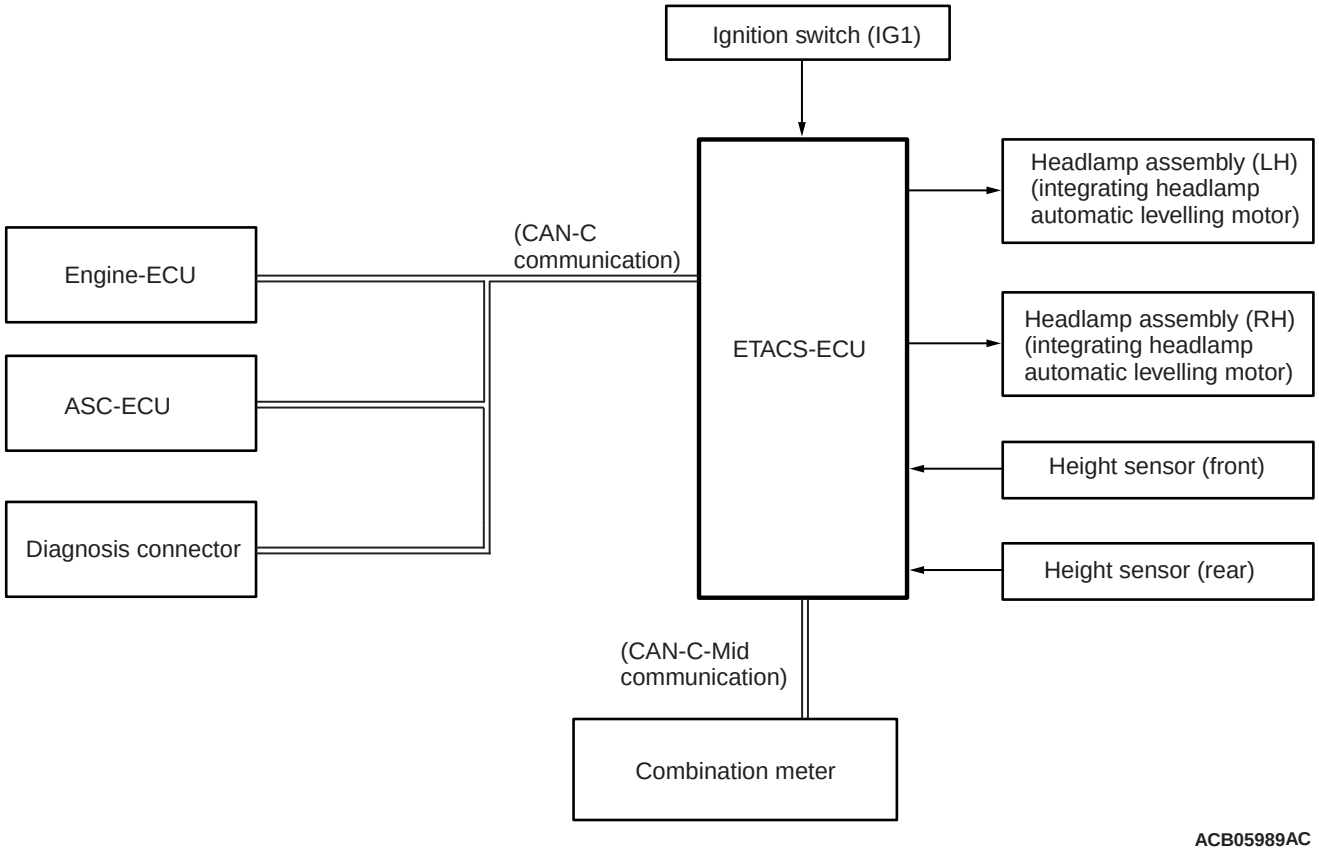

ETACS CUSTOMISATION

Using the ETACS system of M.U.T.-IIISE, the following functions can be programmed. The programmed information is held even when the battery is disconnected.

Adjustment item (M.U.T.-IIISE display)	Adjustment item	Adjusting content (M.U.T.-IIISE display)	Adjusting content
Turn power source	Adjustment of turn-signal lamp operation condition	ACC or IG1	Operable with ACC or ON position
		IG1	Operable with ON position (initial condition)
Comfort flasher	With/without comfort flasher function	Disable	No function
		Enable	With function (initial condition)

Adjustment item (M.U.T.-IIISE display)	Adjustment item	Adjusting content (M.U.T.-IIISE display)	Adjusting content
Hazard answer back	Adjustment of the number of keyless hazard warning lamp answer back flashes	Lock: 1, Unlock: 2	LOCK: Flashes once, UNLOCK: Flashes twice (initial condition)
		Lock: 1, Unlock: 0	LOCK: Flashes once, UNLOCK: No flash
		Lock: 0, Unlock: 2	LOCK: No flash, UNLOCK: Flash twice
		Lock: 2, Unlock: 1	LOCK: Flash twice, UNLOCK: Flash once
		Lock: 2, Unlock: 0	LOCK: Flash twice, UNLOCK: No flash
		Lock: 0, Unlock: 1	LOCK: No flash, UNLOCK: Flash once
		Lock: 0, Unlock: 0	No function
Front wiper operation	Adjustment of the intermittent windshield wiper operation	Normal INT	Intermittent wiper interval is fixed to 4 seconds.
		Variable INT	Intermittent wiper interval is calculated only by the wiper volume control.
		Speed Sensitive	Intermittent wiper interval is calculated according to the intermittent wiper volume control and vehicle speed.
		Rain Sensitive	Intermittent wiper interval is calculated according to the intermittent wiper volume control and lighting control sensor (initial condition).
Front/rear wiper washer	Disabling or enabling washer-linked wiper function	Only Washer	No function
		Washer & Wiper	With function: Without delayed finishing wipe function
		Washer & Wiper with after wiper	With function: With delayed finishing wipe function <Initial condition>
Intermittent time of rear wiper	Adjustment of rear wiper interval	0 sec.	No wiper interval
		4 sec.	4 seconds
		8 sec.	8 seconds (initial condition)
		16 sec.	16 seconds
Rear wiper low speed mode	Disabling or enabling rear wiper continuous operation	Disable	No function
		Enable	With function (initial condition)
Auto fold mirror	Electric folding door mirror automatic unfolding function <Vehicles with electric retractable remote controlled door mirrors>	Not Auto	No synchronised operation
		Open by vehicle speed	Vehicle speed-dependent operation
		Open/Close by IG	Ignition switch linked operation
		Open/Close by Keyless	Keyless entry linked operation (initial condition)

Adjustment item (M.U.T.-IIISE display)	Adjustment item	Adjusting content (M.U.T.-IIISE display)	Adjusting content
Sensitivity for auto lamp	Lighting control sensor sensitivity (illumination intensity)	Level 1 bright	High-high ambient brightness
		Level 2 bright	High ambient brightness
		Level 3	Standard ambient brightness (initial condition)
		Level 4 dark	Low ambient brightness
		Level 5 dark	Low-low ambient brightness
Room lamp delay timer with door	Adjustment of interior lamp delay shutdown time	0 sec.	0 second (no delay shutdown time)
		7.5 sec.	7.5 seconds
		15 sec.	15 seconds (initial condition)
		30 sec.	30 seconds
		60 sec.	60 seconds
		120 sec.	120 seconds
		180 sec.	180 seconds
Head lamp auto cut customize	Adjustment of headlamp automatic shutdown function	Disable	No function
		Enable (B-spec.)	With function (initial condition)
Interior lamp auto cut timer	Adjustment of interior lamp automatic shutdown function operation time	Disable	No function
		3 min	3 minutes
		30 min	30 minutes (initial condition)
		60 min	60 minutes
Auto door unlock	Adjustment of the auto door unlock function	Disable	Without function <M/T, CVT> (initial condition)
		Always(Shift P position)	With function: Operates when the shift lever or the selector lever is moved to the P position. <CVT>
		Always(IG lock position)	With function: Operates when the ignition switch is moved to the LOCK (OFF) position. <M/T, CVT>
Door unlock mode	Adjustment of power door locks with selective unlocking <Vehicles without dead lock system>	All Doors unlock	Without function: The first operation of keyless entry system or unlock operation by KOS unlocks all doors (initial condition).
		Driver's door unlock	With function: The first operation of keyless entry system or unlock operation by KOS unlocks the driver's door only, and the second unlock operation within 2 seconds after that unlocks all doors.
Deadlock button operation	Adjustment of the dead lock system setting procedure <Vehicles with dead lock system>	Twice	Operate the lock switch of the keyless entry system or KOS twice.(initial condition)
		Once	Operate the lock switch of the keyless entry system or KOS once.

Adjustment item (M.U.T.-IIISE display)	Adjustment item	Adjusting content (M.U.T.-IIISE display)	Adjusting content
Timer lock timer	Timer lock period adjustment	30 sec.	30 seconds (initial condition)
		60 sec.	60 seconds
		120 sec.	120 seconds
		180 sec.	180 seconds
Alarm	Enables/disables security alarm <Vehicles with security alarm>	Disable	Without function
		Enable	With function (initial condition)
Duration of pre-alarm	Adjustment of pre-alarm (interior alarm) continue time <Vehicles with security alarm (Without security alarm sensor)>	10 sec.	10 seconds (initial condition)
		6 sec.	6 seconds
Multi mode	Multi-mode keyless entry function customisation <Vehicles with electric retractable remote controlled door mirrors>	Disable	No function
		D/M: Open & Close	Door mirror fold/unfold operation only (initial condition)
KOS key detect out from window	With/without KOS key exterior detection function <Vehicles with KOS>	Enable	No function
		Disable	With function (initial condition)
KOS feature	KOS function adjustment <Vehicles with KOS>	Both enable	All KOS functions are enabled (initial condition).
		Door entry enable	Only door entry function is enabled.
		ENG start enable	Only engine starting function is enabled.
		Both disable	All KOS functions are disabled.
KOS unlock disable time	Adjusts the door unlock inhibition period after door lock is activated. <Vehicles with KOS>	0 sec.	0 second
		3 sec.	3 seconds (Initial condition)
		5 sec.	5 seconds
ACC power auto cut time	Time to ACC power cut-off when the ignition switch is in the ACC position	Disable	No function
		30 min	30 minutes (initial condition)
		60 min	60 minutes
Comfort flasher switch time	Switch operation time to activate the comfort flasher function	Normal	0.4 second (initial condition)
		Long	0.8 second

Adjustment item (M.U.T.-IIISE display)	Adjustment item	Adjusting content (M.U.T.-IIISE display)	Adjusting content
Intelligent/ Comfort washer	With/without Comfort washer function	Disable	No function
		Enable	With function
Coming home lamp	Disabling or enabling coming home light function	Disable	No function
		15 sec.	The headlamps illuminate for 15 seconds.
		30 sec.	The headlamps illuminate for 30 seconds. (initial condition)
		60 sec.	The headlamps illuminate for 60 seconds.
		180 sec.	The headlamps illuminate for 180 seconds.
Welcome lamp	Disabling or enabling welcome light function	Disable	No function
		Small lamp	The tail lamps illuminate. <initial condition>
		Headlamp	The headlamps illuminate.
Rear wiper (linked reverse gear)	Adjustment of automatic rear window wiper operation with reverse gear engaged	Enable(Rear wiper ON)	Operates only when the rear wiper switch is ON.
		Enable(Rear/Front wiper ON)	Operates only when the front or rear wiper switch is ON (initial condition).
Sensitivity for security sensor	Sensitivity level setting of security alarm sensor <Vehicles with security alarm (With security alarm sensor)>	Level 1	100% sensitivity of security alarm sensor (initial condition)
		Level 2	90% sensitivity of security alarm sensor
		Level 3	80% sensitivity of security alarm sensor
		Level 4	70% sensitivity of security alarm sensor
Outer buzzer volume	KOS outer buzzer volume adjustment <Vehicles with KOS>	Volume 1	Quieter than the standard
		Volume 2	Standard volume (Initial condition)
		Volume 3	Louder than the standard
A/C recirculation control	With/without inside/ outside air automatic control function	Disable	No function
		Enable	With function (Initial condition)
A/C switch control	With/without A/C automatic control function	Disable	No function
		Enable	With function (Initial condition)

Adjustment item (M.U.T.-IIISE display)	Adjustment item	Adjusting content (M.U.T.-IIISE display)	Adjusting content
A/C sensible temperature customize	Adjusting mean value for temperature setting	-2	Decreases the control temperature two degrees than the temperature displayed on the LCD.
		-1	Decreases the control temperature one degree than the temperature displayed on the LCD.
		0	No change (Initial condition)
		1	Increases the control temperature one degree than the temperature displayed on the LCD.
		2	Increases the control temperature two degrees than the temperature displayed on the LCD.
ECO mode	Function to activate ECO mode air-conditioner	ECO	Activates the ECO mode.
		Comfort	Deactivates the ECO mode.
FOOT / DEF air outlet ratio	Changes air distribution rate for DEF/FOOT vents during manual operation.	Normal	D/F2 (Initial condition)
		FOOT > DEF	D/F1(more to FOOT vent): More air flows through FOOT vents.
		FOOT < DEF	D/F3(more to DEF vent): More air flows through DEF vents.
FACE / FOOT air outlet ratio	Changes air distribution rate for FACE/FOOT vents during manual operation.	Normal	B/L2 (Initial condition)
		FACE > FOOT	B/L1(more to FACE vent): More air flows through FACE vents.
		FACE < FOOT	B/L3(more to FOOT vent): More air flows through FOOT vents.
Auto rear defogger (Engine start)	Activates the rear window defogger when the ambient temperature is low. (The rear window defogger has never been activated since the ignition switch was turned on last time)	Disable	No function (Initial condition)
		Enable	With function

4.1.2. Alignment

M6131000200015

<USING A BEAM SETTING EQUIPMENT>

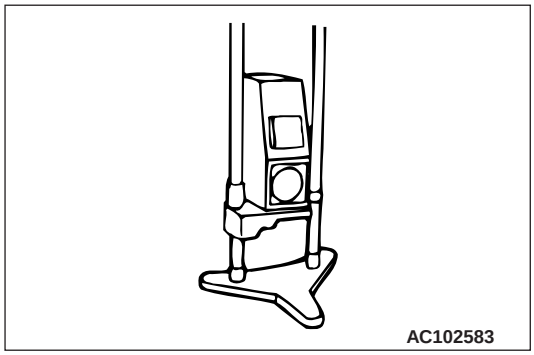
AC102583

1. The headlamps should be aimed with the proper beam setting equipment, and in accordance with the equipment manufacture's instructions.
2. Alternately turn the adjusting screw to adjust the headlamp aiming.

<USING A SCREEN> (LOW-BEAM)

PRE-AIMING INSTRUCTION

1. Inspect for badly rusted or faulty headlamp assemblies.
2. These conditions must be corrected before a satisfactory adjustment can be made.
3. Inspect tyre inflation, and adjust if it is necessary.
4. If the fuel tank is not filled up, put weight in the luggage compartment to make up for the fuel shortage so that the weight will become 90% of full-state weight or heavier. (0.8 kg per litter)
5. There should be no other load in the vehicle other than driver or substituted weight of approximately 75 kg placed in driver's position.
6. Turn the headlamp levelling switch to the switch position "0." <Vehicles with headlamp manual levelling system>
7. Change the vehicle posture, and then operate the actuator of headlamp levelling unit once. <Vehicles with headlamp automatic levelling system>
8. Thoroughly clean the headlamp lenses.

⚠ CAUTION

Check that the square shaped marking (LED headlamp) or round shaped marking (halogen headlamp) is on the lens surface.

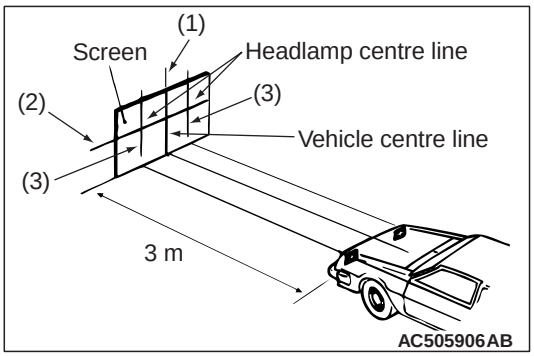

AC505906AB

<Vehicles with LED headlamp>

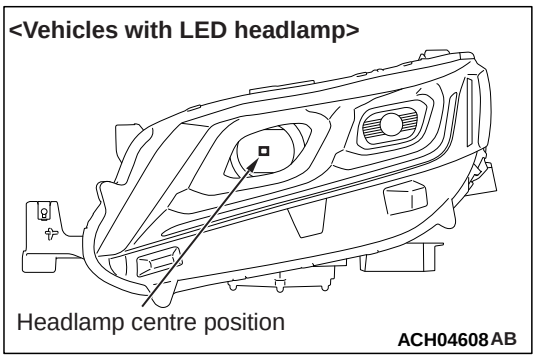

ACH04608AB

<Vehicles with halogen headlamp>

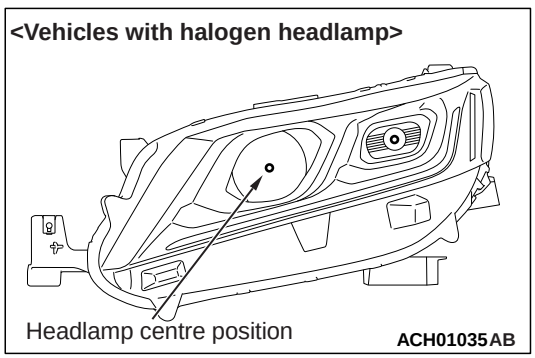

ACH01035AB

9. Place the vehicle on a level floor, perpendicular to a flat screen 3 m away from the headlamp centre position of the low-beam.
10. Rock vehicle sideways to allow vehicle to assume its normal position.
11. To correct for distortion of the suspension, rock the bumpers on the front/rear side of the vehicle up and down three times alternately.
12. Run the engine at a speed of 2,000 r/min to charge the battery.
13. Four lines of adhesive tape (or equivalent markings) are required on screen or wall:
    (1) Position a vertical tape or mark so that it is aligned with the vehicle centre line.

(2) Measure the distance from the headlamp centre position to the floor. Transfer the measurement to the screen. Horizontal tape or mark on the screen is for reference of vertical adjustment.
(3) Measure the distance from the centre line of the vehicle to the centre of each headlamp. Transfer the measurement to the screen. Vertical tape or mark on the screen with reference to the centre line of each headlamp.

HEADLAMP ADJUSTMENT

⚠ CAUTION

Do not cover a headlamp for more than three minutes to prevent the plastic headlamp lens deformation.

1. The low-beam headlamp should project on the screen upper edge of the beam (cut-off).

⚠ CAUTION

Be sure to adjust the aiming adjustment screw in the tightening direction.

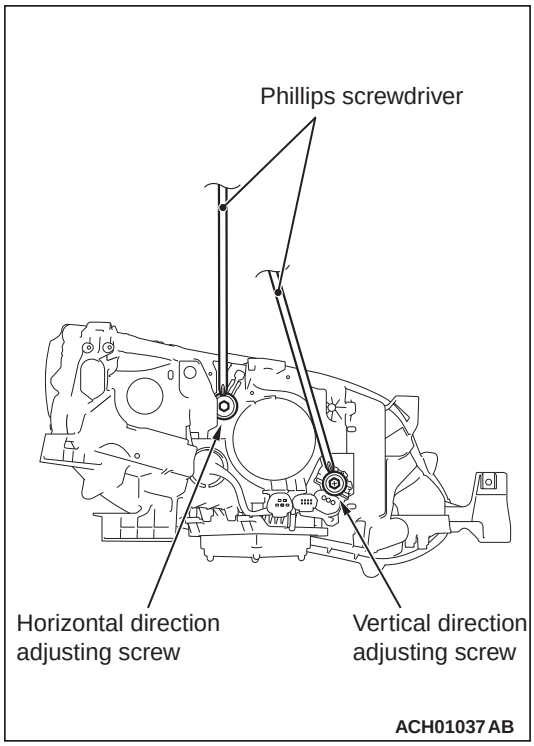

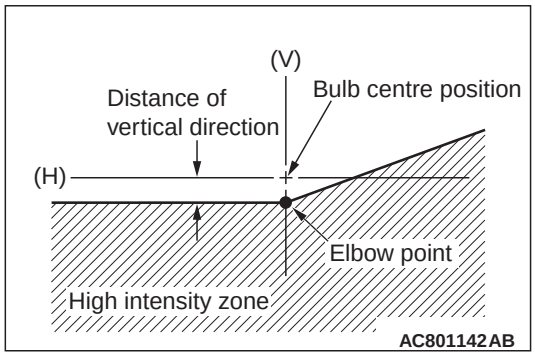

2. If not the case, turn the adjusting screws to achieve the specified low-beam cut-off location on the aiming screen.

   Standard value:
   Vertical direction; 36 mm (0.69°) below horizontal (H)
   Horizontal direction; Elbow point intersects the vertical line (V)

   Limit:
   Vertical direction; ±15 mm (±0.29°) from the horizontal cut-off line
   Horizontal direction; ± 26 mm (± 0.5°) from the vertical line (V)

   NOTE: The illustration shows LH drive vehicles. For RH drive vehicles, it is symmetrical.

4.1.3. Switching

M6131000300012

Headlamps

NOTE:

- *When entering a country in which vehicles are driven on the opposite side of the road to the country in which your vehicles is supplied, necessary measures have to be taken to avoid dazzling oncoming traffic. However, headlamps on this vehicle do not need any adjustment.*
- *Do not leave the lights on for a long time while the engine is stationary (not running).A run-down battery could result.*
- *When it rains, or when the vehicle has been washed, the inside of the lens sometimes becomes foggy, but this does not indicate a functional problem. When the lamp is switched on, the heat will remove the fog. However, if water gathers inside the lamp, we recommend you to have checked.*

Rotate the switch to turn on the lamps.

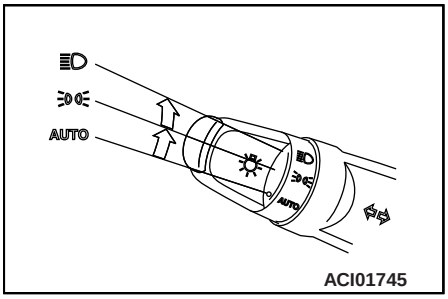

AUTO	With the ignition switch or the operation mode is in ON, headlamps, position, tail, licence plate, instrument panel lamps turn on and off automatically in accordance with outside light level. {Daytime running lamps will go on while the tail lamps are off.} All lamps turn off automatically when the ignition switch is turned to “LOCK” position or the operation mode is put in OFF.
	Position, tail, licence plate and instrument panel lamps on
	Headlamps and other lamps go on

NOTE:

- *When the headlamps are turned off by the automatic on/off control with the ignition switch in the “ON” position or the operation mode in ON, the front fog lamp (if so equipped) and rear fog lamps also go off. When the headlamps are subsequently turned back on by the automatic on/off control, the front fog lamps also come on but the rear fog lamp stay off. If you wish to turn the rear fog lamp back on, operate the switch again.*

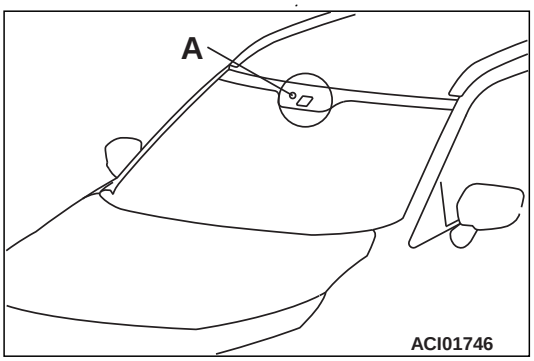

Do not cover the sensor (A) for the automatic on/off control by affixing a sticker or label to the windscreen.

- *If the lamps do not turn on or off with the switch in the “AUTO” position, manually operate the switch and we recommend you to have your vehicle checked.*

4.1.4. Compliance with requirements1.

M6131000400019

"Not Applicable"

4.1.5. Levelling devices (where mandatory)

M6131000500016

Construction diagram

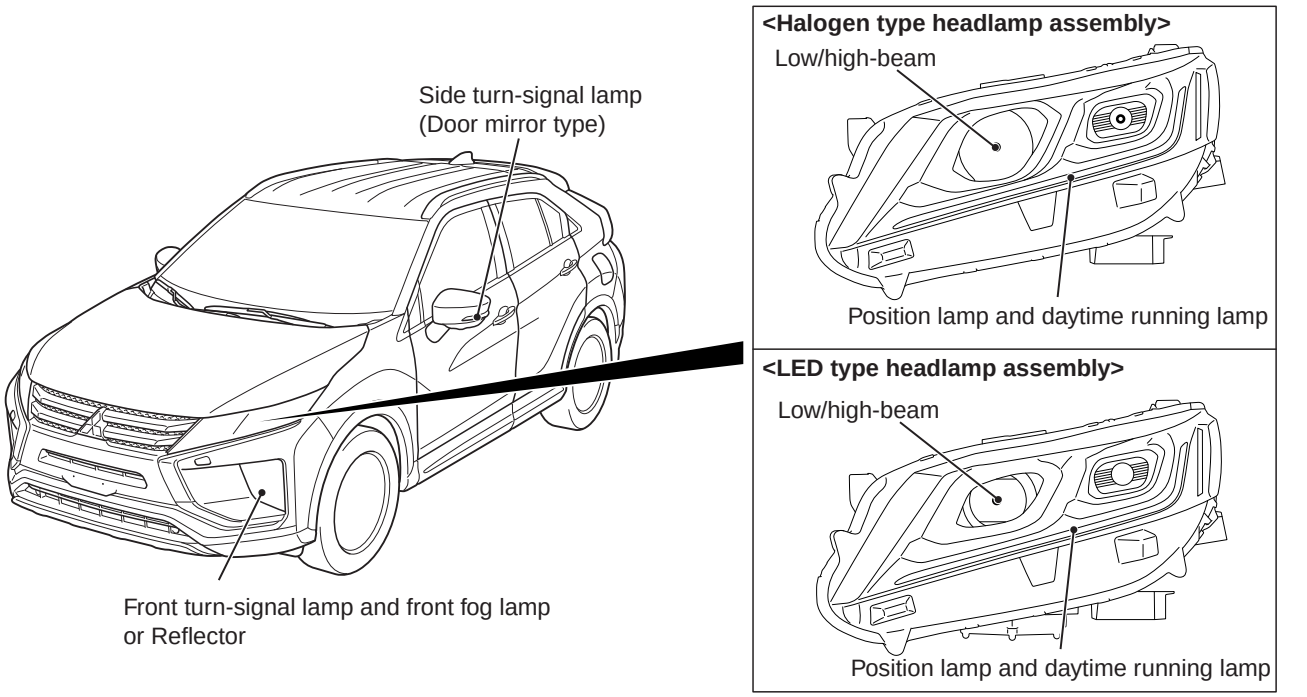

ACH03701AB

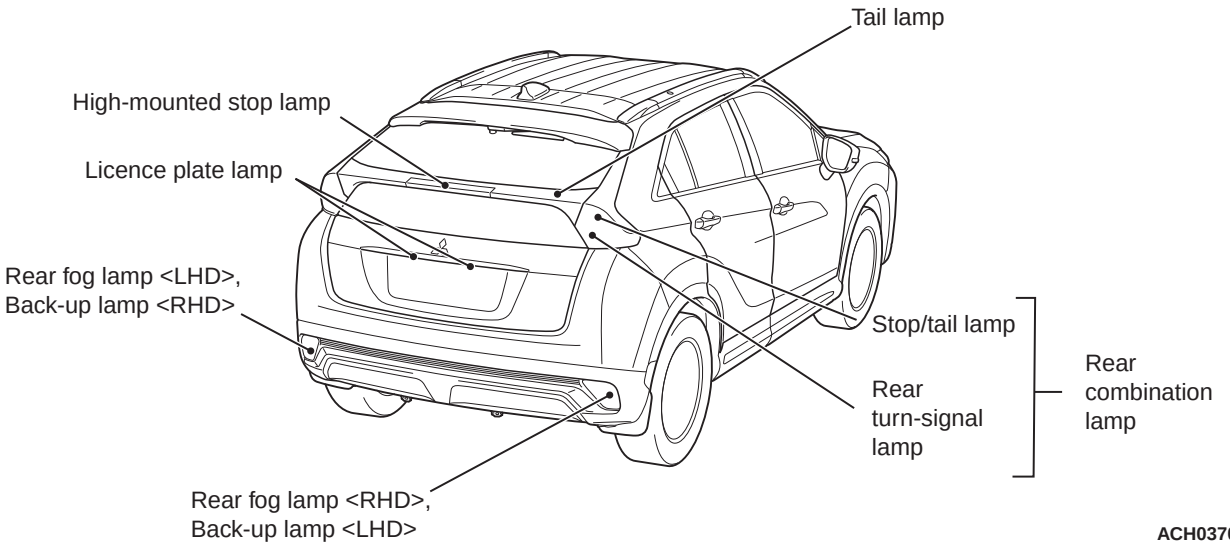

ACH03702 AB

- There are two types of headlamp assemblies: halogen type and LED type (optional).
- The headlamp assembly employs the two-lamp integrated with the headlamp (low/high-beam) and position lamp with daytime running lamp.
- For the low-beam of the headlamp, the headlamp manual levelling system <Vehicles with halogen type headlamp> (Refer to) and the headlamp automatic levelling system <Vehicles with LED type headlamp> (Refer to) have been adopted so that the height adjustment of the optical axis can be performed depending on the vehicle load status.
- The front fog lamp and front turn-signal lamp have been installed to the front bumper.
- The rear fog lamp and back-up lamp have been installed to the rear bumper.

- The side turn-signal lamp have been integrated into the door mirror.
- The rear combination lamp are integrated with the stop lamp, tail lamp and rear turn-signal lamp.
- The tail lamp and high-mounted stop lamp have been integrated into the tailgate.
- The licence plate lamp have been installed to above the licence plate.
- The lighting system is provided with headlamp automatic-shutdown function, auto lamp function, welcome light function and coming home light function (Refer to).
- For the flasher timer function of turn-signal lamp, the comfort flasher function has been adopted to improve the operability when changing the lane. When the turn-signal lamp switch (lighting switch) is operated for a short time, this function flashes the turn-signal lamp of the operated direction three times (Refer to).

Specifications

Item		
Headlamp assembly <Vehicles with halogen type headlamp>	Low/high-beam W	55 (HIR2)
	Position lamp with daytime running lamp	LED type
Headlamp assembly <Vehicles with LED type headlamp>	Low/high-beam	LED type
	Position lamp with daytime running lamp	LED type
Front turn-signal lamp with front fog lamp	Front turn-signal lamp W	21 (PY21W)
	Front fog lamp W	35 (H8)
Rear fog lamp W		21 (W21W)
Back-up lamp W		16 (W16W)
Side turn-signal lamp		LED type
Tail lamp		LED type
Rear combination lamp	Stop lamp	LED type
	Tail lamp	LED type
	Rear turn-signal lamp W	21 (PY21W)
High-mounted stop lamp		LED type
Licence plate lamp W		5 (W5W)

NOTE: The brackets ( ) show the bulb type.

Headlamp manual levelling system

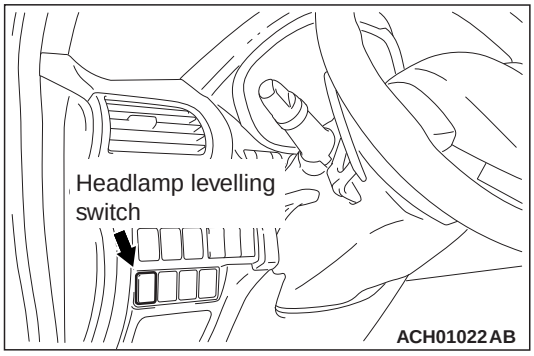

The beam direction of the headlamps changes according to the number of passengers and the amount of load. The headlamp manual levelling function is a system that allows the driver to change the direction of headlamp beam so that the drivers of oncoming cars are not dazzled by the headlamps. The headlamp levelling switch allows changing the direction in five steps: 0 to 4.

Relationship between the switch positions and the number of passengers/loads

Passenger and load	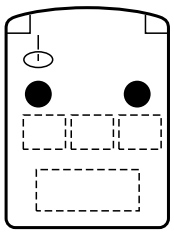 AC607611	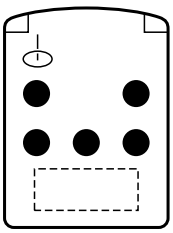 AC607612	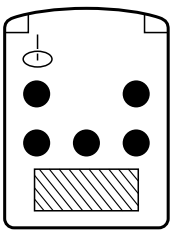 AC607613	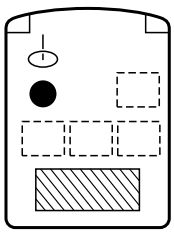 AC607614
	One or two passengers	Five passengers	Five passengers and heavy loads	Driver and heavy loads
Switch position	0	2	3	3 <4WD> or 4 <2WD>

NOTE: Each switch position is for reference. In each switch position, when the headlamp beam is too high, turn the switch to one-level higher position.

Operation

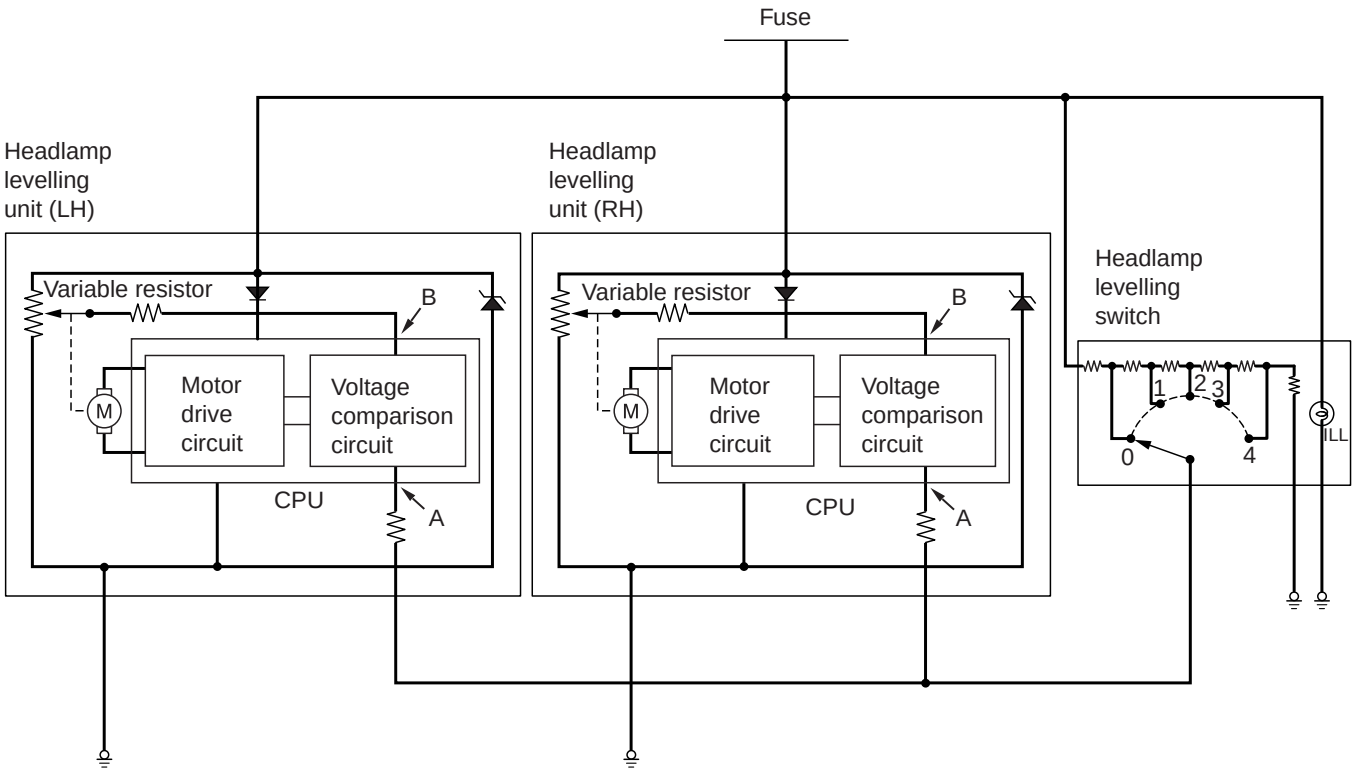

AC314086AB

1. The headlamp levelling switch increases the resistance as it is turned from 0 to 4. Turning the headlamp levelling switch changes the voltage at point A. When the headlamp levelling switch is turned from 0 to 4, the voltage at point A decreases. Upon detection of this voltage change, the headlamp levelling unit turns the motor to lower the beam direction. At this time, the resistance of the variable resistor in the headlamp assembly changes, and the voltage at point B decreases gradually. When the voltages at points A and B become equal, the headlamp levelling unit stops the motor.

2. Turning the headlamp levelling switch from 4 to 0 increases the voltage at point A, and then the headlamp levelling unit turns the motor in the direction opposite to that mentioned in Item 1, increasing the voltage at point B. When the voltages at points A and B become equal, the headlamp levelling unit stops the motor.
3. The headlamp levelling unit detects voltage changes caused by headlamp levelling switch operation, and turns the motor to change the directions of the headlamp reflectors for the adjustment of the headlamp beam direction.

Headlamp automatic levelling system

The beam direction of the headlamps (vertical angle) changes according to the number of passengers and the amount of load. The headlamp automatic levelling system is a system that automatically controls the beam direction of headlamps (up and down angle) when parking or travelling with stable vehicle attitude so that the drivers of oncoming cars and of cars driving in front are not dazzled by the headlamp beam that is directed upwards.

Operational Description

The beam direction of headlamps is automatically controlled according to driving conditions as described in the table below.

Vehicle condition	Control content
When parking	When the engine is stopped with the headlamp (low-beam) ON or when the vehicle is stopped with the headlamp (low-beam) ON and the accelerator pedal is released, the ETACS-ECU controls the beam direction according to the height sensor values of the change in load resulting from getting on/off of passengers or loading/unloading of loads.
When driving at a constant speed	When a vehicle starts on curb, the travelling vehicle posture changes from the posture during parking, so that the beam direction changes. To control the improper beam direction caused by such vehicle attitude change, the ETACS-ECU controls the beam direction while travelling with stable vehicle attitude. This beam direction control while travelling with stable vehicle attitude is performed only once between a vehicle stop and the next stop. When driving is started on a gravel or rough road, the beam direction control is activated after the vehicle attitude becomes stable on a paved road.

System component and function

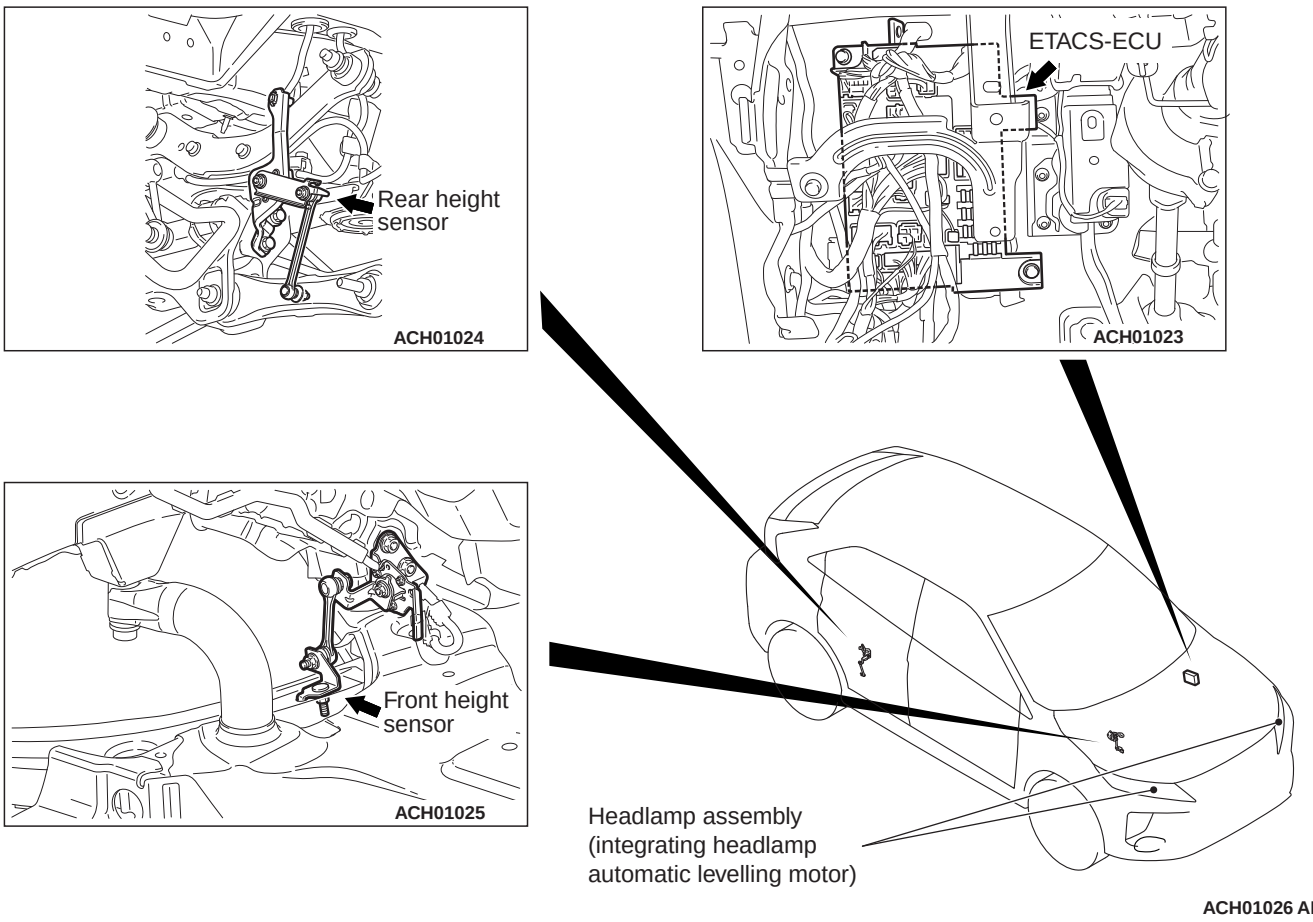

Parts name	Functional description
Ignition switch	Supplies power to the ETACS-ECU when the ignition switch is in the ON position.
Height sensor (front)	Detects the elongation/contraction of the front suspension and transmits the signal to the ETACS-ECU.
Height sensor (rear)	Detects the elongation/contraction of the rear suspension and transmits the signal to the ETACS-ECU.
Headlamp assembly (integrating headlamp automatic levelling motor)	Drives the headlamp reflector by receiving signals from the ETACS-ECU.
Combination meter	Send an odometer indication value to the ETACS-ECU.
ASC-ECU	Transfers the vehicle travel distance information to the ETACS-ECU.
Engine-ECU	Transfers engine speed signals and accelerator pedal position signals to the ETACS-ECU.
ETACS-ECU	• Transfers lighting switch position signals, all door switch ON/OFF signals, tailgate latch switch ON/OFF signals, hazard warning lamp switch ON/OFF signals, headlamp (low-beam) ON/OFF status signals. • Controls the headlamp automatic levelling motor integrated in the headlamp assembly based on the signals form switches and sensors to control the beam direction according to the vehicle posture.

Parts name	Functional description
Diagnosis connector	Outputs diagnosis codes.

System block diagram

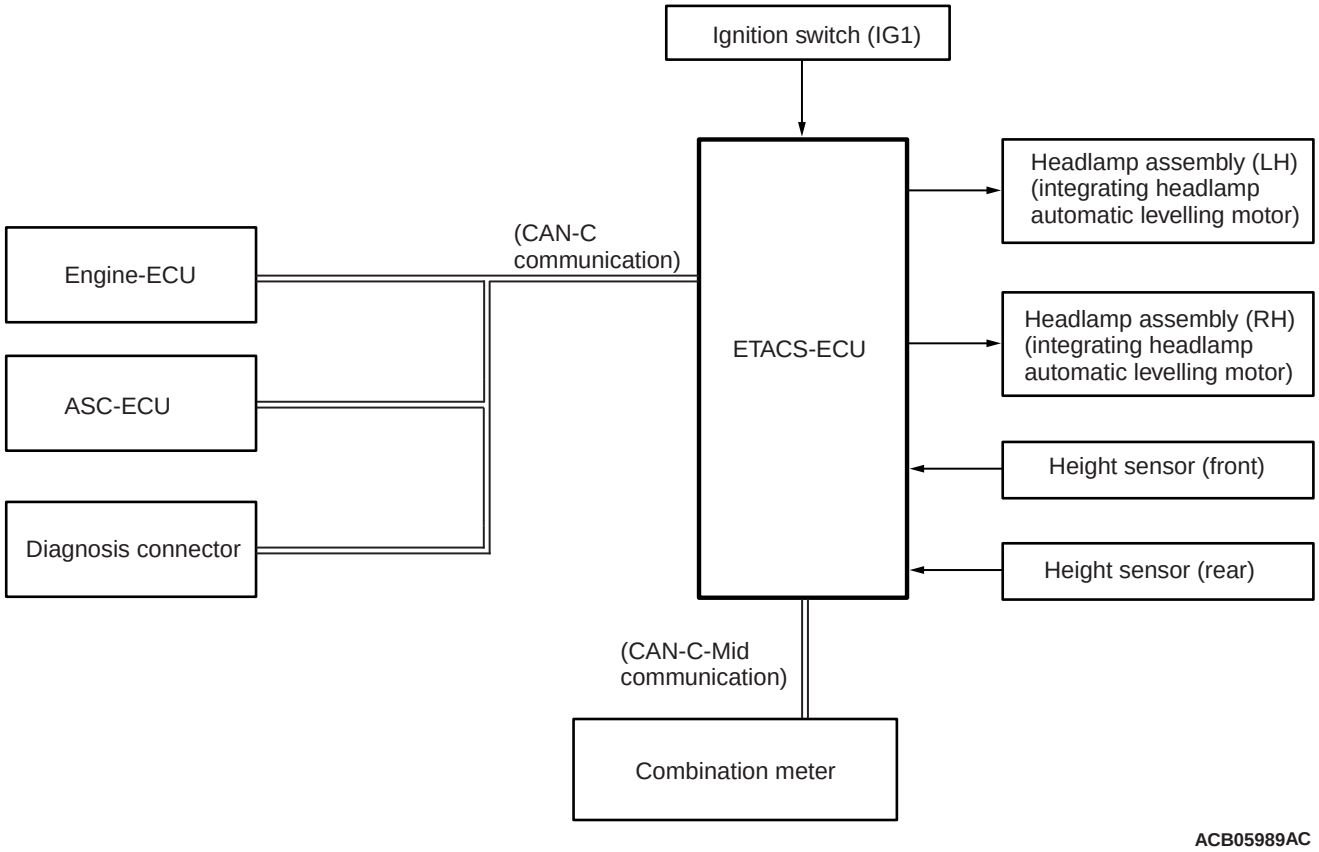

OPERATION CHECK OF HEADLAMP AUTOMATIC LEVELLING

With this inspection, it is simply checked that the headlamp automatic levelling motor incorporated in the headlamp assembly moves in accordance with the vehicle posture.

INSPECTION PROCEDURE

1. Park the vehicle on a level surface.
2. Turn the ignition switch to "ON" position. (Do not start up the engine.)
3. At the front or rear jack up point, raise the front wheels or rear wheels off the earth.
4. Turn ON the headlamp switch.
5. When the front wheels are raised, the upward headlamp beam is controlled with the control value applicable to the present vehicle posture, and the headlamp beam moves downward.
6. When the rear wheels are raised, the downward headlamp beam is controlled with the control value applicable to the present vehicle posture, and the headlamp beam moves upward.

ETACS CUSTOMISATION

Using the ETACS system of M.U.T.-IIISE, the following functions can be programmed. The programmed information is held even when the battery is disconnected.

Adjustment item (M.U.T.-IIISE display)	Adjustment item	Adjusting content (M.U.T.-IIISE display)	Adjusting content
Turn power source	Adjustment of turn-signal lamp operation condition	ACC or IG1	Operable with ACC or ON position
		IG1	Operable with ON position (initial condition)

Adjustment item (M.U.T.-IIISE display)	Adjustment item	Adjusting content (M.U.T.-IIISE display)	Adjusting content
Comfort flasher	With/without comfort flasher function	Disable	No function
		Enable	With function (initial condition)
Hazard answer back	Adjustment of the number of keyless hazard warning lamp answer back flashes	Lock: 1, Unlock: 2	LOCK: Flashes once, UNLOCK: Flashes twice (initial condition)
		Lock: 1, Unlock: 0	LOCK: Flashes once, UNLOCK: No flash
		Lock: 0, Unlock: 2	LOCK: No flash, UNLOCK: Flash twice
		Lock: 2, Unlock: 1	LOCK: Flash twice, UNLOCK: Flash once
		Lock: 2, Unlock: 0	LOCK: Flash twice, UNLOCK: No flash
		Lock: 0, Unlock: 1	LOCK: No flash, UNLOCK: Flash once
		Lock: 0, Unlock: 0	No function
Front wiper operation	Adjustment of the intermittent windshield wiper operation	Normal INT	Intermittent wiper interval is fixed to 4 seconds.
		Variable INT	Intermittent wiper interval is calculated only by the wiper volume control.
		Speed Sensitive	Intermittent wiper interval is calculated according to the intermittent wiper volume control and vehicle speed.
		Rain Sensitive	Intermittent wiper interval is calculated according to the intermittent wiper volume control and lighting control sensor (initial condition).
Front/rear wiper washer	Disabling or enabling washer-linked wiper function	Only Washer	No function
		Washer & Wiper	With function: Without delayed finishing wipe function
		Washer & Wiper with after wiper	With function: With delayed finishing wipe function <Initial condition>
Intermittent time of rear wiper	Adjustment of rear wiper interval	0 sec.	No wiper interval
		4 sec.	4 seconds
		8 sec.	8 seconds (initial condition)
		16 sec.	16 seconds
Rear wiper low speed mode	Disabling or enabling rear wiper continuous operation	Disable	No function
		Enable	With function (initial condition)
Auto fold mirror	Electric folding door mirror automatic unfolding function <Vehicles with electric retractable remote controlled door mirrors>	Not Auto	No synchronised operation
		Open by vehicle speed	Vehicle speed-dependent operation
		Open/Close by IG	Ignition switch linked operation
		Open/Close by Keyless	Keyless entry linked operation (initial condition)

Adjustment item (M.U.T.-IIISE display)	Adjustment item	Adjusting content (M.U.T.-IIISE display)	Adjusting content
Sensitivity for auto lamp	Lighting control sensor sensitivity (illumination intensity)	Level 1 bright	High-high ambient brightness
		Level 2 bright	High ambient brightness
		Level 3	Standard ambient brightness (initial condition)
		Level 4 dark	Low ambient brightness
		Level 5 dark	Low-low ambient brightness
Room lamp delay timer with door	Adjustment of interior lamp delay shutdown time	0 sec.	0 second (no delay shutdown time)
		7.5 sec.	7.5 seconds
		15 sec.	15 seconds (initial condition)
		30 sec.	30 seconds
		60 sec.	60 seconds
		120 sec.	120 seconds
		180 sec.	180 seconds
Head lamp auto cut customize	Adjustment of headlamp automatic shutdown function	Disable	No function
		Enable (B-spec.)	With function (initial condition)
Interior lamp auto cut timer	Adjustment of interior lamp automatic shutdown function operation time	Disable	No function
		3 min	3 minutes
		30 min	30 minutes (initial condition)
		60 min	60 minutes
Auto door unlock	Adjustment of the auto door unlock function	Disable	Without function <M/T, CVT> (initial condition)
		Always(Shift P position)	With function: Operates when the shift lever or the selector lever is moved to the P position. <CVT>
		Always(IG lock position)	With function: Operates when the ignition switch is moved to the LOCK (OFF) position. <M/T, CVT>
Door unlock mode	Adjustment of power door locks with selective unlocking <Vehicles without dead lock system>	All Doors unlock	Without function: The first operation of keyless entry system or unlock operation by KOS unlocks all doors (initial condition).
		Driver's door unlock	With function: The first operation of keyless entry system or unlock operation by KOS unlocks the driver's door only, and the second unlock operation within 2 seconds after that unlocks all doors.
Deadlock button operation	Adjustment of the dead lock system setting procedure <Vehicles with dead lock system>	Twice	Operate the lock switch of the keyless entry system or KOS twice.(initial condition)
		Once	Operate the lock switch of the keyless entry system or KOS once.

Adjustment item (M.U.T.-IIISE display)	Adjustment item	Adjusting content (M.U.T.-IIISE display)	Adjusting content
Timer lock timer	Timer lock period adjustment	30 sec.	30 seconds (initial condition)
		60 sec.	60 seconds
		120 sec.	120 seconds
		180 sec.	180 seconds
Alarm	Enables/disables security alarm <Vehicles with security alarm>	Disable	Without function
		Enable	With function (initial condition)
Duration of pre-alarm	Adjustment of pre-alarm (interior alarm) continue time <Vehicles with security alarm (Without security alarm sensor)>	10 sec.	10 seconds (initial condition)
		6 sec.	6 seconds
Multi mode	Multi-mode keyless entry function customisation <Vehicles with electric retractable remote controlled door mirrors>	Disable	No function
		D/M: Open & Close	Door mirror fold/unfold operation only (initial condition)
KOS key detect out from window	With/without KOS key exterior detection function <Vehicles with KOS>	Enable	No function
		Disable	With function (initial condition)
KOS feature	KOS function adjustment <Vehicles with KOS>	Both enable	All KOS functions are enabled (initial condition).
		Door entry enable	Only door entry function is enabled.
		ENG start enable	Only engine starting function is enabled.
		Both disable	All KOS functions are disabled.
KOS unlock disable time	Adjusts the door unlock inhibition period after door lock is activated. <Vehicles with KOS>	0 sec.	0 second
		3 sec.	3 seconds (Initial condition)
		5 sec.	5 seconds
ACC power auto cut time	Time to ACC power cut-off when the ignition switch is in the ACC position	Disable	No function
		30 min	30 minutes (initial condition)
		60 min	60 minutes
Comfort flasher switch time	Switch operation time to activate the comfort flasher function	Normal	0.4 second (initial condition)
		Long	0.8 second

Adjustment item (M.U.T.-IIISE display)	Adjustment item	Adjusting content (M.U.T.-IIISE display)	Adjusting content
Intelligent/ Comfort washer	With/without Comfort washer function	Disable	No function
		Enable	With function
Coming home lamp	Disabling or enabling coming home light function	Disable	No function
		15 sec.	The headlamps illuminate for 15 seconds.
		30 sec.	The headlamps illuminate for 30 seconds. (initial condition)
		60 sec.	The headlamps illuminate for 60 seconds.
		180 sec.	The headlamps illuminate for 180 seconds.
Welcome lamp	Disabling or enabling welcome light function	Disable	No function
		Small lamp	The tail lamps illuminate. <initial condition>
		Headlamp	The headlamps illuminate.
Rear wiper (linked reverse gear)	Adjustment of automatic rear window wiper operation with reverse gear engaged	Enable(Rear wiper ON)	Operates only when the rear wiper switch is ON.
		Enable(Rear/Front wiper ON)	Operates only when the front or rear wiper switch is ON (initial condition).
Sensitivity for security sensor	Sensitivity level setting of security alarm sensor <Vehicles with security alarm (With security alarm sensor)>	Level 1	100% sensitivity of security alarm sensor (initial condition)
		Level 2	90% sensitivity of security alarm sensor
		Level 3	80% sensitivity of security alarm sensor
		Level 4	70% sensitivity of security alarm sensor
Outer buzzer volume	KOS outer buzzer volume adjustment <Vehicles with KOS>	Volume 1	Quieter than the standard
		Volume 2	Standard volume (Initial condition)
		Volume 3	Louder than the standard
A/C recirculation control	With/without inside/ outside air automatic control function	Disable	No function
		Enable	With function (Initial condition)
A/C switch control	With/without A/C automatic control function	Disable	No function
		Enable	With function (Initial condition)

Adjustment item (M.U.T.-IIISE display)	Adjustment item	Adjusting content (M.U.T.-IIISE display)	Adjusting content
A/C sensible temperature customize	Adjusting mean value for temperature setting	-2	Decreases the control temperature two degrees than the temperature displayed on the LCD.
		-1	Decreases the control temperature one degree than the temperature displayed on the LCD.
		0	No change (Initial condition)
		1	Increases the control temperature one degree than the temperature displayed on the LCD.
		2	Increases the control temperature two degrees than the temperature displayed on the LCD.
ECO mode	Function to activate ECO mode air-conditioner	ECO	Activates the ECO mode.
		Comfort	Deactivates the ECO mode.
FOOT / DEF air outlet ratio	Changes air distribution rate for DEF/FOOT vents during manual operation.	Normal	D/F2 (Initial condition)
		FOOT > DEF	D/F1(more to FOOT vent): More air flows through FOOT vents.
		FOOT < DEF	D/F3(more to DEF vent): More air flows through DEF vents.
FACE / FOOT air outlet ratio	Changes air distribution rate for FACE/FOOT vents during manual operation.	Normal	B/L2 (Initial condition)
		FACE > FOOT	B/L1(more to FACE vent): More air flows through FACE vents.
		FACE < FOOT	B/L3(more to FOOT vent): More air flows through FOOT vents.
Auto rear defogger (Engine start)	Activates the rear window defogger when the ambient temperature is low. (The rear window defogger has never been activated since the ignition switch was turned on last time)	Disable	No function (Initial condition)
		Enable	With function

4.1.6. Headlamp cleaning device (where mandatory)

M6131000600013

CONSTRUCTION DIAGRAM

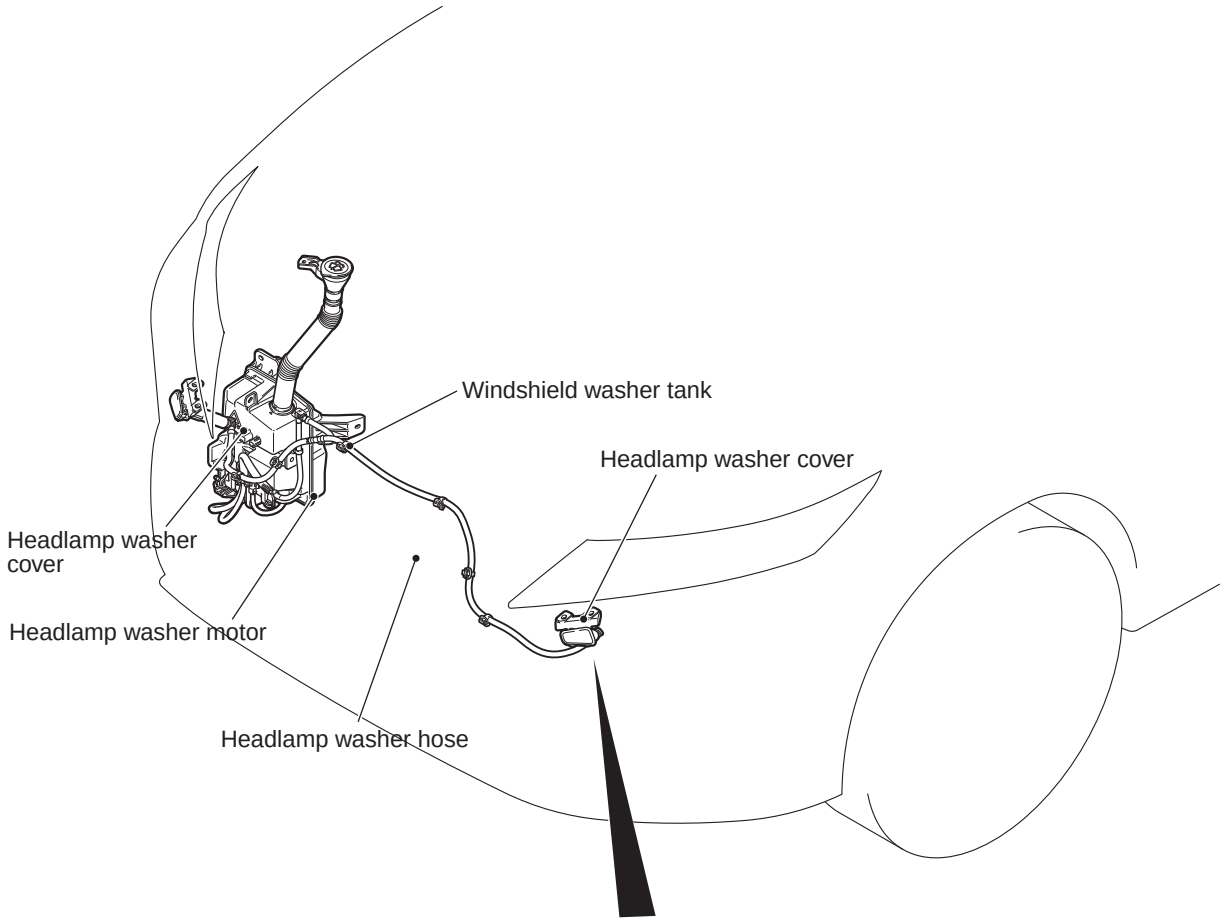

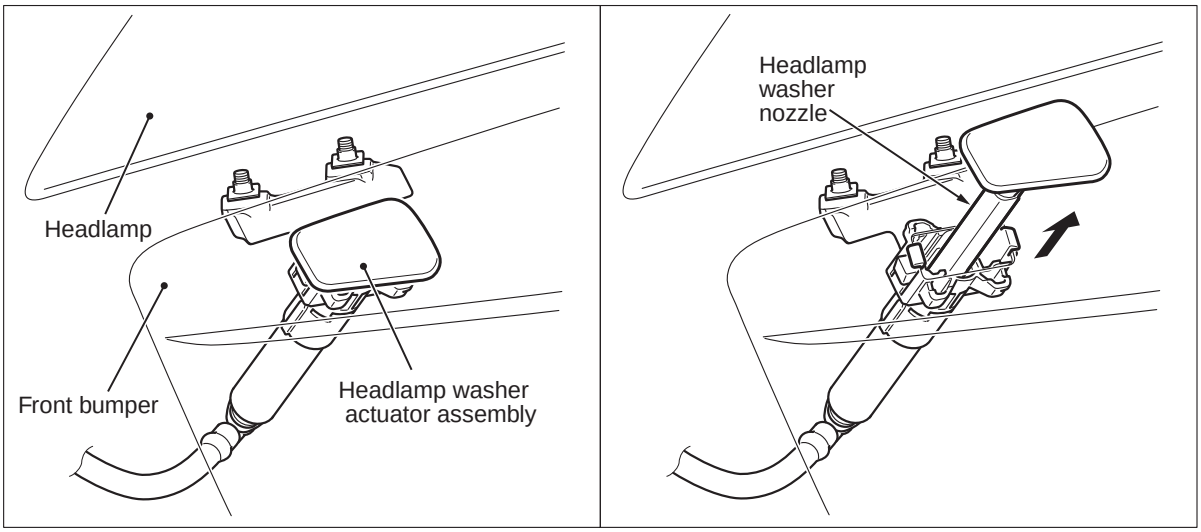

ACH03224AB

- The headlamp washer can be operated with the ignition switch at the ON or ACC position and the headlamp switch at the ON position. Push the headlamp washer button located at the end of the lighting lever once and the washer will be sprayed onto the headlamps.

- A headlamp washer mechanism that thrusts out and retracts nozzles, utilizing the water pressure produced by motors has been adopted as an option. This mechanism contributes to better appearances of vehicles when their washer nozzles are not in use.
- The headlamp washer tank used for this mechanism is also used for the windshield and rear window washers.

4.2. Front and rear position lamps, side marker lamps, end outline marker lamps and daytime running lamps

4.2.1. Condition and operation

M6132000100011

Construction diagram

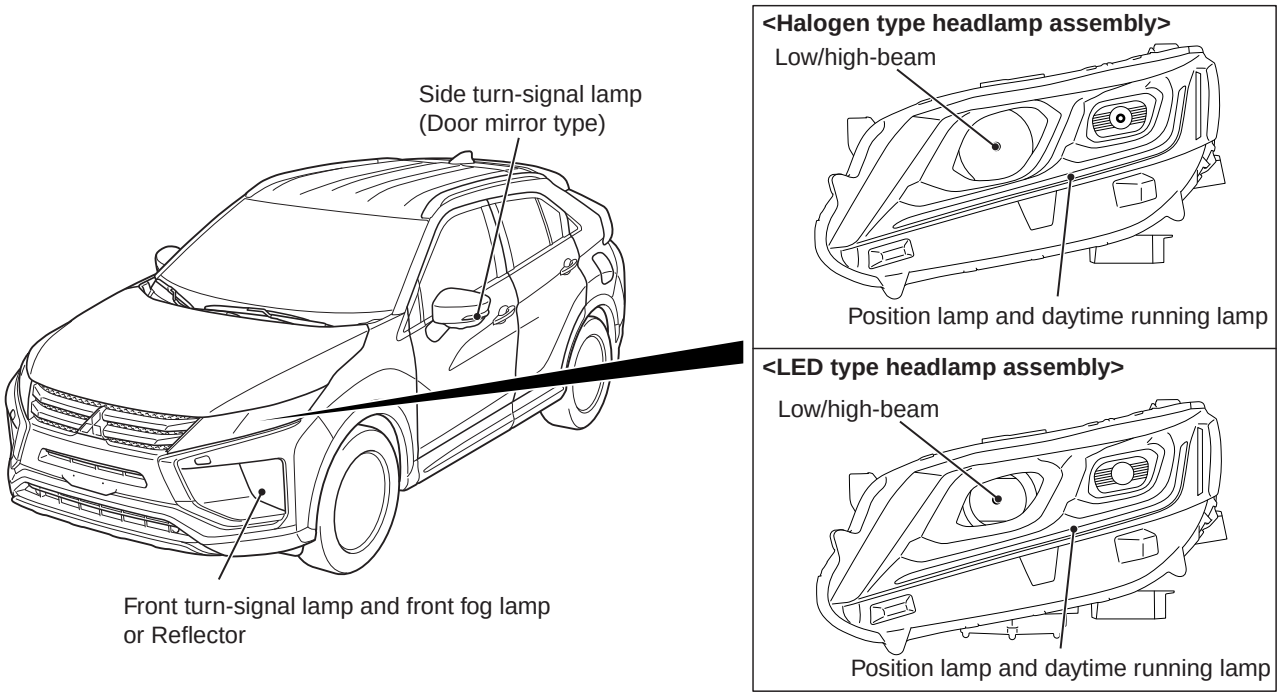

ACH03701AB

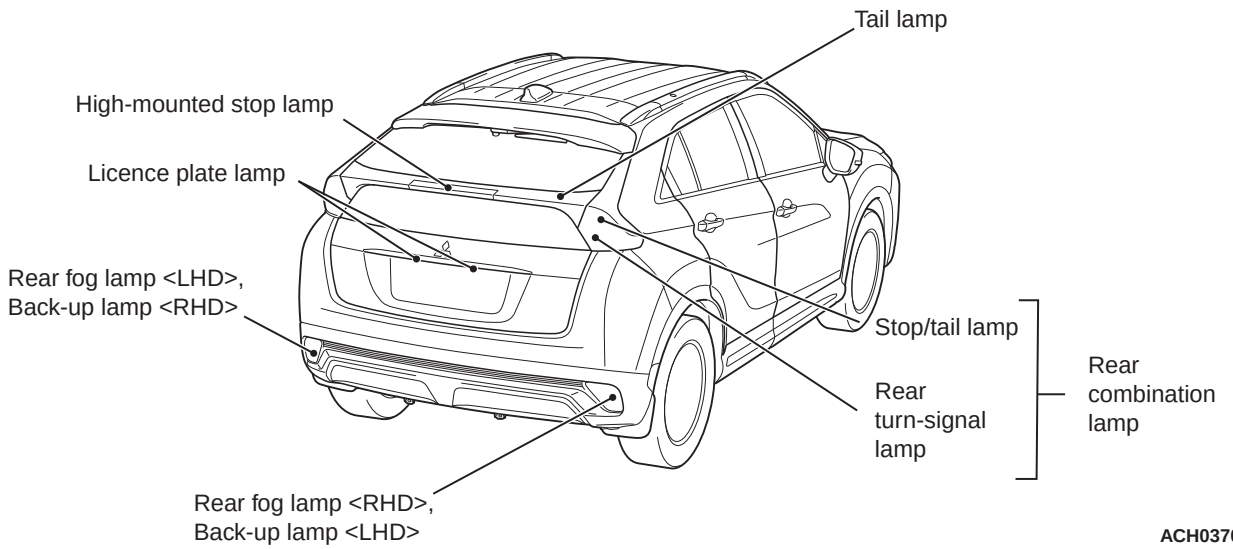

ACH03702 AB

- There are two types of headlamp assemblies: halogen type and LED type (optional).
- The headlamp assembly employs the two-lamp integrated with the headlamp (low/high-beam) and position lamp with daytime running lamp.
- For the low-beam of the headlamp, the headlamp manual levelling system <Vehicles with halogen type headlamp> (Refer to) and the headlamp automatic levelling system <Vehicles with LED type headlamp> (Refer to) have been adopted so that the height adjustment of the optical axis can be performed depending on the vehicle load status.
- The front fog lamp and front turn-signal lamp have been installed to the front bumper.
- The rear fog lamp and back-up lamp have been installed to the rear bumper.
- The side turn-signal lamp have been integrated into the door mirror.
- The rear combination lamp are integrated with the stop lamp, tail lamp and rear turn-signal lamp.
- The tail lamp and high-mounted stop lamp have been integrated into the tailgate.
- The licence plate lamp have been installed to above the licence plate.
- The lighting system is provided with headlamp automatic-shutdown function, auto lamp function, welcome light function and coming home light function (Refer to).
- For the flasher timer function of turn-signal lamp, the comfort flasher function has been adopted to improve the operability when changing the lane. When the turn-signal lamp switch (lighting switch) is operated for a short time, this function flashes the turn-signal lamp of the operated direction three times (Refer to).

Specifications

Item		
Headlamp assembly <Vehicles with halogen type headlamp>	Low/high-beam W	55 (HIR2)
	Position lamp with daytime running lamp	LED type
Headlamp assembly <Vehicles with LED type headlamp>	Low/high-beam	LED type
	Position lamp with daytime running lamp	LED type
Front turn-signal lamp with front fog lamp	Front turn-signal lamp W	21 (PY21W)
	Front fog lamp W	35 (H8)
Rear fog lamp W		21 (W21W)
Back-up lamp W		16 (W16W)
Side turn-signal lamp		LED type
Tail lamp		LED type
Rear combination lamp	Stop lamp	LED type
	Tail lamp	LED type
	Rear turn-signal lamp W	21 (PY21W)
High-mounted stop lamp		LED type
Licence plate lamp W		5 (W5W)

NOTE: The brackets ( ) show the bulb type.

Headlamp manual levelling system

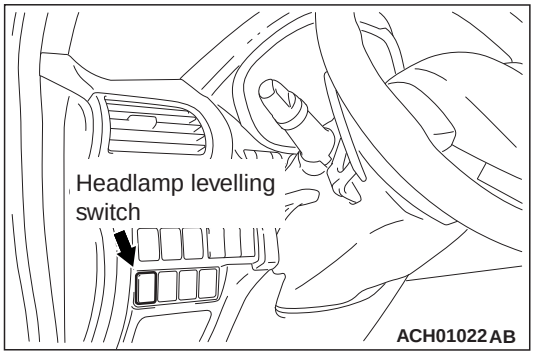

The beam direction of the headlamps changes according to the number of passengers and the amount of load. The headlamp manual levelling function is a system that allows the driver to change the direction of headlamp beam so that the drivers of oncoming cars are not dazzled by the headlamps. The headlamp levelling switch allows changing the direction in five steps: 0 to 4.

Relationship between the switch positions and the number of passengers/loads

Passenger and load	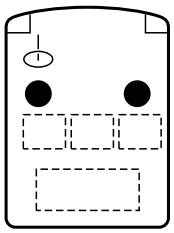 AC607611	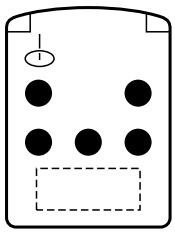 AC607612	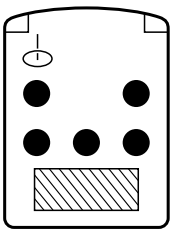 AC607613	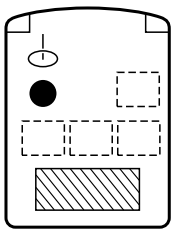 AC607614
	One or two passengers	Five passengers	Five passengers and heavy loads	Driver and heavy loads
Switch position	0	2	3	3 <4WD> or 4 <2WD>

NOTE: Each switch position is for reference. In each switch position, when the headlamp beam is too high, turn the switch to one-level higher position.

Operation

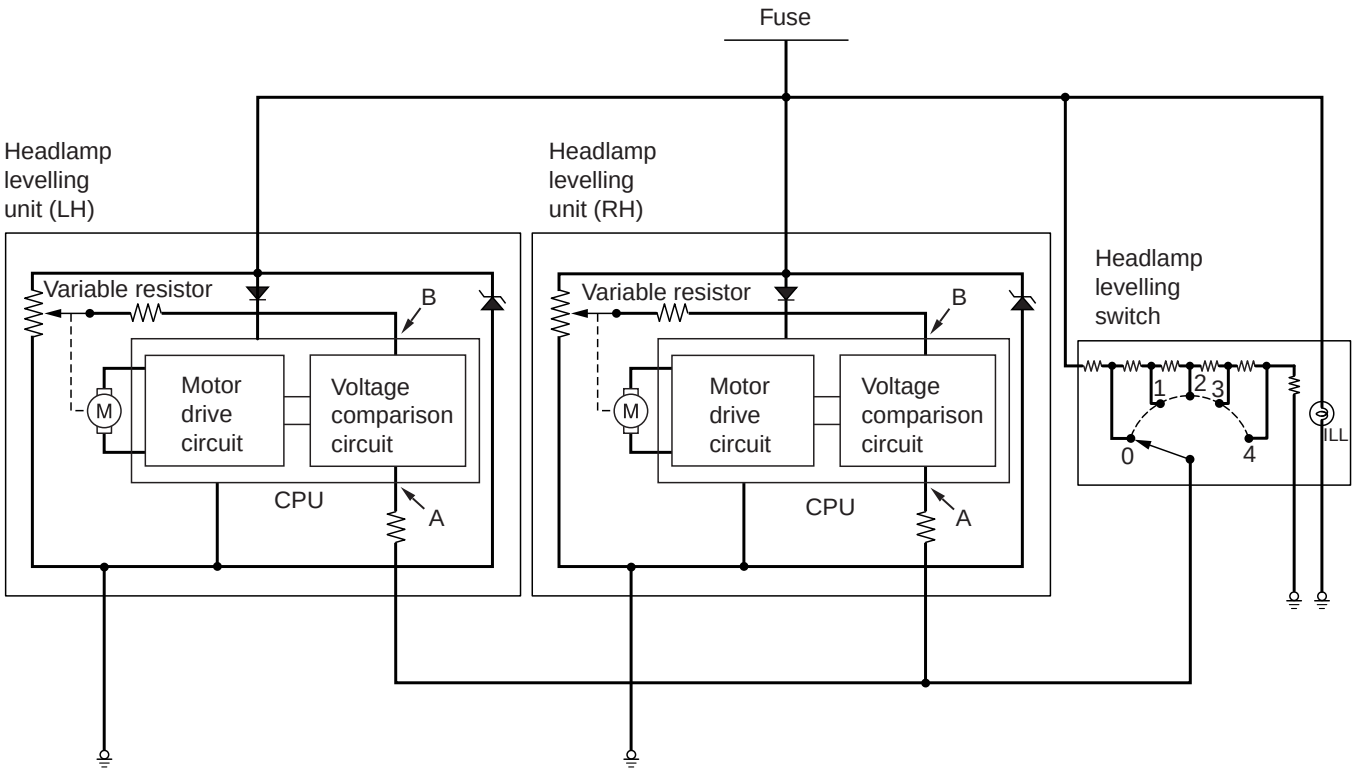

AC314086AB

1. The headlamp levelling switch increases the resistance as it is turned from 0 to 4. Turning the headlamp levelling switch changes the voltage at point A. When the headlamp levelling switch is turned from 0 to 4, the voltage at point A decreases. Upon detection of this voltage change, the headlamp levelling unit turns the motor to lower the beam direction. At this time, the resistance of the variable resistor in the headlamp assembly changes, and the voltage at point B decreases gradually. When the voltages at points A and B become equal, the headlamp levelling unit stops the motor.
2. Turning the headlamp levelling switch from 4 to 0 increases the voltage at point A, and then the headlamp levelling unit turns the motor in the direction opposite to that mentioned in Item 1, increasing the voltage at point B. When the voltages at points A and B become equal, the headlamp levelling unit stops the motor.
3. The headlamp levelling unit detects voltage changes caused by headlamp levelling switch operation, and turns the motor to change the directions of the headlamp reflectors for the adjustment of the headlamp beam direction.

Headlamp automatic levelling system

The beam direction of the headlamps (vertical angle) changes according to the number of passengers and the amount of load. The headlamp automatic levelling system is a system that automatically controls the beam direction of headlamps (up and down angle) when parking or travelling with stable vehicle attitude so that the drivers of oncoming cars and of cars driving in front are not dazzled by the headlamp beam that is directed upwards.

Operational Description

The beam direction of headlamps is automatically controlled according to driving conditions as described in the table below.

Vehicle condition	Control content
When parking	When the engine is stopped with the headlamp (low-beam) ON or when the vehicle is stopped with the headlamp (low-beam) ON and the accelerator pedal is released, the ETACS-ECU controls the beam direction according to the height sensor values of the change in load resulting from getting on/off of passengers or loading/unloading of loads.
When driving at a constant speed	When a vehicle starts on curb, the travelling vehicle posture changes from the posture during parking, so that the beam direction changes. To control the improper beam direction caused by such vehicle attitude change, the ETACS-ECU controls the beam direction while travelling with stable vehicle attitude. This beam direction control while travelling with stable vehicle attitude is performed only once between a vehicle stop and the next stop. When driving is started on a gravel or rough road, the beam direction control is activated after the vehicle attitude becomes stable on a paved road.

System component and function

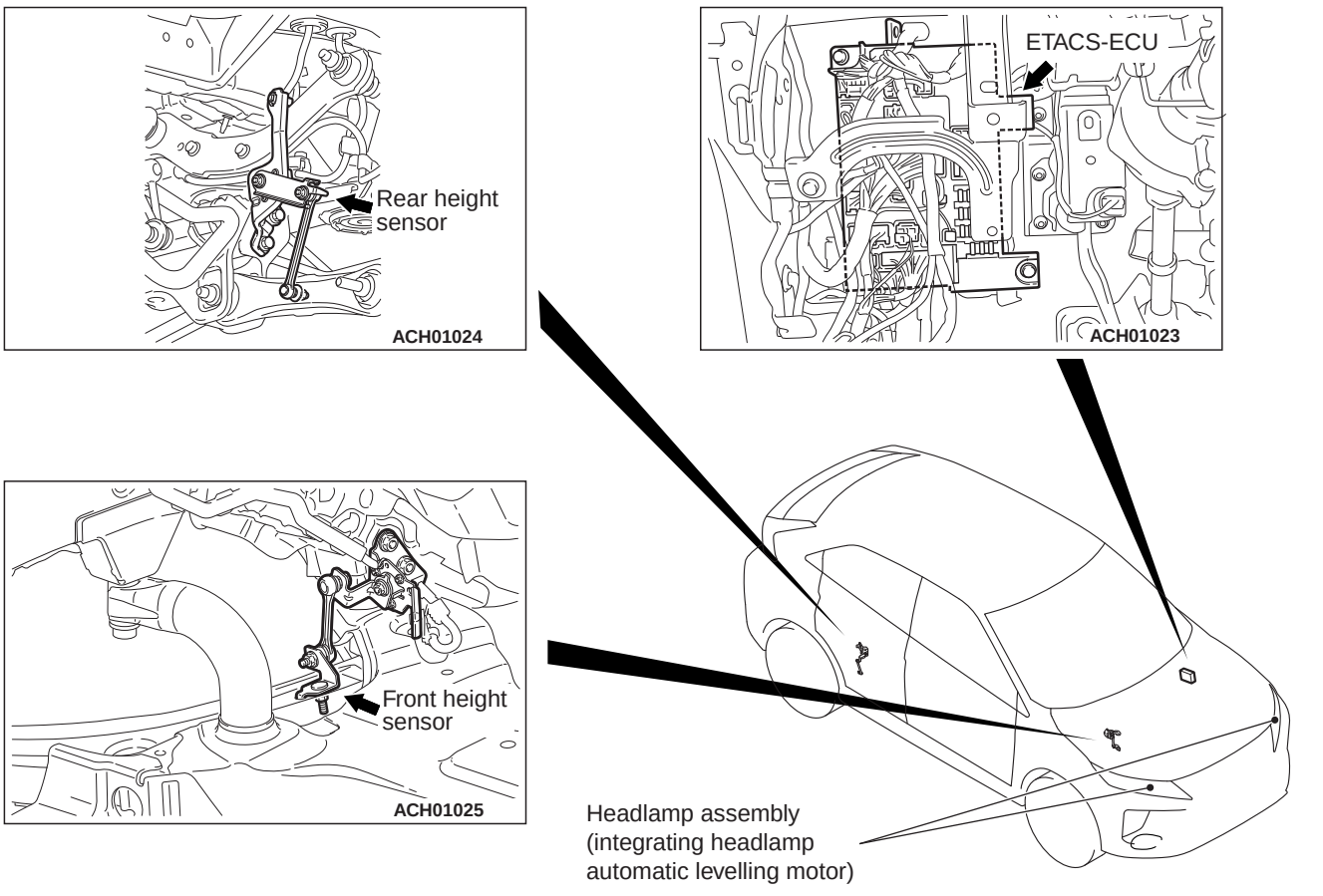

Parts name	Functional description
Ignition switch	Supplies power to the ETACS-ECU when the ignition switch is in the ON position.
Height sensor (front)	Detects the elongation/contraction of the front suspension and transmits the signal to the ETACS-ECU.

Parts name	Functional description
Height sensor (rear)	Detects the elongation/contraction of the rear suspension and transmits the signal to the ETACS-ECU.
Headlamp assembly (integrating headlamp automatic levelling motor)	Drives the headlamp reflector by receiving signals from the ETACS-ECU.
Combination meter	Send an odometer indication value to the ETACS-ECU.
ASC-ECU	Transfers the vehicle travel distance information to the ETACS-ECU.
Engine-ECU	Transfers engine speed signals and accelerator pedal position signals to the ETACS-ECU.
ETACS-ECU	• Transfers lighting switch position signals, all door switch ON/OFF signals, tailgate latch switch ON/OFF signals, hazard warning lamp switch ON/OFF signals, headlamp (low-beam) ON/OFF status signals. • Controls the headlamp automatic levelling motor integrated in the headlamp assembly based on the signals form switches and sensors to control the beam direction according to the vehicle posture.
Diagnosis connector	Outputs diagnosis codes.

System block diagram

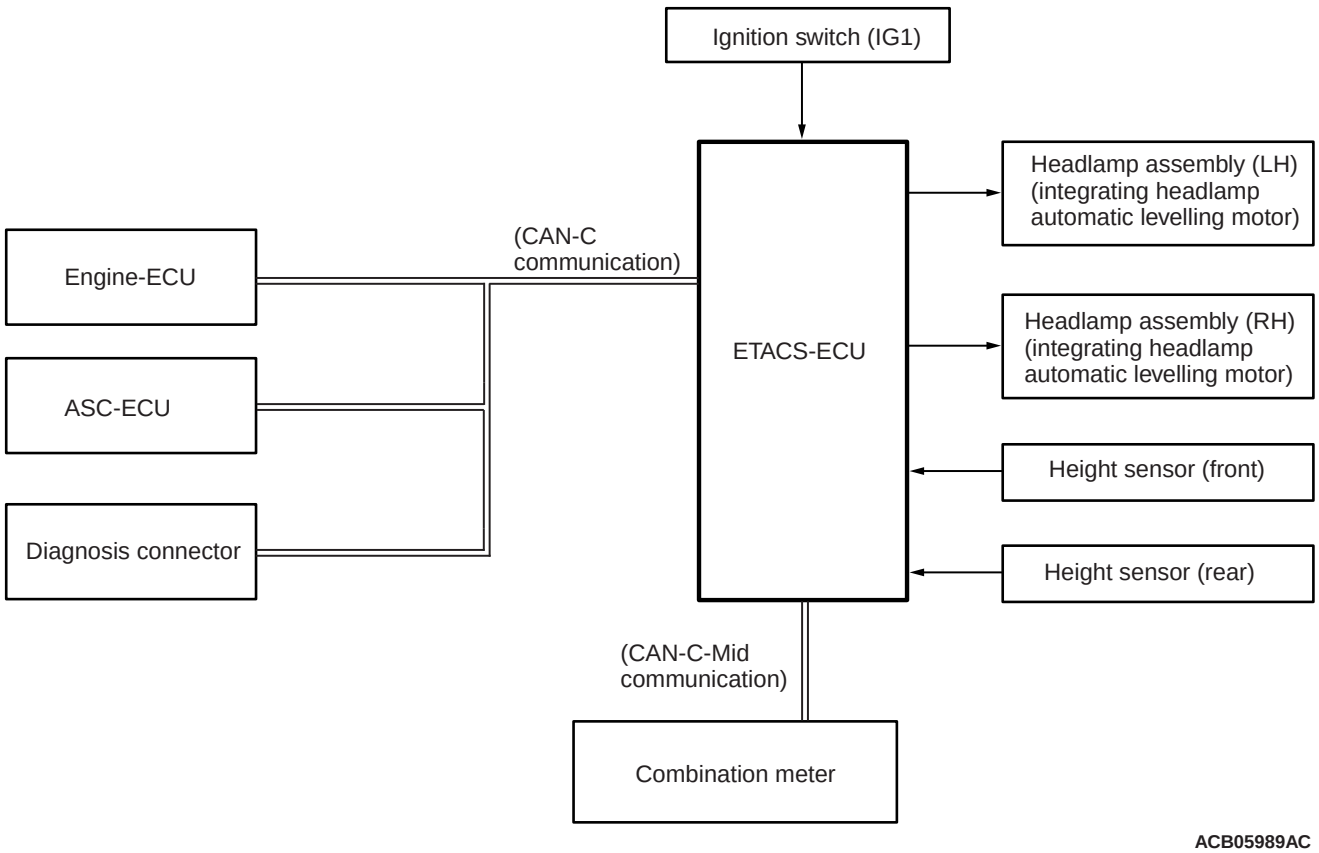

ETACS CUSTOMISATION

Using the ETACS system of M.U.T.-IIISE, the following functions can be programmed. The programmed information is held even when the battery is disconnected.

Adjustment item (M.U.T.-IIISE display)	Adjustment item	Adjusting content (M.U.T.-IIISE display)	Adjusting content
Turn power source	Adjustment of turn-signal lamp operation condition	ACC or IG1	Operable with ACC or ON position
		IG1	Operable with ON position (initial condition)
Comfort flasher	With/without comfort flasher function	Disable	No function
		Enable	With function (initial condition)
Hazard answer back	Adjustment of the number of keyless hazard warning lamp answer back flashes	Lock: 1, Unlock: 2	LOCK: Flashes once, UNLOCK: Flashes twice (initial condition)
		Lock: 1, Unlock: 0	LOCK: Flashes once, UNLOCK: No flash
		Lock: 0, Unlock: 2	LOCK: No flash, UNLOCK: Flash twice
		Lock: 2, Unlock: 1	LOCK: Flash twice, UNLOCK: Flash once
		Lock: 2, Unlock: 0	LOCK: Flash twice, UNLOCK: No flash
		Lock: 0, Unlock: 1	LOCK: No flash, UNLOCK: Flash once
		Lock: 0, Unlock: 0	No function
Front wiper operation	Adjustment of the intermittent windshield wiper operation	Normal INT	Intermittent wiper interval is fixed to 4 seconds.
		Variable INT	Intermittent wiper interval is calculated only by the wiper volume control.
		Speed Sensitive	Intermittent wiper interval is calculated according to the intermittent wiper volume control and vehicle speed.
		Rain Sensitive	Intermittent wiper interval is calculated according to the intermittent wiper volume control and lighting control sensor (initial condition).
Front/rear wiper washer	Disabling or enabling washer-linked wiper function	Only Washer	No function
		Washer & Wiper	With function: Without delayed finishing wipe function
		Washer & Wiper with after wiper	With function: With delayed finishing wipe function <Initial condition>
Intermittent time of rear wiper	Adjustment of rear wiper interval	0 sec.	No wiper interval
		4 sec.	4 seconds
		8 sec.	8 seconds (initial condition)
		16 sec.	16 seconds
Rear wiper low speed mode	Disabling or enabling rear wiper continuous operation	Disable	No function
		Enable	With function (initial condition)

Adjustment item (M.U.T.-IIISE display)	Adjustment item	Adjusting content (M.U.T.-IIISE display)	Adjusting content
Auto fold mirror	Electric folding door mirror automatic unfolding function <Vehicles with electric retractable remote controlled door mirrors>	Not Auto	No synchronised operation
		Open by vehicle speed	Vehicle speed-dependent operation
		Open/Close by IG	Ignition switch linked operation
		Open/Close by Keyless	Keyless entry linked operation (initial condition)
Sensitivity for auto lamp	Lighting control sensor sensitivity (illumination intensity)	Level 1 bright	High-high ambient brightness
		Level 2 bright	High ambient brightness
		Level 3	Standard ambient brightness (initial condition)
		Level 4 dark	Low ambient brightness
		Level 5 dark	Low-low ambient brightness
Room lamp delay timer with door	Adjustment of interior lamp delay shutdown time	0 sec.	0 second (no delay shutdown time)
		7.5 sec.	7.5 seconds
		15 sec.	15 seconds (initial condition)
		30 sec.	30 seconds
		60 sec.	60 seconds
		120 sec.	120 seconds
		180 sec.	180 seconds
Head lamp auto cut customize	Adjustment of headlamp automatic shutdown function	Disable	No function
		Enable (B-spec.)	With function (initial condition)
Interior lamp auto cut timer	Adjustment of interior lamp automatic shutdown function operation time	Disable	No function
		3 min	3 minutes
		30 min	30 minutes (initial condition)
		60 min	60 minutes
Auto door unlock	Adjustment of the auto door unlock function	Disable	Without function <M/T, CVT> (initial condition)
		Always(Shift P position)	With function: Operates when the shift lever or the selector lever is moved to the P position. <CVT>
		Always(IG lock position)	With function: Operates when the ignition switch is moved to the LOCK (OFF) position. <M/T, CVT>
Door unlock mode	Adjustment of power door locks with selective unlocking <Vehicles without dead lock system>	All Doors unlock	Without function: The first operation of keyless entry system or unlock operation by KOS unlocks all doors (initial condition).
		Driver's door unlock	With function: The first operation of keyless entry system or unlock operation by KOS unlocks the driver's door only, and the second unlock operation within 2 seconds after that unlocks all doors.

Adjustment item (M.U.T.-IIISE display)	Adjustment item	Adjusting content (M.U.T.-IIISE display)	Adjusting content
Deadlock button operation	Adjustment of the dead lock system setting procedure <Vehicles with dead lock system>	Twice	Operate the lock switch of the keyless entry system or KOS twice.(initial condition)
		Once	Operate the lock switch of the keyless entry system or KOS once.
Timer lock timer	Timer lock period adjustment	30 sec.	30 seconds (initial condition)
		60 sec.	60 seconds
		120 sec.	120 seconds
		180 sec.	180 seconds
Alarm	Enables/disables security alarm <Vehicles with security alarm>	Disable	Without function
		Enable	With function (initial condition)
Duration of pre-alarm	Adjustment of pre-alarm (interior alarm) continue time <Vehicles with security alarm (Without security alarm sensor)>	10 sec.	10 seconds (initial condition)
		6 sec.	6 seconds
Multi mode	Multi-mode keyless entry function customisation <Vehicles with electric retractable remote controlled door mirrors>	Disable	No function
		D/M: Open & Close	Door mirror fold/unfold operation only (initial condition)
KOS key detect out from window	With/without KOS key exterior detection function <Vehicles with KOS>	Enable	No function
		Disable	With function (initial condition)
KOS feature	KOS function adjustment <Vehicles with KOS>	Both enable	All KOS functions are enabled (initial condition).
		Door entry enable	Only door entry function is enabled.
		ENG start enable	Only engine starting function is enabled.
		Both disable	All KOS functions are disabled.
KOS unlock disable time	Adjusts the door unlock inhibition period after door lock is activated. <Vehicles with KOS>	0 sec.	0 second
		3 sec.	3 seconds (Initial condition)
		5 sec.	5 seconds

Adjustment item (M.U.T.-IIISE display)	Adjustment item	Adjusting content (M.U.T.-IIISE display)	Adjusting content
ACC power auto cut time	Time to ACC power cut-off when the ignition switch is in the ACC position	Disable	No function
		30 min	30 minutes (initial condition)
		60 min	60 minutes
Comfort flasher switch time	Switch operation time to activate the comfort flasher function	Normal	0.4 second (initial condition)
		Long	0.8 second
Intelligent/ Comfort washer	With/without Comfort washer function	Disable	No function
		Enable	With function
Coming home lamp	Disabling or enabling coming home light function	Disable	No function
		15 sec.	The headlamps illuminate for 15 seconds.
		30 sec.	The headlamps illuminate for 30 seconds. (initial condition)
		60 sec.	The headlamps illuminate for 60 seconds.
		180 sec.	The headlamps illuminate for 180 seconds.
Welcome lamp	Disabling or enabling welcome light function	Disable	No function
		Small lamp	The tail lamps illuminate. <initial condition>
		Headlamp	The headlamps illuminate.
Rear wiper (linked reverse gear)	Adjustment of automatic rear window wiper operation with reverse gear engaged	Enable(Rear wiper ON)	Operates only when the rear wiper switch is ON.
		Enable(Rear/Front wiper ON)	Operates only when the front or rear wiper switch is ON (initial condition).
Sensitivity for security sensor	Sensitivity level setting of security alarm sensor <Vehicles with security alarm (With security alarm sensor)>	Level 1	100% sensitivity of security alarm sensor (initial condition)
		Level 2	90% sensitivity of security alarm sensor
		Level 3	80% sensitivity of security alarm sensor
		Level 4	70% sensitivity of security alarm sensor
Outer buzzer volume	KOS outer buzzer volume adjustment <Vehicles with KOS>	Volume 1	Quieter than the standard
		Volume 2	Standard volume (Initial condition)
		Volume 3	Louder than the standard
A/C recirculation control	With/without inside/ outside air automatic control function	Disable	No function
		Enable	With function (Initial condition)
A/C switch control	With/without A/C automatic control function	Disable	No function
		Enable	With function (Initial condition)

Adjustment item (M.U.T.-IIISE display)	Adjustment item	Adjusting content (M.U.T.-IIISE display)	Adjusting content
A/C sensible temperature customize	Adjusting mean value for temperature setting	-2	Decreases the control temperature two degrees than the temperature displayed on the LCD.
		-1	Decreases the control temperature one degree than the temperature displayed on the LCD.
		0	No change (Initial condition)
		1	Increases the control temperature one degree than the temperature displayed on the LCD.
		2	Increases the control temperature two degrees than the temperature displayed on the LCD.
ECO mode	Function to activate ECO mode air-conditioner	ECO	Activates the ECO mode.
		Comfort	Deactivates the ECO mode.
FOOT / DEF air outlet ratio	Changes air distribution rate for DEF/FOOT vents during manual operation.	Normal	D/F2 (Initial condition)
		FOOT > DEF	D/F1(more to FOOT vent): More air flows through FOOT vents.
		FOOT < DEF	D/F3(more to DEF vent): More air flows through DEF vents.
FACE / FOOT air outlet ratio	Changes air distribution rate for FACE/FOOT vents during manual operation.	Normal	B/L2 (Initial condition)
		FACE > FOOT	B/L1(more to FACE vent): More air flows through FACE vents.
		FACE < FOOT	B/L3(more to FOOT vent): More air flows through FOOT vents.
Auto rear defogger (Engine start)	Activates the rear window defogger when the ambient temperature is low. (The rear window defogger has never been activated since the ignition switch was turned on last time)	Disable	No function (Initial condition)
		Enable	With function

4.2.2. Switching

M6132000200018

"Not Applicable"

4.2.3. Compliance with requirements1

M6132000300015

"Not Applicable"

4.3. Stop Lamps

4.3.1. Condition and operation

M6133000100014

"Not Applicable"

4.3.2. Switching

M6133000200011

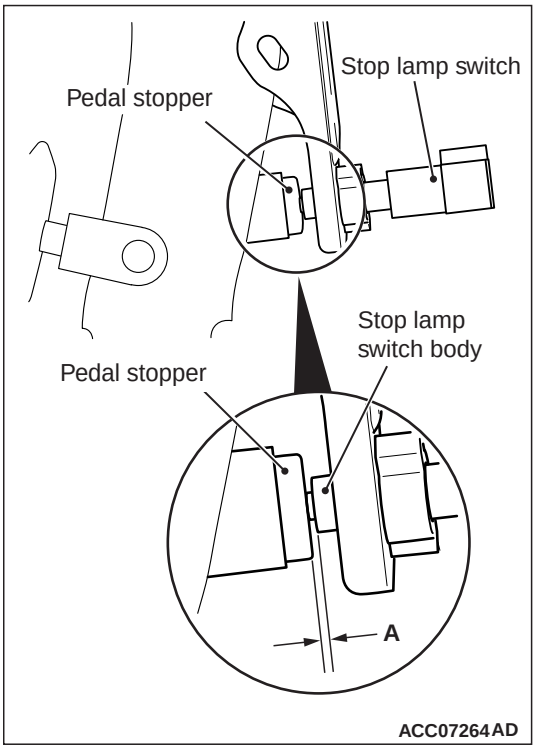

1. Check that the clearance between the stop lamp switch and the pedal stopper is within the standard value.
   Standard value (A): 0.5 – 1.5 mm

⚠ CAUTION
Make sure that the stop lamp is not illuminated when the brake pedal is not depressed.

STOP LAMP SWITCH CHECK

⚠ CAUTION
Do not apply lubricant (grease or silicon system sprayer etc.) to the switch and the switch installation section to avoid malfunction of the switch. In addition, do not use gloves which have lubricant (grease or silicon system sprayer etc.) on them.

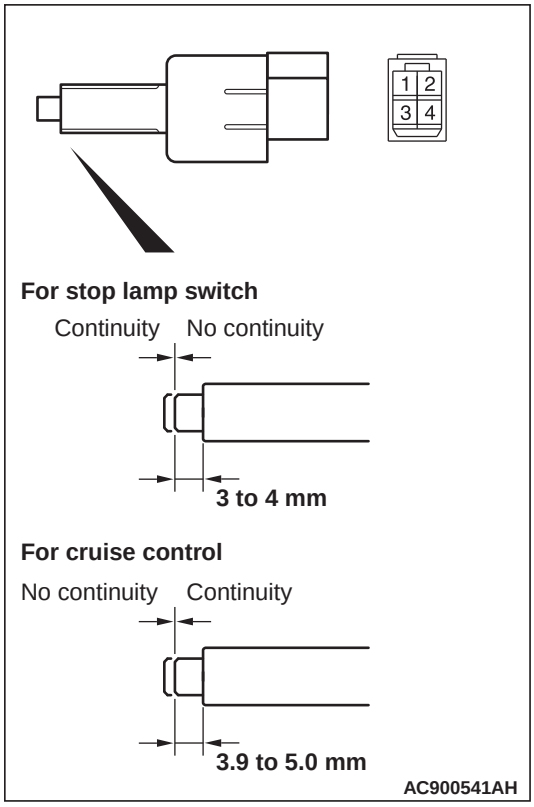

Check for continuity between the terminals of the switch.

Check condition	Terminal connector of tester	Normal condition
At free position	1 – 2 (for stop lamp switch)	Continuity exists (2 Ω or less)
	3 – 4 (for cruise control)	No continuity
Press the plunger from the edge of the outer case by the dimension shown in the figure.	1 – 2 (for stop lamp switch)	No continuity
	3 – 4 (for cruise control)	Continuity exists (2 Ω or less)

FORWARD COLLISION MITIGATION (FCM)

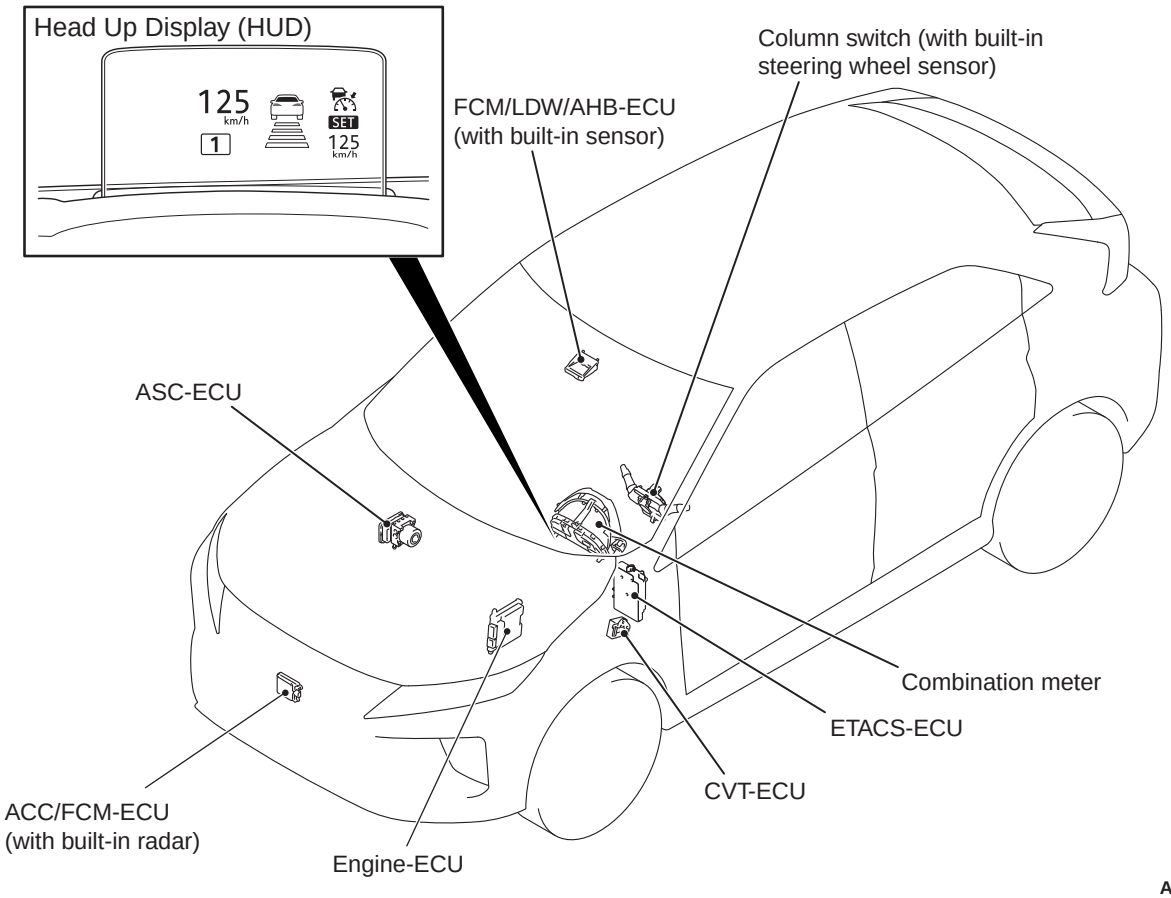

ACH03652AB

Main components and functions

Component name	Functional Description
FCM/LDW/AHB-ECU (with built-in sensor)	• Uses a built-in sensor to recognise a vehicle travelling ahead, a pedestrian, a lane and the headlamp beams which a travelling-ahead or oncoming vehicle casts. • Controls the Forward Collision Mitigation (FCM), the Lane Departure Warning System (LDW) and the automatic high beam system according to the sensor detection and CAN bus communication. • Switches ON/OFF of FCM function and FCM alarm timing setting based on a forward collision mitigation system (FCM) and ultrasonic misacceleration mitigation system ON/OFF switch signal received from ASC-ECU via CAN communication. • It requests the combination meter to provide status information on the functions and visual warnings via CAN communication. It also requests the ASC-ECU to control the brakes via CAN communication. • Adjusts the axis of the built-in sensor, and detects any blockage or malfunction.
ACC/FCM-ECU (with built-in radar) <Vehicles with ACC>	• Switches ON/OFF of FCM function and FCM alarm timing setting based on each FCM status received from FCM/LDW/AHB-ECU via CAN communication. • Controls the FCM function according to the radar detection and CAN bus communication. • It requests the combination meter to provide status information on the functions and visual warnings via CAN communication. It also requests the ASC-ECU to control the brakes via CAN communication. • Adjusts the axis of the built-in radar, and detects any blockage or malfunction.
ASC-ECU	• Controls the brakes according to request signals received from the FCM/LDW/AHB-ECU or ACC/FCM-ECU via CAN communication. • Activates the stop lamps when the automatic braking is triggered. • Requests the engine-ECU to provide "engine braking" effect according to the request from the FCM/LDW/AHB-ECU or ACC/FCM-ECU. • Sends the signals of the forward collision mitigation system (FCM) and ultrasonic misacceleration mitigation system ON/OFF switch to the ECUs via CAN communication.
Engine-ECU	• Sends accelerator pedal position sensor signals to the ECUs via CAN communication. • Controls the engine torque according to request signals received from the ASC-ECU.
CVT-ECU	Informs the ECUs of the selector lever position via CAN communication.
Combination meter	• The FCM/LDW/AHB-ECU or ACC/FCM-ECU informs the combination meter of status information and requests it to provide visual warnings. Based on these, the combination meter controls the multi-information display, the indicator lamps, the warning lamps and the buzzer. • Requests warning indication on Head Up Display (HUD) by using CAN communication. <Vehicles with Head Up Display (HUD)>

Component name	Functional Description
ETACS-ECU	• Incorporates the circuit where the ASC-ECU activates the stop lamps when the FCM activates the automatic braking. • Sends LDW switch signals to the ECUs via CAN communication. • Switches high and low beam headlamps according to request signals received from the FCM/LDW/AHB-ECU. • Informs the ECUs of ambient temperature via CAN communication. • Sends stop lamp switch signals to the ECUs via CAN communication.
Column switch (with built-in steering wheel sensor)	Informs the ECUs of a steering wheel angle and angular velocity via CAN communication.
Head Up Display (HUD) <Vehicles with Head Up Display (HUD)>	Displays an alarm based on the alarm indication request received from the combination meter via CAN communication.

SCHEMATIC DIAGRAM

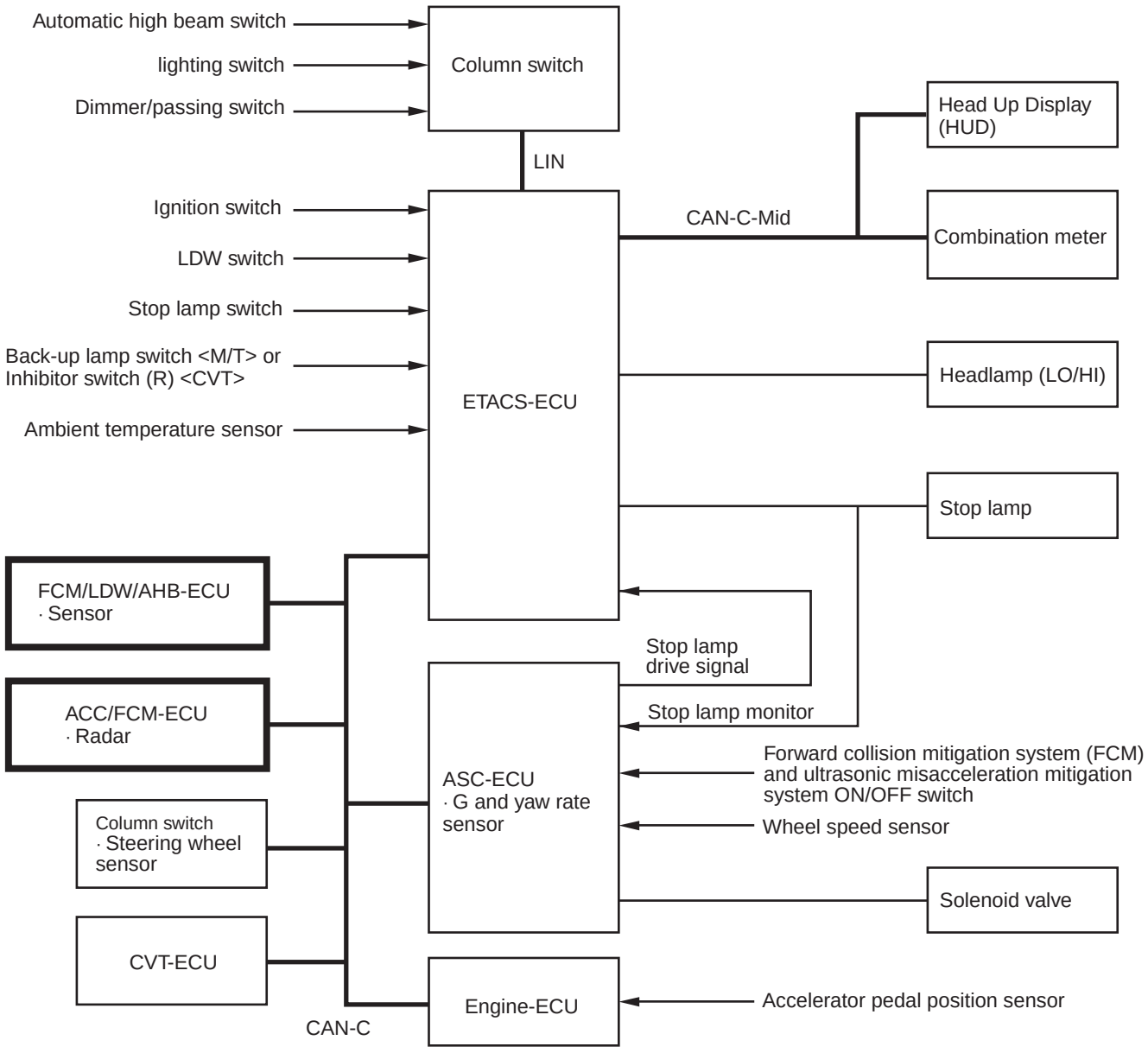

ACH02951AB

Fail-safe and self-diagnosis functions
The FCM/LDW/AHB-ECU or ACC/FCM-ECU constantly monitors the input and output signals. If the system detects a malfunction, it will send a failure signal to the combination meter and prohibit the FCM/LDW/automatic high beam system control under circumstances. The combination meter will provide a visual and audible warning to inform the driver of it. The FCM/LDW/AHB-ECU or ACC/FCM-ECU has the following functions for easier system checks.

- Diagnosis code set
- Service data output
- Freeze frame data output

All the above items can be diagnosed using M.U.T.-IIISE.

Sensor calibration
If the FCM/LDW/AHB-ECU or ACC/FCM-ECU is replaced or removed and installed, calibration the sensor or radar by using the M.U.T.-IIISE.

NOTE: For how to calibration the sensor, refer to the WORKSHOP MANUAL.

The forward collision damage mitigation braking system (FCM) measures the relative speed and the relative distance with the vehicle or the pedestrian in front of the vehicle with a sensor or radar. When judging that there is a danger of collision, it activates an alarm or the automatic brake etc. to reduce collision damage or avoid collision.

FUNCTION

The FCM has the following functions:

Function	General
Forward collision warning function	Alarms the driver with the alarm indication and alarm sound. *NOTE:* • *The alarm indication is displayed on the combination meter and the Head Up Display (HUD) <Vehicles with Head Up Display (HUD)>.* • *A buzzer of the combination meter sounds an alarm.*
FCM brake prefill function	Increases the brake fluid pressure in advance to enhance the response during the driver's braking operation.
FCM brake assist function	When the driver quickly steps on the brake pedal, the brake assist is operated at earlier timing than usual.
FCM braking function	Operates the automatic brake in the following two stages. 1. Decelerates with weak automatic braking and urges the driver to avoid collision. 2. When a collision cannot be avoided, strong automatic braking reduces damage at the time of the collision or avoids collision.

SPECIFICATION

FCM operates by control only with FCM/LDW/AHB-ECU (Type 1) or by control with two ECUs of FCM/LDW/AHB-ECU and ACC/FCM-ECU (Type 2).

		Type 1	Type 2
Sensor		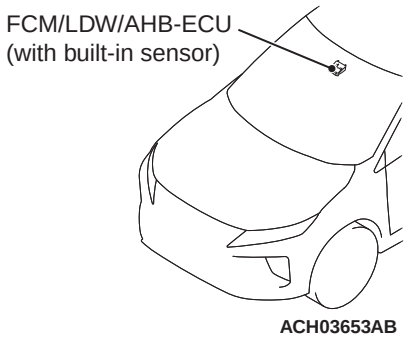 ACH03653AB	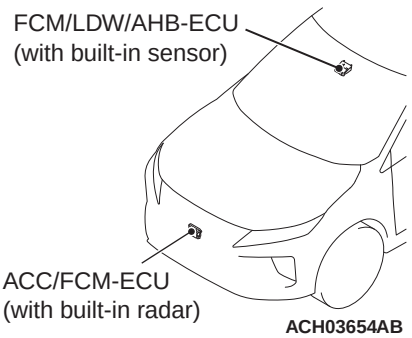 ACH03654AB
Target to be controlled		Vehicles and pedestrians	
Vehicle speed at which forward collision warning function operates (km/h)	Against a vehicle	Approx. 15 - 140	Approx. 15 - 180
	Against a pedestrian	Approx. 7 - 65	
Vehicle speed at which FCM brake prefill function operates (km/h)	Against a vehicle	Approx. 5 - 80	Approx. 5 - 180
	Against a pedestrian	Approx. 5 - 65	
Vehicle speed at which FCM brake assist function operates (km/h)	Against a vehicle	Approx. 15 - 80	Approx. 15 - 180
	Against a pedestrian	Approx. 15 - 65	
Vehicle speed at which FCM braking function operates (km/h)	Against a moving vehicle	Approx. 5 - 80	Approx. 5 - 180
	Against a stationary vehicle	Approx. 5 - 80	
	Against a pedestrian	Approx. 5 - 65	
Relative speed (against a vehicle) with a possibility of collision avoidance (km/h)		Less than about 40	

OPERATION

Case	Operation		
	Alarm indication	Alarm sound	Function
When there is no danger of collision 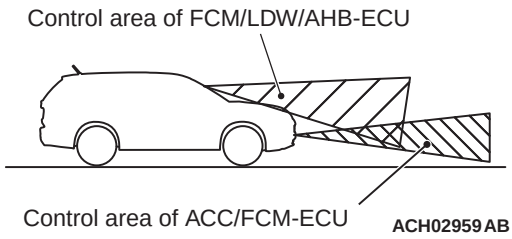 ACH02959AB	No alarm indication	No buzzer sound	–
When there is a danger of collision 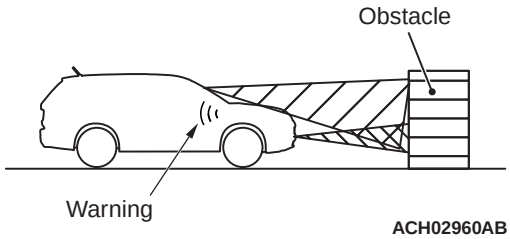 ACH02960AB	BRAKE! ACH02956	Sound a buzzer	• Forward collision warning function operates. • FCM brake prefill function operates. • FCM brake assist function operates.
When the risk of collision is high or collision cannot be avoided 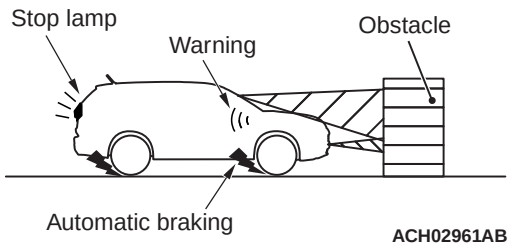 ACH02961AB	BRAKE! ACH02956	Sound a buzzer	FCM braking function operates.*

*NOTE: *: If two seconds elapse after the forward collision mitigation brake stops the vehicle, it can be deactivated automatically.*

FORWARD COLLISION MITIGATION SYSTEM (FCM) AND ULTRASONIC MISACCELERATION MITIGATION SYSTEM ON/OFF SWITCH

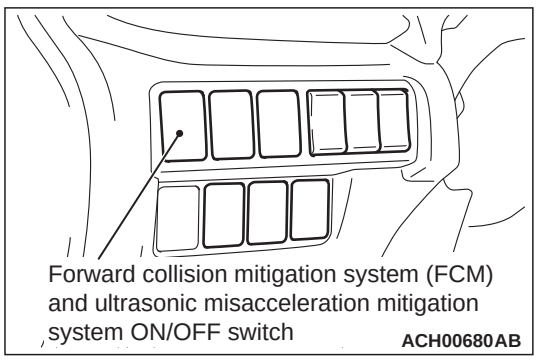

Forward collision mitigation system (FCM) and ultrasonic misacceleration mitigation system ON/OFF switch

ACH00680AB

The forward collision mitigation system (FCM) and ultrasonic misacceleration mitigation system ON/OFF switch is installed at the instrument panel left lower side. You can switch the FCM (on and off) and the forward collision warning function timing ("FAR", "MIDDLE" and "NEAR") by operating this switch.

How to switch on and off the FCM

- The FCM is toggled between on and off when the forward collision mitigation system (FCM) and ultrasonic misacceleration mitigation system ON/OFF switch is pressed and held. When the FCM is toggled, the system will inform the driver of it by the indicator of combination meter*.

NOTE:

- **: If the FCM is toggled off, "FCM OFF indicator" will be illuminate on the combination meter. If the FCM is toggled on, a current forward collision warning function timing will be shown on the combination meter LCD screen.*
- *Because the forward collision mitigation system (FCM) and ultrasonic misacceleration mitigation system ON/OFF switch is shared with the ultrasonic misacceleration mitigation system, the FCM and ultrasonic misacceleration mitigation system are switched ON/OFF in an interlocked manner.*

How to switch the forward collision warning function timing

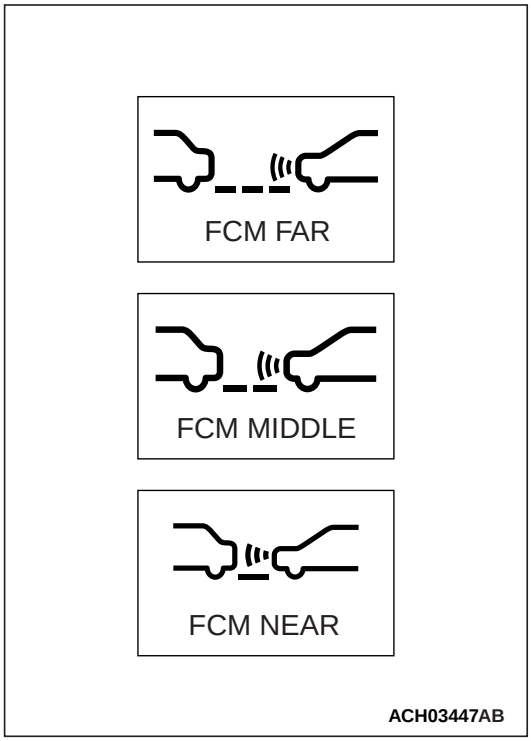

The forward collision warning function timing is toggled when the forward collision mitigation system (FCM) and ultrasonic misacceleration mitigation system ON/OFF switch is pressed briefly with the FCM activated. When the FCM is toggled, the system will inform the driver of it by the combination meter LCD display.

NOTE: The timing of forward collision mitigation brake does not change.

4.3.3. Compliance with requirements1.

M6133000300018

"Not Applicable"

4.4. Direction indicator and hazard warning lamps

4.4.1. Condition and operation

M6134000100017

"Not Applicable"

4.4.2. Switching

M6134000200014

"Not Applicable"

4.4.3. Compliance with requirements1.

M6134000300011

"Not Applicable"

4.4.4. Flashing frequency

M6134000400018

"Not Applicable"

4.5. Front and rear fog lamps

4.5.1. Condition and operation

M6135000100010

"Not Applicable"

4.5.2. Alignment (X)2

M6135000200017

"Not Applicable"

4.5.3. Switching

M6135000300014

"Not Applicable"

4.5.4. Compliance with requirements1.

M6135000400011

"Not Applicable"

4.6. Reversing lamps

4.6.1. Condition and operation

M6136000100013

"Not Applicable"

4.6.2. Compliance with requirements1

M6136000200010

"Not Applicable"

4.6.3. Switching

M6136000300017

"Not Applicable"

4.7. Rear registration plate lamp

4.7.1. Condition and operation

M6137000100016

"Not Applicable"

4.7.2. Compliance with requirements1

M6137000200013

"Not Applicable"

4.8. Retro-reflectors, conspicuity (retro reflecting) markings and rear marking plates

4.8.1. Condition

M6138000100019

"Not Applicable"

4.8.2. Compliance with requirements1

M6138000200016

"Not Applicable"

4.9. Tell-tales mandatory for lighting equipment

4.9.1. Condition and operation

M6139000100012

"Not Applicable"

4.9.2. Compliance with requirements1

M6139000200019

"Not Applicable"

4.10. Electrical connections between towing vehicle and trailer or semi-trailer

M6130100000015

"Not Applicable"

4.11.Electrical wiring

M6131100000018

“Query raised for this content”

4.12. Non obligatory lamps and retro-reflectors (X)2

M6131200000015

Construction diagram

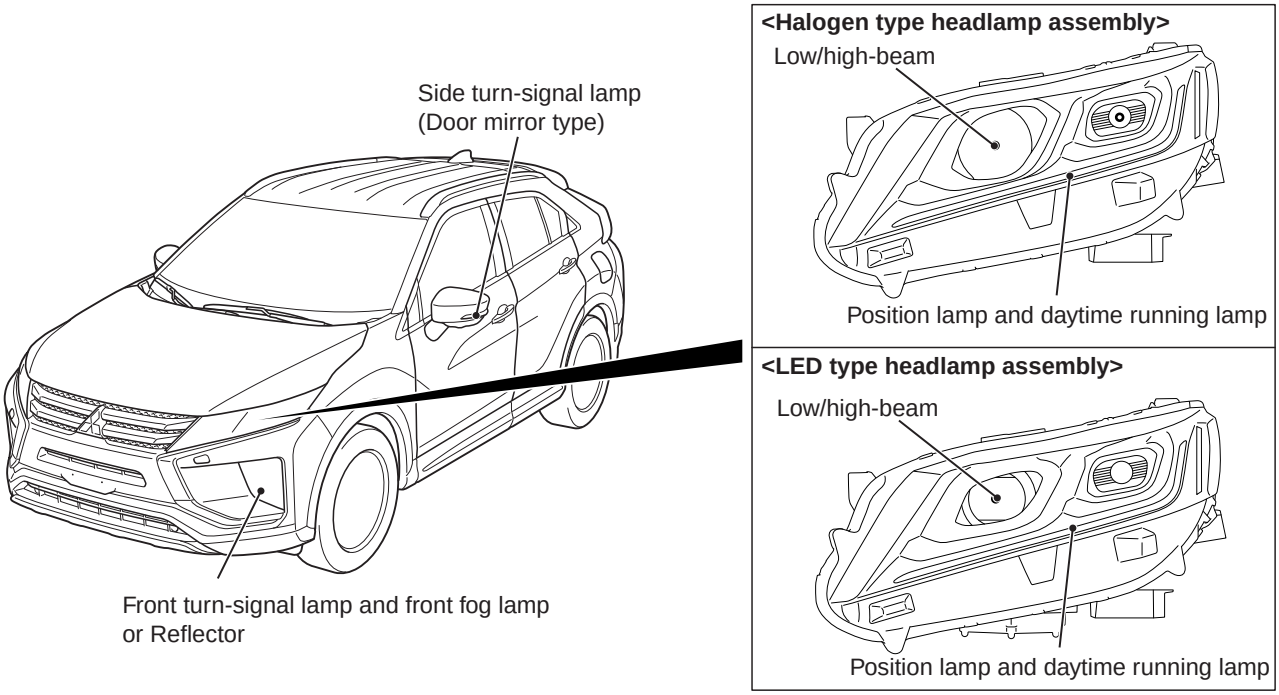

ACH03701AB

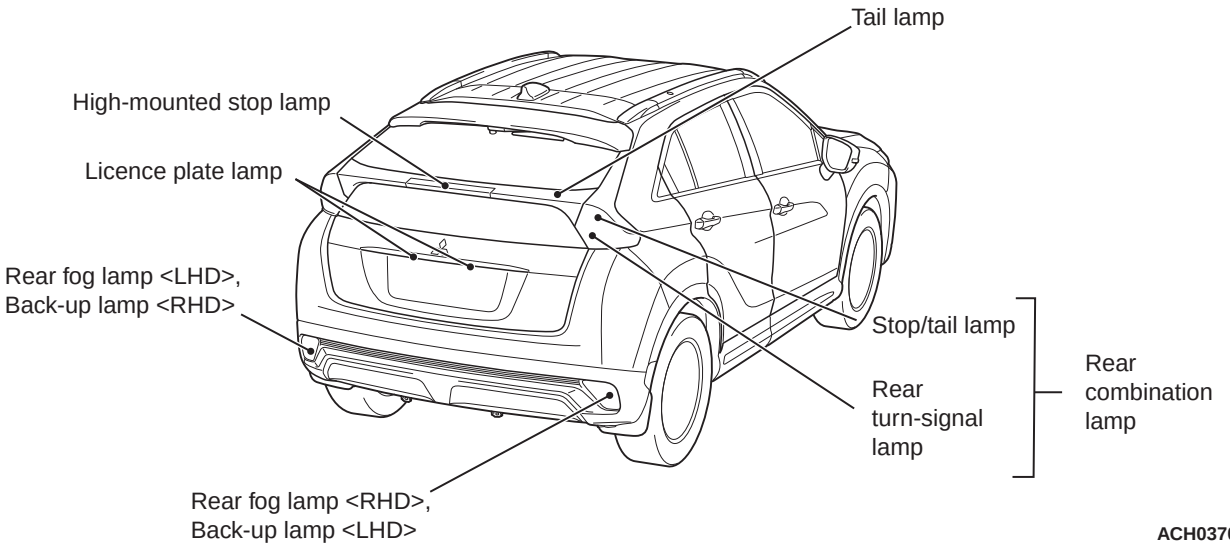

ACH03702 AB

- There are two types of headlamp assemblies: halogen type and LED type (optional).
- The headlamp assembly employs the two-lamp integrated with the headlamp (low/high-beam) and position lamp with daytime running lamp.
- For the low-beam of the headlamp, the headlamp manual levelling system <Vehicles with halogen type headlamp> (Refer to) and the headlamp automatic levelling system <Vehicles with LED type headlamp> (Refer to) have been adopted so that the height adjustment of the optical axis can be performed depending on the vehicle load status.
- The front fog lamp and front turn-signal lamp have been installed to the front bumper.

- The rear fog lamp and back-up lamp have been installed to the rear bumper.
- The side turn-signal lamp have been integrated into the door mirror.
- The rear combination lamp are integrated with the stop lamp, tail lamp and rear turn-signal lamp.
- The tail lamp and high-mounted stop lamp have been integrated into the tailgate.
- The licence plate lamp have been installed to above the licence plate.
- The lighting system is provided with headlamp automatic-shutdown function, auto lamp function, welcome light function and coming home light function (Refer to).
- For the flasher timer function of turn-signal lamp, the comfort flasher function has been adopted to improve the operability when changing the lane. When the turn-signal lamp switch (lighting switch) is operated for a short time, this function flashes the turn-signal lamp of the operated direction three times (Refer to).

Specifications

Item		
Headlamp assembly <Vehicles with halogen type headlamp>	Low/high-beam W	55 (HIR2)
	Position lamp with daytime running lamp	LED type
Headlamp assembly <Vehicles with LED type headlamp>	Low/high-beam	LED type
	Position lamp with daytime running lamp	LED type
Front turn-signal lamp with front fog lamp	Front turn-signal lamp W	21 (PY21W)
	Front fog lamp W	35 (H8)
Rear fog lamp W		21 (W21W)
Back-up lamp W		16 (W16W)
Side turn-signal lamp		LED type
Tail lamp		LED type
Rear combination lamp	Stop lamp	LED type
	Tail lamp	LED type
	Rear turn-signal lamp W	21 (PY21W)
High-mounted stop lamp		LED type
Licence plate lamp W		5 (W5W)

NOTE: The brackets ( ) show the bulb type.

Headlamp manual levelling system

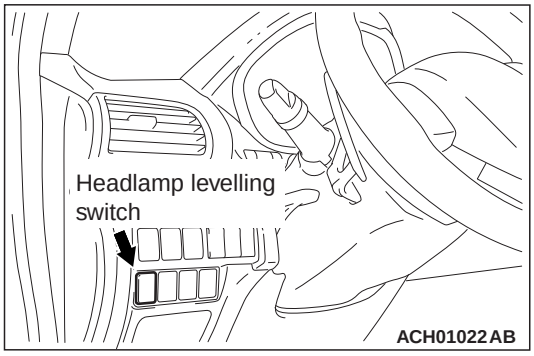

The beam direction of the headlamps changes according to the number of passengers and the amount of load. The headlamp manual levelling function is a system that allows the driver to change the direction of headlamp beam so that the drivers of oncoming cars are not dazzled by the headlamps. The headlamp levelling switch allows changing the direction in five steps: 0 to 4.

Relationship between the switch positions and the number of passengers/loads

Passenger and load	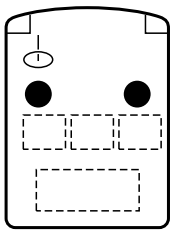 AC607611	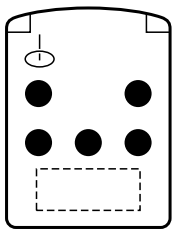 AC607612	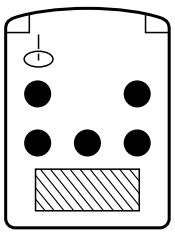 AC607613	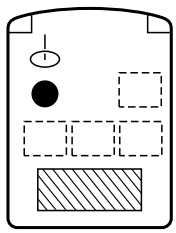 AC607614
	One or two passengers	Five passengers	Five passengers and heavy loads	Driver and heavy loads
Switch position	0	2	3	3 <4WD> or 4 <2WD>

NOTE: Each switch position is for reference. In each switch position, when the headlamp beam is too high, turn the switch to one-level higher position.

Operation

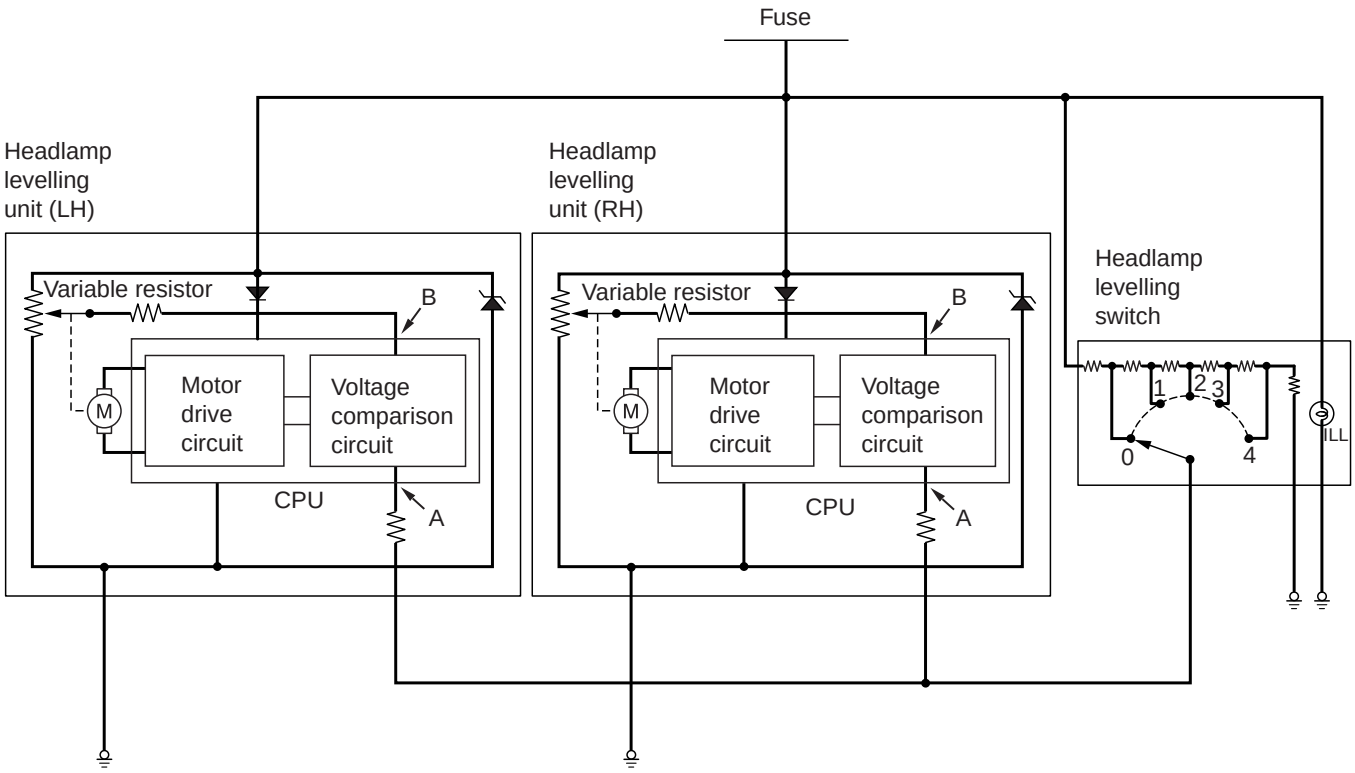

AC314086AB

1. The headlamp levelling switch increases the resistance as it is turned from 0 to 4. Turning the headlamp levelling switch changes the voltage at point A. When the headlamp levelling switch is turned from 0 to 4, the voltage at point A decreases. Upon detection of this voltage change, the headlamp levelling unit turns the motor to lower the beam direction. At this time, the resistance of the variable resistor in the headlamp assembly changes, and the voltage at point B decreases gradually. When the voltages at points A and B become equal, the headlamp levelling unit stops the motor.

2. Turning the headlamp levelling switch from 4 to 0 increases the voltage at point A, and then the headlamp levelling unit turns the motor in the direction opposite to that mentioned in Item 1, increasing the voltage at point B. When the voltages at points A and B become equal, the headlamp levelling unit stops the motor.
3. The headlamp levelling unit detects voltage changes caused by headlamp levelling switch operation, and turns the motor to change the directions of the headlamp reflectors for the adjustment of the headlamp beam direction.

Headlamp automatic levelling system

The beam direction of the headlamps (vertical angle) changes according to the number of passengers and the amount of load. The headlamp automatic levelling system is a system that automatically controls the beam direction of headlamps (up and down angle) when parking or travelling with stable vehicle attitude so that the drivers of oncoming cars and of cars driving in front are not dazzled by the headlamp beam that is directed upwards.

Operational Description

The beam direction of headlamps is automatically controlled according to driving conditions as described in the table below.

Vehicle condition	Control content
When parking	When the engine is stopped with the headlamp (low-beam) ON or when the vehicle is stopped with the headlamp (low-beam) ON and the accelerator pedal is released, the ETACS-ECU controls the beam direction according to the height sensor values of the change in load resulting from getting on/off of passengers or loading/unloading of loads.
When driving at a constant speed	When a vehicle starts on curb, the travelling vehicle posture changes from the posture during parking, so that the beam direction changes. To control the improper beam direction caused by such vehicle attitude change, the ETACS-ECU controls the beam direction while travelling with stable vehicle attitude. This beam direction control while travelling with stable vehicle attitude is performed only once between a vehicle stop and the next stop. When driving is started on a gravel or rough road, the beam direction control is activated after the vehicle attitude becomes stable on a paved road.

System component and function

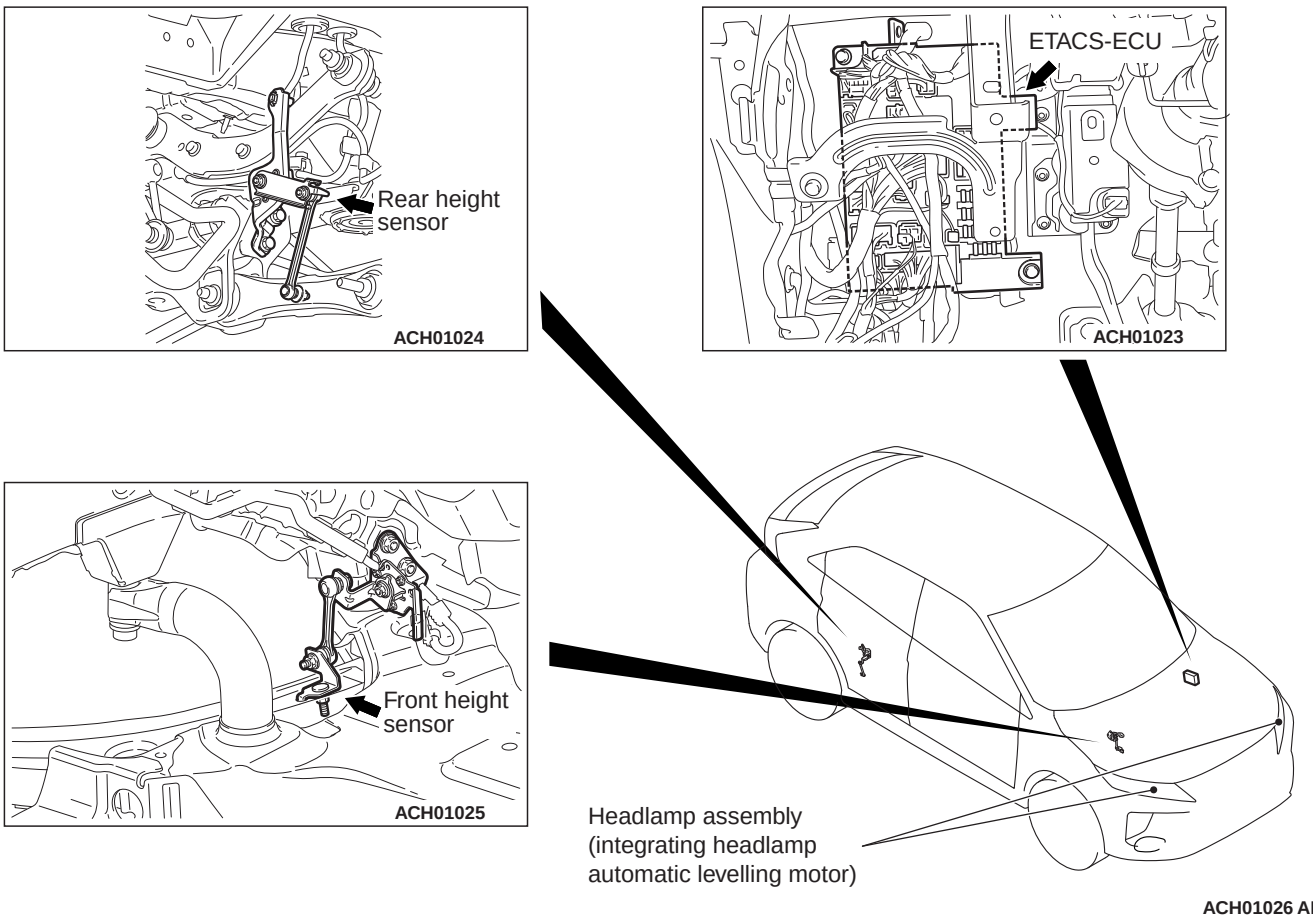

Parts name	Functional description
Ignition switch	Supplies power to the ETACS-ECU when the ignition switch is in the ON position.
Height sensor (front)	Detects the elongation/contraction of the front suspension and transmits the signal to the ETACS-ECU.
Height sensor (rear)	Detects the elongation/contraction of the rear suspension and transmits the signal to the ETACS-ECU.
Headlamp assembly (integrating headlamp automatic levelling motor)	Drives the headlamp reflector by receiving signals from the ETACS-ECU.
Combination meter	Send an odometer indication value to the ETACS-ECU.
ASC-ECU	Transfers the vehicle travel distance information to the ETACS-ECU.
Engine-ECU	Transfers engine speed signals and accelerator pedal position signals to the ETACS-ECU.
ETACS-ECU	• Transfers lighting switch position signals, all door switch ON/OFF signals, tailgate latch switch ON/OFF signals, hazard warning lamp switch ON/OFF signals, headlamp (low-beam) ON/OFF status signals. • Controls the headlamp automatic levelling motor integrated in the headlamp assembly based on the signals form switches and sensors to control the beam direction according to the vehicle posture.

Parts name	Functional description
Diagnosis connector	Outputs diagnosis codes.

System block diagram

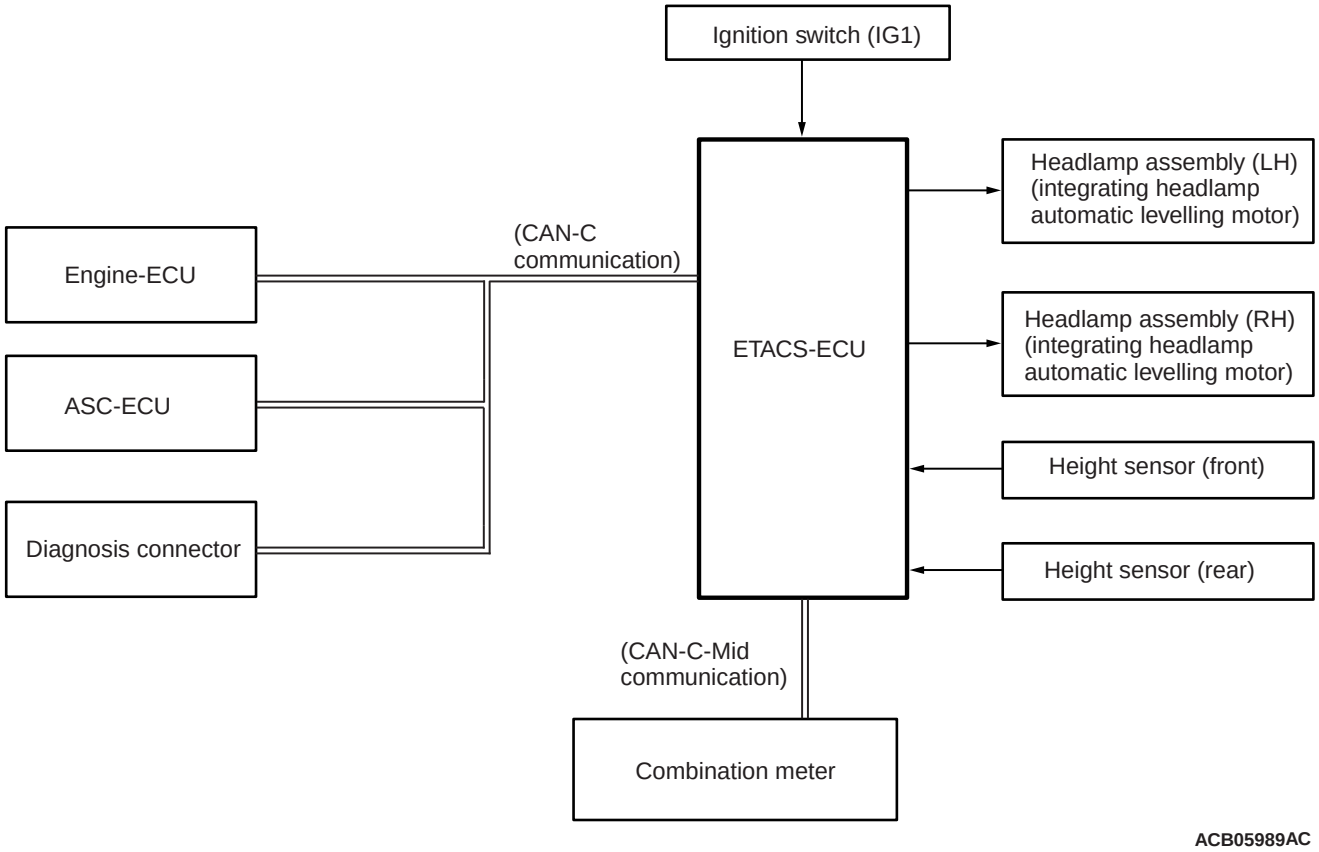

ETACS CUSTOMISATION

Using the ETACS system of M.U.T.-IIISE, the following functions can be programmed. The programmed information is held even when the battery is disconnected.

Adjustment item (M.U.T.-IIISE display)	Adjustment item	Adjusting content (M.U.T.-IIISE display)	Adjusting content
Turn power source	Adjustment of turn-signal lamp operation condition	ACC or IG1	Operable with ACC or ON position
		IG1	Operable with ON position (initial condition)
Comfort flasher	With/without comfort flasher function	Disable	No function
		Enable	With function (initial condition)

Adjustment item (M.U.T.-IIISE display)	Adjustment item	Adjusting content (M.U.T.-IIISE display)	Adjusting content
Hazard answer back	Adjustment of the number of keyless hazard warning lamp answer back flashes	Lock: 1, Unlock: 2	LOCK: Flashes once, UNLOCK: Flashes twice (initial condition)
		Lock: 1, Unlock: 0	LOCK: Flashes once, UNLOCK: No flash
		Lock: 0, Unlock: 2	LOCK: No flash, UNLOCK: Flash twice
		Lock: 2, Unlock: 1	LOCK: Flash twice, UNLOCK: Flash once
		Lock: 2, Unlock: 0	LOCK: Flash twice, UNLOCK: No flash
		Lock: 0, Unlock: 1	LOCK: No flash, UNLOCK: Flash once
		Lock: 0, Unlock: 0	No function
Front wiper operation	Adjustment of the intermittent windshield wiper operation	Normal INT	Intermittent wiper interval is fixed to 4 seconds.
		Variable INT	Intermittent wiper interval is calculated only by the wiper volume control.
		Speed Sensitive	Intermittent wiper interval is calculated according to the intermittent wiper volume control and vehicle speed.
		Rain Sensitive	Intermittent wiper interval is calculated according to the intermittent wiper volume control and lighting control sensor (initial condition).
Front/rear wiper washer	Disabling or enabling washer-linked wiper function	Only Washer	No function
		Washer & Wiper	With function: Without delayed finishing wipe function
		Washer & Wiper with after wiper	With function: With delayed finishing wipe function <Initial condition>
Intermittent time of rear wiper	Adjustment of rear wiper interval	0 sec.	No wiper interval
		4 sec.	4 seconds
		8 sec.	8 seconds (initial condition)
		16 sec.	16 seconds
Rear wiper low speed mode	Disabling or enabling rear wiper continuous operation	Disable	No function
		Enable	With function (initial condition)
Auto fold mirror	Electric folding door mirror automatic unfolding function <Vehicles with electric retractable remote controlled door mirrors>	Not Auto	No synchronised operation
		Open by vehicle speed	Vehicle speed-dependent operation
		Open/Close by IG	Ignition switch linked operation
		Open/Close by Keyless	Keyless entry linked operation (initial condition)

Adjustment item (M.U.T.-IIISE display)	Adjustment item	Adjusting content (M.U.T.-IIISE display)	Adjusting content
Sensitivity for auto lamp	Lighting control sensor sensitivity (illumination intensity)	Level 1 bright	High-high ambient brightness
		Level 2 bright	High ambient brightness
		Level 3	Standard ambient brightness (initial condition)
		Level 4 dark	Low ambient brightness
		Level 5 dark	Low-low ambient brightness
Room lamp delay timer with door	Adjustment of interior lamp delay shutdown time	0 sec.	0 second (no delay shutdown time)
		7.5 sec.	7.5 seconds
		15 sec.	15 seconds (initial condition)
		30 sec.	30 seconds
		60 sec.	60 seconds
		120 sec.	120 seconds
		180 sec.	180 seconds
Head lamp auto cut customize	Adjustment of headlamp automatic shutdown function	Disable	No function
		Enable (B-spec.)	With function (initial condition)
Interior lamp auto cut timer	Adjustment of interior lamp automatic shutdown function operation time	Disable	No function
		3 min	3 minutes
		30 min	30 minutes (initial condition)
		60 min	60 minutes
Auto door unlock	Adjustment of the auto door unlock function	Disable	Without function <M/T, CVT> (initial condition)
		Always(Shift P position)	With function: Operates when the shift lever or the selector lever is moved to the P position. <CVT>
		Always(IG lock position)	With function: Operates when the ignition switch is moved to the LOCK (OFF) position. <M/T, CVT>
Door unlock mode	Adjustment of power door locks with selective unlocking <Vehicles without dead lock system>	All Doors unlock	Without function: The first operation of keyless entry system or unlock operation by KOS unlocks all doors (initial condition).
		Driver's door unlock	With function: The first operation of keyless entry system or unlock operation by KOS unlocks the driver's door only, and the second unlock operation within 2 seconds after that unlocks all doors.
Deadlock button operation	Adjustment of the dead lock system setting procedure <Vehicles with dead lock system>	Twice	Operate the lock switch of the keyless entry system or KOS twice.(initial condition)
		Once	Operate the lock switch of the keyless entry system or KOS once.

Adjustment item (M.U.T.-IIISE display)	Adjustment item	Adjusting content (M.U.T.-IIISE display)	Adjusting content
Timer lock timer	Timer lock period adjustment	30 sec.	30 seconds (initial condition)
		60 sec.	60 seconds
		120 sec.	120 seconds
		180 sec.	180 seconds
Alarm	Enables/disables security alarm <Vehicles with security alarm>	Disable	Without function
		Enable	With function (initial condition)
Duration of pre-alarm	Adjustment of pre-alarm (interior alarm) continue time <Vehicles with security alarm (Without security alarm sensor)>	10 sec.	10 seconds (initial condition)
		6 sec.	6 seconds
Multi mode	Multi-mode keyless entry function customisation <Vehicles with electric retractable remote controlled door mirrors>	Disable	No function
		D/M: Open & Close	Door mirror fold/unfold operation only (initial condition)
KOS key detect out from window	With/without KOS key exterior detection function <Vehicles with KOS>	Enable	No function
		Disable	With function (initial condition)
KOS feature	KOS function adjustment <Vehicles with KOS>	Both enable	All KOS functions are enabled (initial condition).
		Door entry enable	Only door entry function is enabled.
		ENG start enable	Only engine starting function is enabled.
		Both disable	All KOS functions are disabled.
KOS unlock disable time	Adjusts the door unlock inhibition period after door lock is activated. <Vehicles with KOS>	0 sec.	0 second
		3 sec.	3 seconds (Initial condition)
		5 sec.	5 seconds
ACC power auto cut time	Time to ACC power cut-off when the ignition switch is in the ACC position	Disable	No function
		30 min	30 minutes (initial condition)
		60 min	60 minutes
Comfort flasher switch time	Switch operation time to activate the comfort flasher function	Normal	0.4 second (initial condition)
		Long	0.8 second

Adjustment item (M.U.T.-IIISE display)	Adjustment item	Adjusting content (M.U.T.-IIISE display)	Adjusting content
Intelligent/ Comfort washer	With/without Comfort washer function	Disable	No function
		Enable	With function
Coming home lamp	Disabling or enabling coming home light function	Disable	No function
		15 sec.	The headlamps illuminate for 15 seconds.
		30 sec.	The headlamps illuminate for 30 seconds. (initial condition)
		60 sec.	The headlamps illuminate for 60 seconds.
		180 sec.	The headlamps illuminate for 180 seconds.
Welcome lamp	Disabling or enabling welcome light function	Disable	No function
		Small lamp	The tail lamps illuminate. <initial condition>
		Headlamp	The headlamps illuminate.
Rear wiper (linked reverse gear)	Adjustment of automatic rear window wiper operation with reverse gear engaged	Enable(Rear wiper ON)	Operates only when the rear wiper switch is ON.
		Enable(Rear/Front wiper ON)	Operates only when the front or rear wiper switch is ON (initial condition).
Sensitivity for security sensor	Sensitivity level setting of security alarm sensor <Vehicles with security alarm (With security alarm sensor)>	Level 1	100% sensitivity of security alarm sensor (initial condition)
		Level 2	90% sensitivity of security alarm sensor
		Level 3	80% sensitivity of security alarm sensor
		Level 4	70% sensitivity of security alarm sensor
Outer buzzer volume	KOS outer buzzer volume adjustment <Vehicles with KOS>	Volume 1	Quieter than the standard
		Volume 2	Standard volume (Initial condition)
		Volume 3	Louder than the standard
A/C recirculation control	With/without inside/ outside air automatic control function	Disable	No function
		Enable	With function (Initial condition)
A/C switch control	With/without A/C automatic control function	Disable	No function
		Enable	With function (Initial condition)

Adjustment item (M.U.T.-IIISE display)	Adjustment item	Adjusting content (M.U.T.-IIISE display)	Adjusting content
A/C sensible temperature customize	Adjusting mean value for temperature setting	-2	Decreases the control temperature two degrees than the temperature displayed on the LCD.
		-1	Decreases the control temperature one degree than the temperature displayed on the LCD.
		0	No change (Initial condition)
		1	Increases the control temperature one degree than the temperature displayed on the LCD.
		2	Increases the control temperature two degrees than the temperature displayed on the LCD.
ECO mode	Function to activate ECO mode air-conditioner	ECO	Activates the ECO mode.
		Comfort	Deactivates the ECO mode.
FOOT / DEF air outlet ratio	Changes air distribution rate for DEF/FOOT vents during manual operation.	Normal	D/F2 (Initial condition)
		FOOT > DEF	D/F1(more to FOOT vent): More air flows through FOOT vents.
		FOOT < DEF	D/F3(more to DEF vent): More air flows through DEF vents.
FACE / FOOT air outlet ratio	Changes air distribution rate for FACE/FOOT vents during manual operation.	Normal	B/L2 (Initial condition)
		FACE > FOOT	B/L1(more to FACE vent): More air flows through FACE vents.
		FACE < FOOT	B/L3(more to FOOT vent): More air flows through FOOT vents.
Auto rear defogger (Engine start)	Activates the rear window defogger when the ambient temperature is low. (The rear window defogger has never been activated since the ignition switch was turned on last time)	Disable	No function (Initial condition)
		Enable	With function

4.13. Battery(ies)

M6131300000012

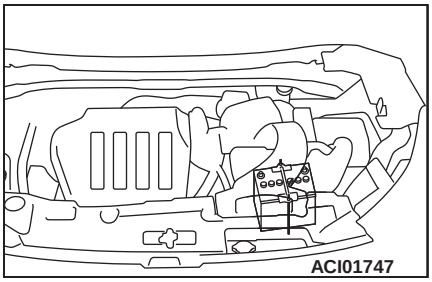

Item	Specifications
Type	Q-85
Voltage V	12
Capacity (5-hour rate) Ah	55
Electrolytic fluid specific gravity (fully charged state at 20°C)	1.250 – 1.290

GROUP 5

AXLES, WHEELS, TYRES AND SUSPENSION

CONTENTS

5.1. AXLES 5-2
5.1.1. Axles 5-2
5.1.2. Stub axles 5-7
5.1.3. Wheel bearings 5-7

5.2. WHEELS AND TYRES 5-8
5.2.1. Road wheel hub 5-8
5.2.2. Wheels 5-8
5.2.3. Tyres 5-9

5.3. SUSPENSION SYSTEM 5-14
5.3.1. Springs and stabiliser 5-14
5.3.2. Shock absorbers 5-14
5.3.2.1. efficiency testing of damping (X)2 . 5-14
5.3.3. Torque tubes, radius arms, wishbones and suspension arms 5-14
5.3.4. Suspension joints 5-14
5.3.5. Air suspension 5-14

5.1. Axles

5.1.1. Axles

M6140100100013

For the front axle, the multi-line angular contact ball bearing with an integral oil seal is adopted as a wheel bearing, and constant velocity joint as a driveshaft.
It has the following features:

- The lightweight and compact constant velocity joint is installed on the wheel side of the driveshaft, and the vibration reduced constant velocity joint is installed on the differential side.
- For the driveshaft (RH), instead of the conventional output shaft, the long stem integrated with the differential side constant velocity joint is adopted to streamline the structure. <4WD>
- Dynamic damper is mounted on driveshaft to reduce differential booming noise.
- Lead-free grease for the constant velocity joint is adopted.
- Hexavalent chromium is eliminated from the dust cover material.
- The number of parts is reduced by integrating the magnetic encoder for ABS wheel speed detection into the wheel bearing.

SPECIFICATIONS

Item		Specifications
Wheel bearing	Bearing type	Unit bearing (Double-row angular contact ball bearing)
Drive shaft	Joint type	Constant velocity joint

CONSTRUCTION DIAGRAM

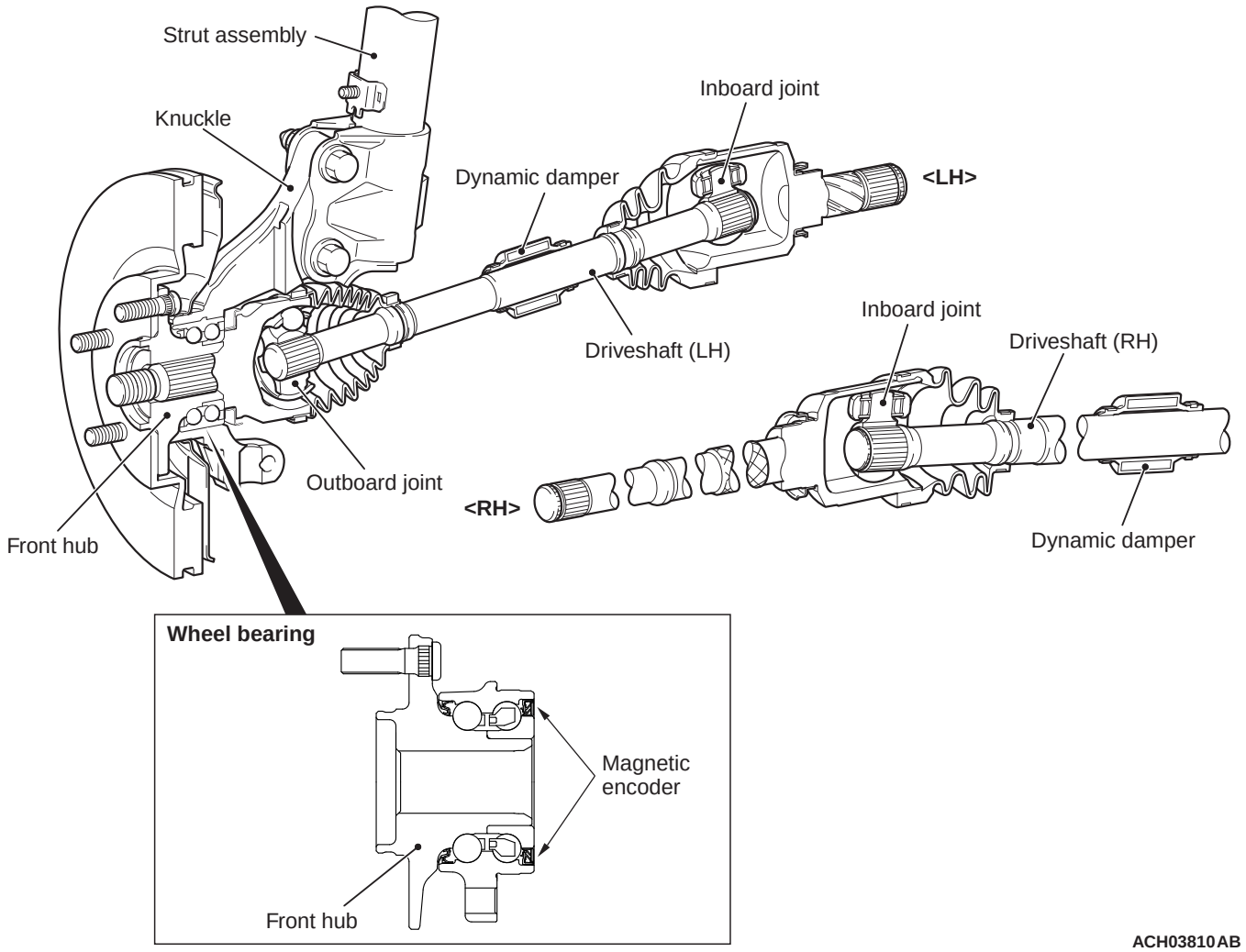

REAR AXLE <2WD>

The rear axle has the following features:

- The wheel bearing is a unit ball bearing (double-row angular contact ball bearing) which incorporates the oil seals and is highly resistant to thrust loads.
- The number of parts has been reduced by integrating the magnetic encoder for wheel speed detection into the wheel bearing.

SPECIFICATIONS

Item		Specification
Wheel bearing	Bearing type	Unit ball bearing (double-row angular contact ball bearing)

CONSTRUCTION DIAGRAM

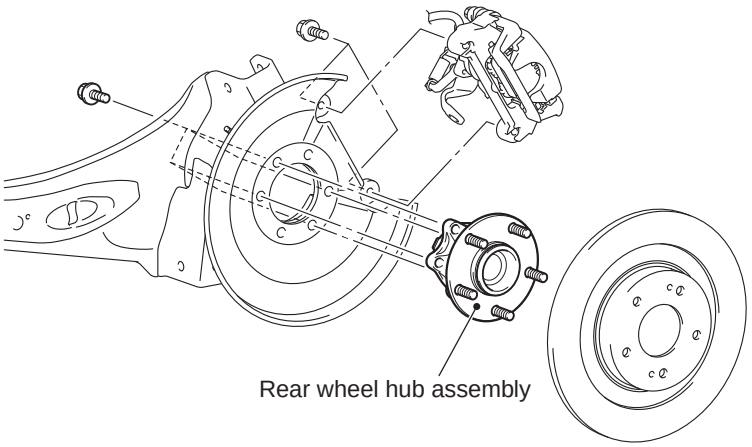

ACH03811AB

REAR AXLE <4WD>

For the rear axle, the unit ball bearing (double-row angular contact ball bearing) in which the hub and ball bearing are incorporated has been adopted for the wheel bearing, and the constant velocity joint for the driveshaft.
The following features are also available.

- The lightweight and compact constant velocity joint has been installed on the wheel side of the driveshaft, and the lightweight compact constant velocity joint has been installed on the differential side.
- Adoption of the electronic control 4WD optimizes the size of the driveshaft constant velocity joint and achieves the weight saving.
- Lead-free grease for the constant velocity joint has been adopted.
- Hexavalent chromium has been eliminated from the dust cover material.
- The number of parts has been reduced by integrating the magnetic encoder for wheel speed detection into the wheel bearing.

SPECIFICATIONS

Item		Specification
Wheel bearing	Bearing type	Unit ball bearing (double-row angular contact ball bearing)
Driveshaft	Joint type	Constant velocity joint

CONSTRUCTION DIAGRAM

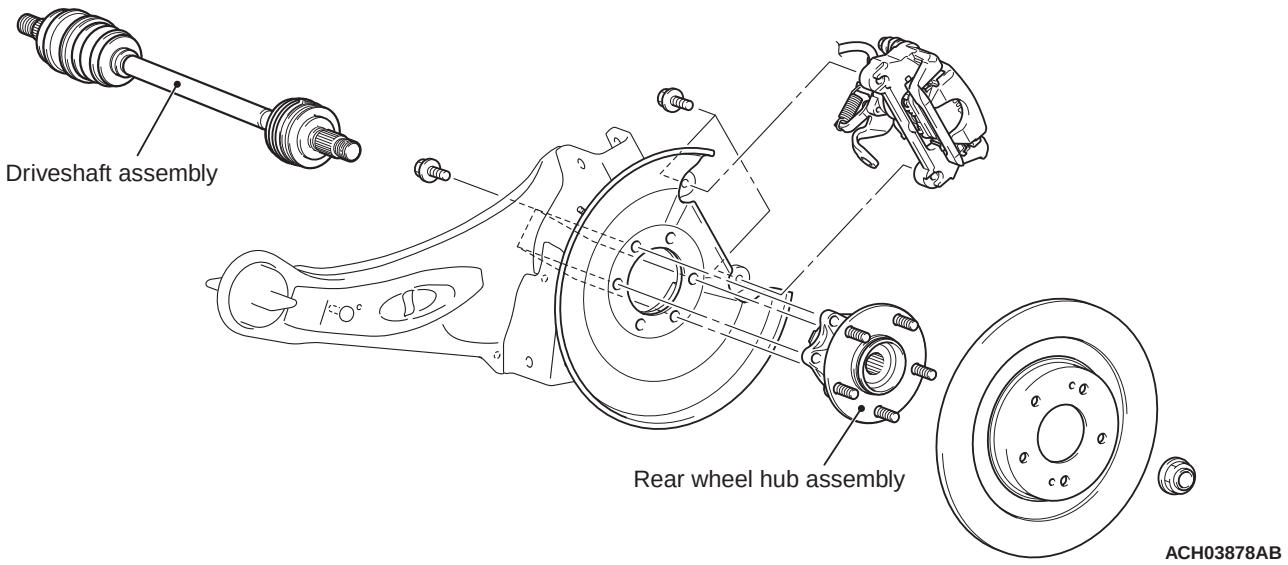

CHECK SUSPENSION SYSTEM FOR DAMAGE AND LOOSENESS

1. Check each portion of suspension for damage visually.
2. Check each installation bolt and nut for looseness by spanner or similar tool.

FRONT SUSPENSION

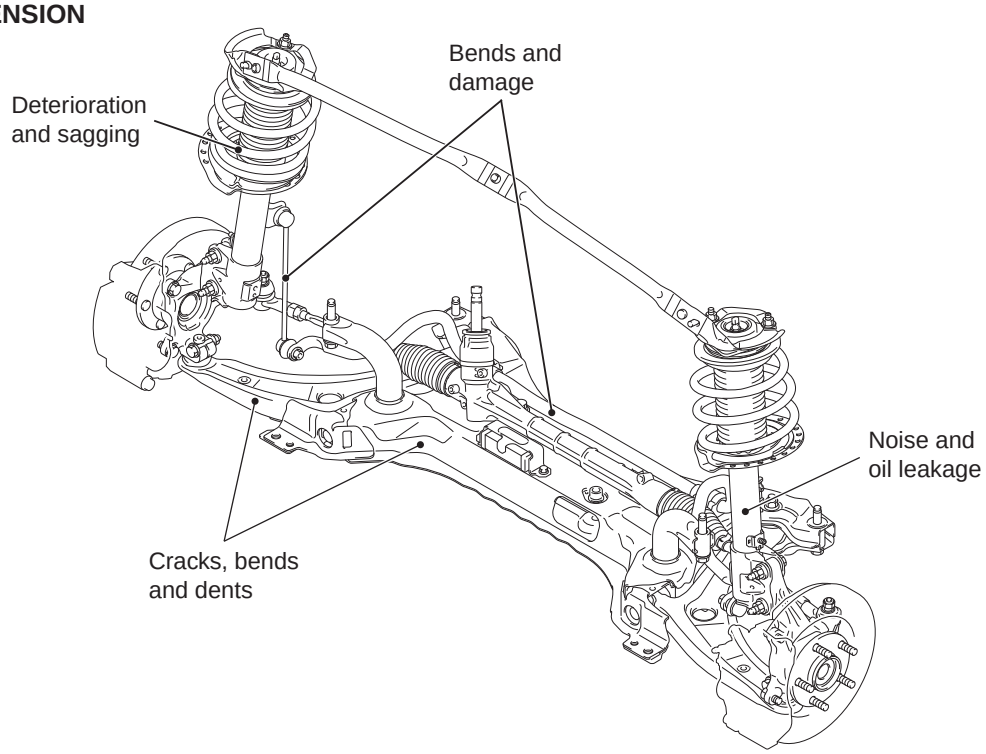

REAR SUSPENSION

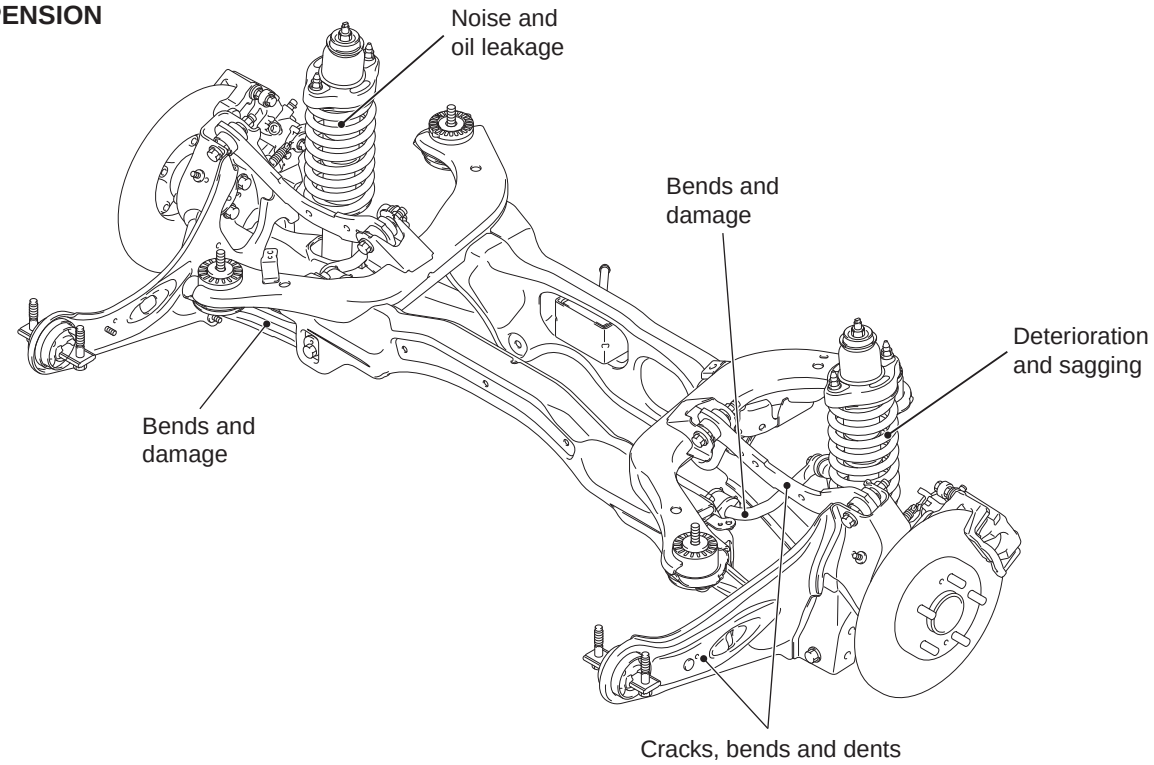

ACH03815 AB

CHECK SUSPENSION ARM BALL JOINTS FOR PLAY, AND DUST COVERS FOR DAMAGE

LOWER ARM BALL JOINT AXIAL PLAY CHECK

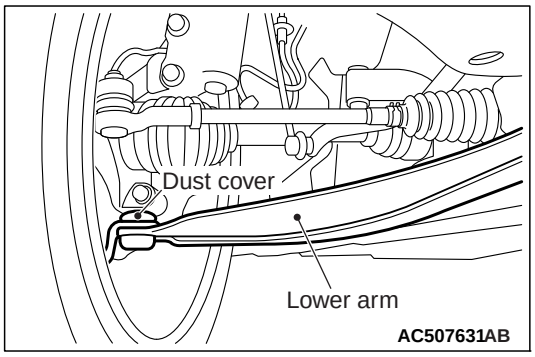

1. Raise the vehicle.
2. Move the lower arm up and down with your hands to check for an excessive play in the axial direction of the ball joint. If there is an excessive play, replace the lower arm assembly.

DUST COVERS FOR DAMAGE

Check dust covers for damage.

CHECK DRIVESHAFT BOOTS FOR DAMAGE

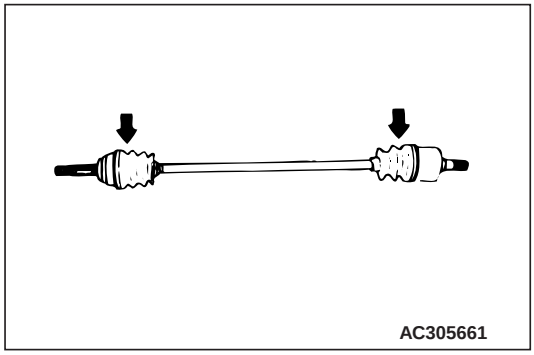

Check the driveshaft boots for damage.

CHECK FRONT AND REAR WHEEL BEARINGS FOR PLAY

1. Remove the wheel assembly and the brake pad assembly.
2. Insert M12 plain washers, and tighten the nuts (M12 × 1.5) diagonally and evenly to the specified torque (98±10N·m) to secure the brake disc to the hub assembly.

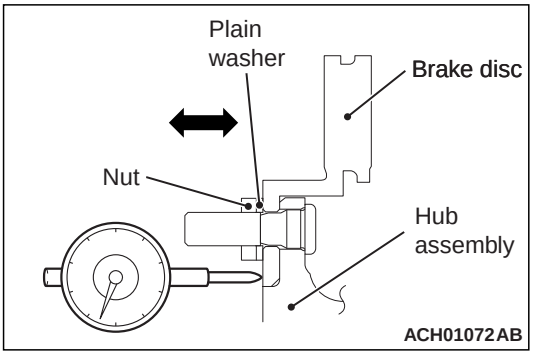

3. Set a dial gauge as shown in the figure. Move the hub in the axial direction and measure the axial play.

   Limit:
   0.05 mm <Front>
   0.05 mm <Rear>

4. On completion, install the wheel assembly and the brake pad assembly.

5.1.2. Stub axles

M6140100200010

"Not Applicable"

5.1.3. Wheel bearings

M6140100300017

"Not Applicable"

5.2. Wheels and tyres

5.2.1. Road wheel hub

M6140200100010

"Not Applicable"

5.2.2. Wheels

M6140200200017

The wheels and tyres of the following specifications have been established.

SPECIFICATIONS

Road wheel and tyre

Item		**INVITE**			**INTENSE**
		Standard	**Option**		–
Wheel	Type	Aluminium type	Steel type	Aluminium type	Aluminium type
	Size	16 × 6 1/2J	16 × 6 1/2JJ	18 × 7J	18 × 7J
	Amount of wheel offset (inset) (mm)	38	38	38	38
	PCD (mm)	114.3	114.3	114.3	114.3
Tyre	Size	215/70R16 100H	215/70R16 100H	225/55R18 98H	225/55R18 98H

NOTE: PCD indicates the pitch circle diameter of the wheel installation holes.

Spare wheel and tyre

Item		**Specifications**	
		Option	
Wheel	Type	Steel type	
	Size	16 × 4T	17 × 4T
	Amount of wheel offset (inset) (mm)	40	40
	PCD (mm)	114.3	114.3
Tyre	Size	T155/90D16 110M	T155/80D17 100M

NOTE: PCD indicates the pitch circle diameter of the wheel installation holes.

WHEEL AND TYRE

16 inch wheel cover **16 inch aluminium wheel** **18 inch aluminium wheel**

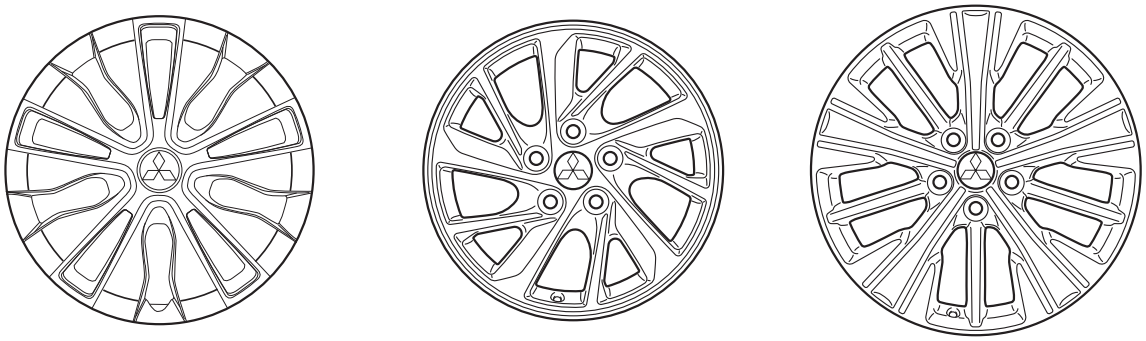

ACH02698AB

FLAT TYRE TEMPORARY REPAIR KIT

The flat tyre temporary repair kit consists of the flat tyre temporary repair agent set and the air compressor, and the kit is stored under the luggage floor board.

1. The flat tyre temporary repair agent set consists of the flat tyre temporary repair agent, injection hose, valve core, valve core turner, vehicle speed restriction sticker, and user's manual.
2. Power supply for the air compressor is available at the cigarette lighter (DC 12V) only.
3. When repairing or replacing the tyre to which the flat tyre temporary repair kit was used, it is necessary to drain the repair agent remaining in the tyre.
4. When a puncture point can be identified, the tyre can be repaired according to a normal procedure. However, if the puncture point cannot be identified, replace the tyre.

SPECIFICATIONS

Items		**Specifications**
Flat tyre temporary repair agent	Repair agent volume (mL)	630
	Repairable area	Nail puncture hole of 4 mm or less at tyre tread
	Shelf life	Shelf life is indicated on the repair agent bottle.
	Disposal method	Waste oil disposal
Air compressor	Relief valve operating pressure (kPa)	350
	Air compressor maximum current	10A or less
	Air gauge indication error	±3% or less

5.2.3. Tyres

M6140200300014

The wheels and tyres of the following specifications have been established.

SPECIFICATIONS

Road wheel and tyre

Item		**INVITE**			**INTENSE**
		Standard	**Option**		–
Wheel	Type	Aluminium type	Steel type	Aluminium type	Aluminium type
	Size	16 × 6 1/2J	16 × 6 1/2JJ	18 × 7J	18 × 7J
	Amount of wheel offset (inset) (mm)	38	38	38	38
	PCD (mm)	114.3	114.3	114.3	114.3
Tyre	Size	215/70R16 100H	215/70R16 100H	225/55R18 98H	225/55R18 98H

NOTE: PCD indicates the pitch circle diameter of the wheel installation holes.

Spare wheel and tyre

Item		**Specifications**	
		Option	
Wheel	Type	Steel type	
	Size	16 × 4T	17 × 4T
	Amount of wheel offset (inset) (mm)	40	40
	PCD (mm)	114.3	114.3

Item		Specifications	
		Option	
Tyre	Size	T155/90D16 110M	T155/80D17 100M

NOTE: PCD indicates the pitch circle diameter of the wheel installation holes.

WHEEL AND TYRE

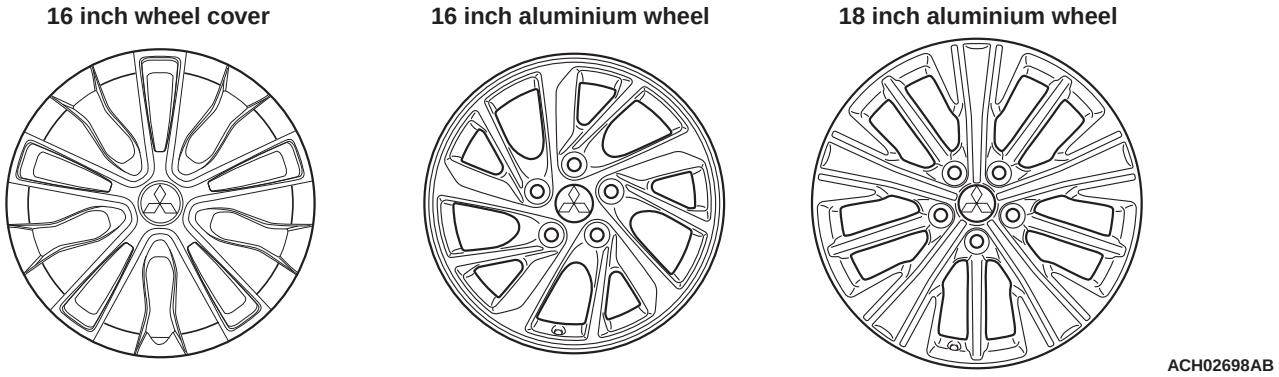

FLAT TYRE TEMPORARY REPAIR KIT

The flat tyre temporary repair kit consists of the flat tyre temporary repair agent set and the air compressor, and the kit is stored under the luggage floor board.

1. The flat tyre temporary repair agent set consists of the flat tyre temporary repair agent, injection hose, valve core, valve core turner, vehicle speed restriction sticker, and user's manual.
2. Power supply for the air compressor is available at the cigarette lighter (DC 12V) only.
3. When repairing or replacing the tyre to which the flat tyre temporary repair kit was used, it is necessary to drain the repair agent remaining in the tyre.
4. When a puncture point can be identified, the tyre can be repaired according to a normal procedure. However, if the puncture point cannot be identified, replace the tyre.

SPECIFICATIONS

Items		Specifications
Flat tyre temporary repair agent	Repair agent volume (mL)	630
	Repairable area	Nail puncture hole of 4 mm or less at tyre tread
	Shelf life	Shelf life is indicated on the repair agent bottle.
	Disposal method	Waste oil disposal
Air compressor	Relief valve operating pressure (kPa)	350
	Air compressor maximum current	10A or less
	Air gauge indication error	±3% or less

TYRE PRESSURE MONITORING SYSTEM (TPMS)

When the tyre pressure becomes under the specified value, the TPMS function warns the driver of that state by illuminating the TPMS warning lamp and the multi-information display in the combination meter warn the driver when there is a TPMS-related problem.

CONSTRUCTION DIAGRAM

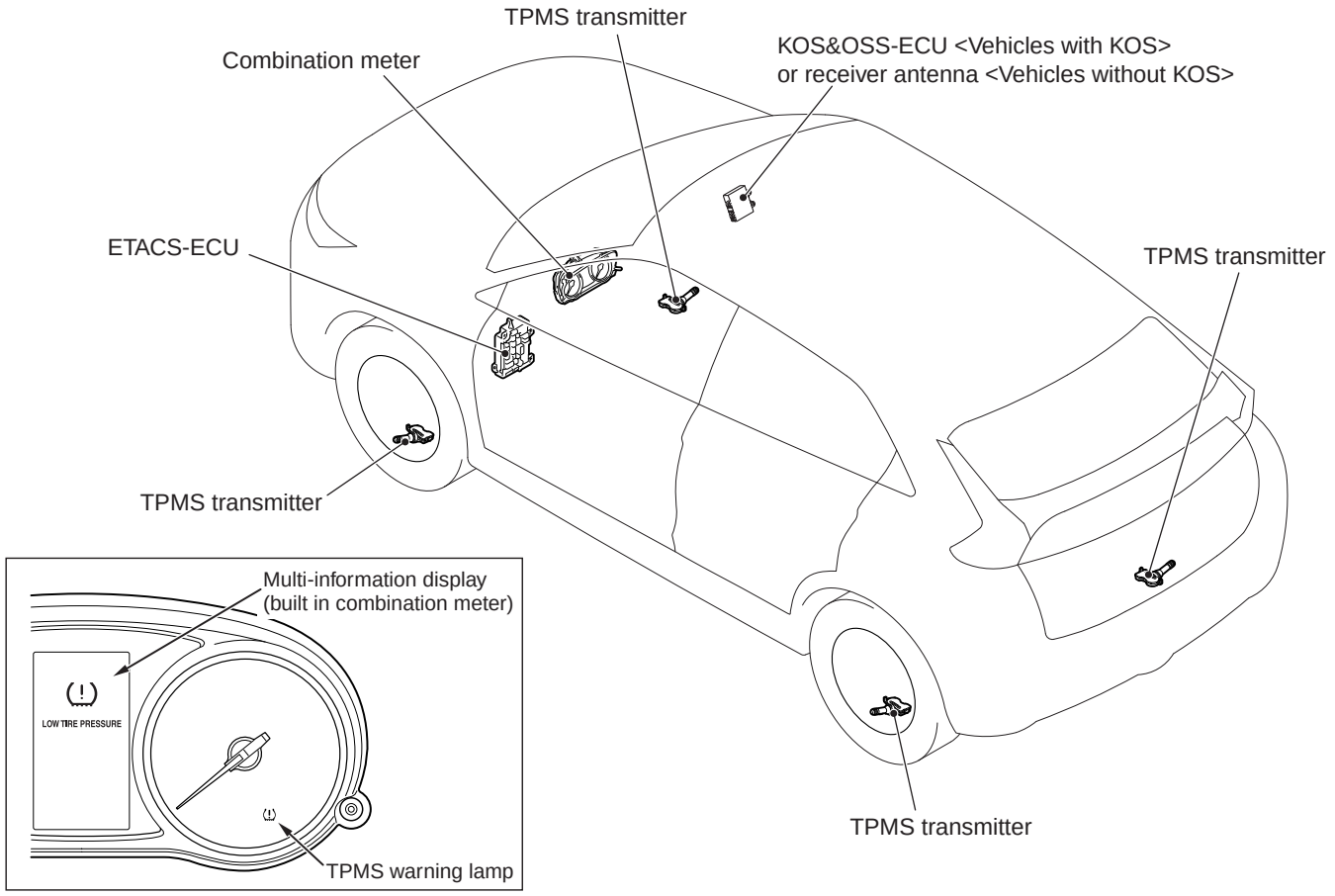

ACH03482AB

Main components and functions

Parts name	Functional description
KOS&OSS-ECU	Wireless communication with the TPMS transmitter <Vehicles with KOS>
ETACS-ECU	Wire communication with the receiver antenna <Vehicles without KOS>
Receiver antenna	Wireless communication with the TPMS transmitter <Vehicles without KOS>
TPMS transmitter	Measure tyre pressure directly, then send radio frequency signal to receiver antenna module.

Parts name	Functional description
Combination meter (Multi information display, TPMS warning lamp, low tyre inflation pressure warning threshold value reset function, tyre ID set changeover function)	Communicates with KOS&OSS-ECU or ETACS-ECU via CAN. Receives the warning request or warning information from KOS&OSS-ECU or ETACS-ECU, activates* the warning lamp. Warning symbol and message is additionally displayed on the multi information display. When executing the low tyre inflation pressure warning threshold value reset function and the tyre ID set changeover function, the execution menu is displayed.

*NOTE: *: Illuminates for tyre pressure warning. Flashes for about 1 minute and then continuously illuminated for TPMS malfunction warning.*

System configuration

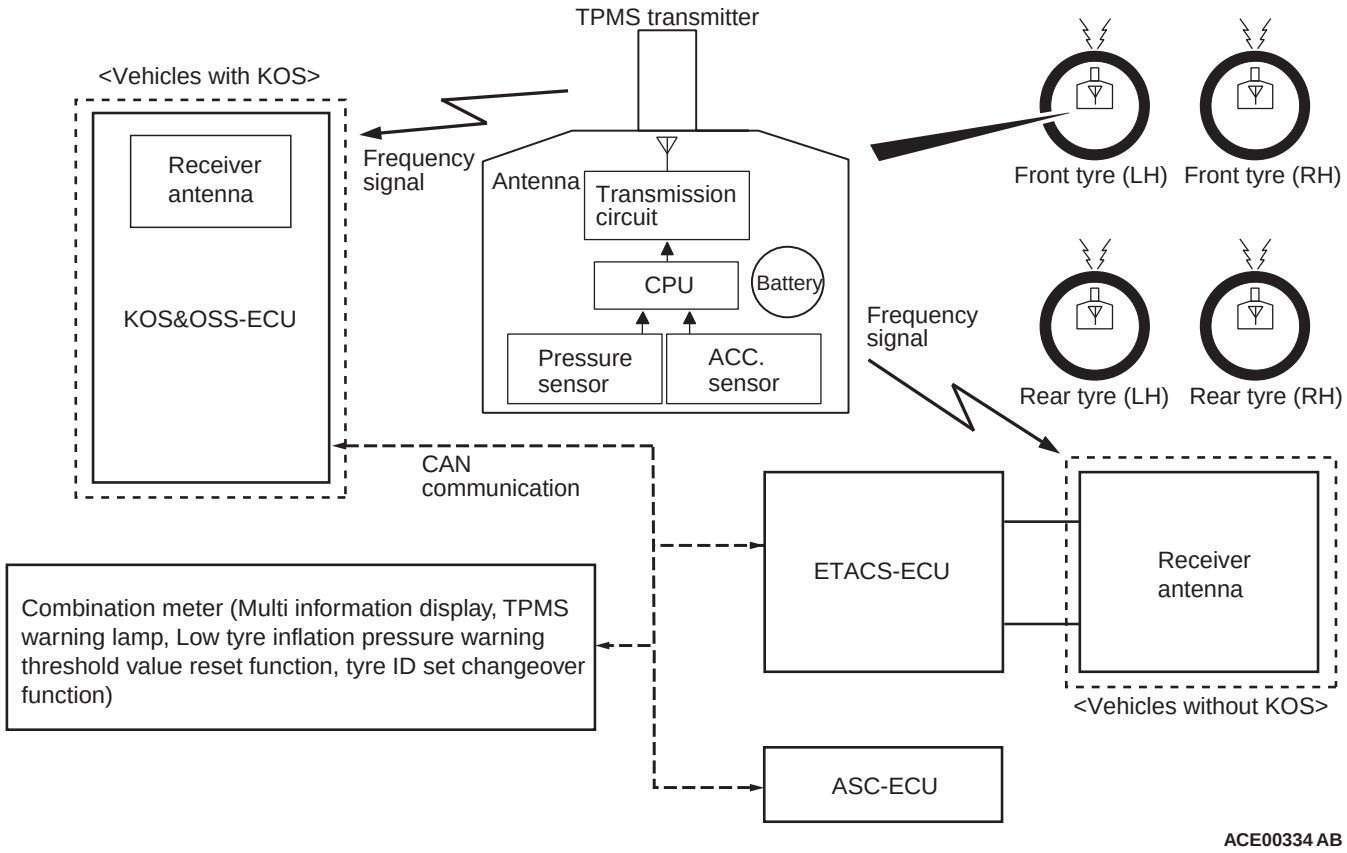

TYRE PRESSURE MONITORING SYSTEM (TPMS) FUNCTION

When the tyre pressure becomes under the specified value, the TPMS function warns the driver of that state by illuminating the TPMS warning lamp.

OPERATION

- The signals from the TPMS transmitter are received by the KOS&OSS-ECU or ETACS-ECU via receiver antenna.
- KOS&OSS-ECU or ETACS-ECU processes input signals from each TPMS transmitter as well as vehicle speed signals from the ASC-ECU. It receives the atmospheric pressure signal from engine-ECU, and when the atmospheric pressure is low (such as at high altitude), it calibrates the tyre pressure received from TPMS transmitter and makes a judgement of warning. When the road tyre pressure is low, it sends a warning signal causing the TPMS warning lamp to be illuminated. When the TPMS has problems, it sends a warning signal causing the TPMS warning lamp to be flashed*.

*NOTE: *: Change to continuous illumination after flashing for about 1 minute.*

- For 3 seconds after the engine switch is turned to the "ON" position, KOS&OSS-ECU or ETACS-ECU illuminates the TPMS warning lamp to check any breaks in the TPMS warning lamp circuit.
- By connecting the M.U.T.-IIISE to the diagnosis connector, data stored in KOS&OSS-ECU or ETACS-ECU (data of tyre pressure and TPMS transmitter ID, the alarm status and warning history, etc.) can be displayed and TPMS transmitter ID can be registered.
- Two sets of four TPMS transmitters can be registered as sets 1 and 2.

NOTE: If the TPMS transmitter is replaced, register the ID codes of all TPMS transmitters again about the ID set of tyre which includes the replaced transmitter using the M.U.T.-IIISE.

- Low tyre inflation pressure warning threshold value reset and tyre ID set changeover can be performed. (By registering two sets at the dealer in advance, the tyre ID set can be freely switched by operating the combination meter.)

NOTE: When the tyre ID set is switched, the low tyre inflation pressure warning threshold value will be automatically reset.

TPMS TRANSMITTER (TYRE PRESSURE SENSOR)

The TPMS transmitter combines the valve and tyre pressure sensor in a single unit. The TPMS transmitters are mounted inside the tyres. The TPMS transmitter measures tyre pressure directly with its tyre pressure sensor and sends radio frequency signals to KOS&OSS-ECU or ETACS-ECU. The TPMS transmitter includes acceleration sensor that senses tyre rotation, and change tyre pressure sampling and data transmission timing when vehicle is running.

NOTE: Use only genuine wheels. The use of non-genuine wheels may cause the improper installation of the TPMS transmitters, possibly resulting in air leakage and damage to the TPMS transmitter.

TYRE PRESSURE SAMPLING TIMING

Vehicle status	Sampling timing
At vehicle moving	once every 5 seconds
At vehicle stationary	once every 1 minute

NOTE: Vehicle moving = vehicle speed: approximately 25 km/h or more

DATA TRANSMISSION TIMING

Vehicle status	Transmission timing
At vehicle moving	once every 1 minute*
At vehicle stationary	once every 13 hours

If a sampled pressure varies by ±10 kPa from the last transmitted pressure value, an additional transmission will occur.

*NOTE: *: Once every 15 seconds for first 30 transmission after vehicle starts moving.*

5.3. Suspension system

5.3.1. Springs and stabiliser

M6140300100017

"Not Applicable"

5.3.2. Shock absorbers

M6140300200014

"Not Applicable"

5.3.2.1. efficiency testing of damping (X)2

M6140310100018

"Not Applicable"

5.3.3. Torque tubes, radius arms, wishbones and suspension arms

M6140300300011

"Not Applicable"

5.3.4. Suspension joints

M6140300400018

"Not Applicable"

5.3.5. Air suspension

M6140300500015

"Not Applicable"

GROUP 6

CHASSIS AND CHASSIS ATTACHMENTS

CONTENTS

6.1. CHASSIS OR FRAME AND ATTACHMENTS 6-2

6.1.1. General condition 6-2
6.1.2. Exhaust pipes and silencers 6-2
6.1.3. Fuel tank and pipes (including heating fuel tank and pipes) 6-2
6.1.4. Bumpers, lateral protection and rear underrun devices 6-3
6.1.5. Spare wheel carrier (if fitted) 6-3
6.1.6. Mechanical coupling and towing device 6-3
6.1.7. Transmission 6-3
6.1.8. Engine mountings 6-3
6.1.9 Engine performance (X) 2 6-3

6.2. CAB AND BODYWORK 6-4

6.2.1. Condition 6-4
6.2.2. Mounting 6-4
6.2.3. Doors and door catches 6-4
6.2.4. Floor 6-4
6.2.5. Driver's seat 6-4
6.2.6. Other seats 6-4
6.2.7. Driving controls 6-4
6.2.8. Cab steps 6-4
6.2.9. Other interior and exterior fittings and equipment 6-4
6.2.10. Mudguards (wings), spray suppression devices 6-4
6.2.11. Stand 6-4
6.2.12. Handgrips and footrests 6-4

6.1. Chassis or frame and attachments

6.1.1. General condition

M6150100100014

"Not Applicable"

6.1.2. Exhaust pipes and silencers

M6150100200011

"Not Applicable"

6.1.3. Fuel tank and pipes (including heating fuel tank and pipes)

M6150100300018

<2WD>

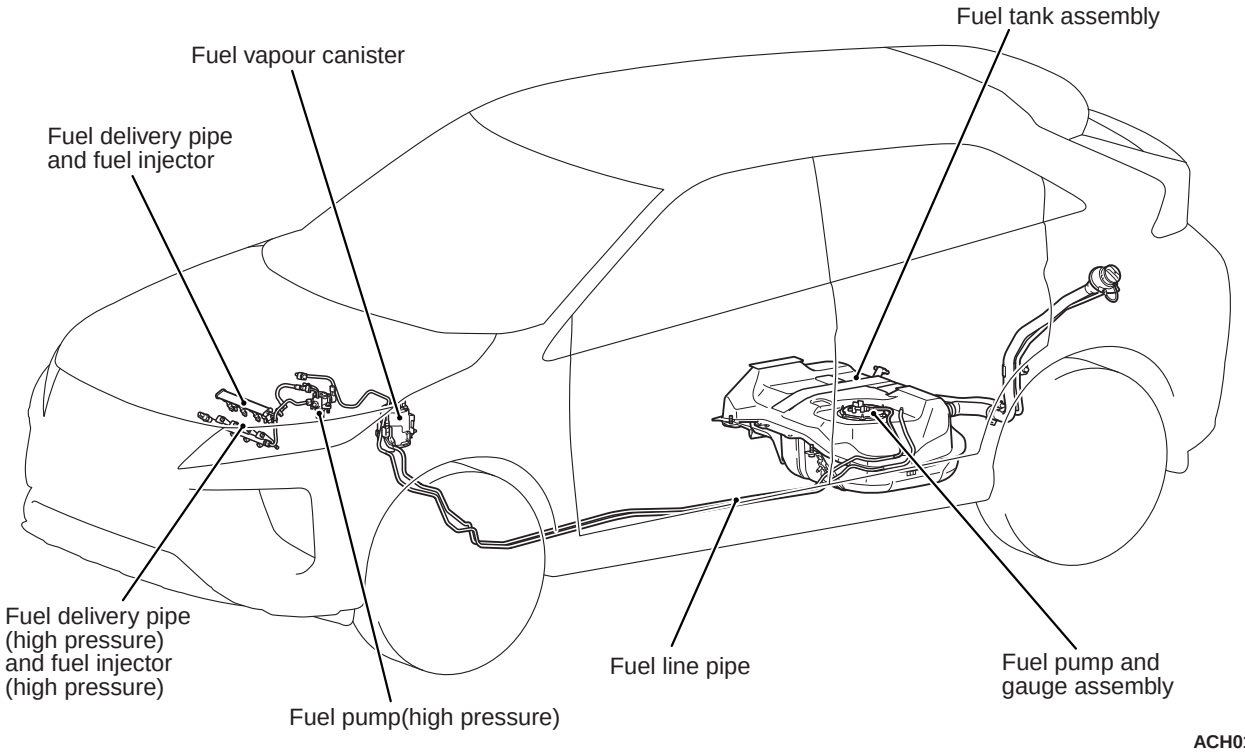

ACH01288AB

<4WD>

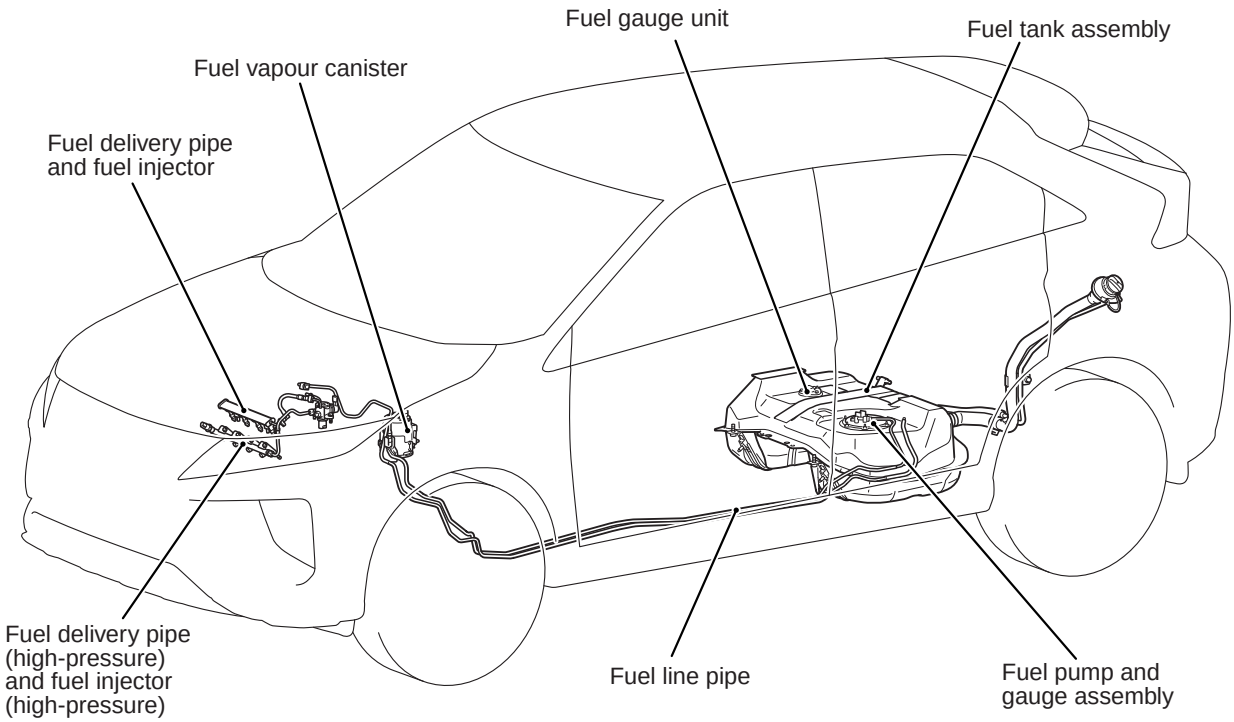

ACH01289AB

6.1.4. Bumpers, lateral protection and rear underrun devices

M6150100400015

"Not Applicable"

6.1.5. Spare wheel carrier (if fitted)

M6150100500012

"Not Applicable"

6.1.6. Mechanical coupling and towing device

M6150100600019

"Not Applicable"

6.1.7. Transmission

M6150100700016

"Not Applicable"

6.1.8. Engine mountings

M6150100800013

"Not Applicable"

6.1.9 Engine performance (X) 2

M6150100900010

“Query raised for this content”

6.2. Cab and bodywork

6.2.1. Condition

M6150200100011

"Not Applicable"

6.2.2. Mounting

M6150200200018

"Not Applicable"

6.2.3. Doors and door catches

M6150200300015

"Not Applicable"

6.2.4. Floor

M6150200400012

"Not Applicable"

6.2.5. Driver's seat

M6150200500019

"Not Applicable"

6.2.6. Other seats

M6150200600016

- Max Number of seats total (excluding driver's seat) - 4
- Number of rear-facing seats - 0

6.2.7. Driving controls

M6150200700013

"Not Applicable"

6.2.8. Cab steps

M6150200800010

"Not Applicable"

6.2.9. Other interior and exterior fittings and equipment

M6150200900017

"Not Applicable"

6.2.10. Mudguards (wings), spray suppression devices

M6150201000017

"Not Applicable"

6.2.11. Stand

M6150201100014

"Not Applicable"

6.2.12. Handgrips and footrests

M6150201200011

"Not Applicable"

GROUP 7

OTHER EQUIPMENT

CONTENTS

7.1. SAFETY-BELTS/BUCKLES AND RESTRAINT SYSTEMS (AS REGARDS L CATEGORY: L6/L7). 7-2

7.1.1. Security of safety-belts/buckles mounting 7-2

7.1.2. Condition of safety-belts/buckles. . . . 7-4

7.1.3. Safety belt load limiter. 7-6

7.1.4. Safety belt Pre-tensioners. 7-7

7.1.5. Airbag 7-13

7.1.6. SRS Systems 7-18

7.2. FIRE EXTINGUISHER (X)2. 7-23

7.3. LOCKS AND ANTI-THEFT DEVICE 7-23

7.4. WARNING TRIANGLE (IF REQUIRED) (X)2. 7-23

7.5. FIRST AID KIT. (IF REQUIRED) (X)2 7-23

7.6. WHEEL CHOCKS (WEDGES) (IF REQUIRED) (X)2. 7-23

7.7. AUDIBLE WARNING DEVICE. . . 7-23

7.8. SPEEDOMETER 7-23

7.9. TACHOGRAPH (IF FITTED/REQUIRED) 7-24

7.10. SPEED LIMITATION DEVICE (IF FITTED/ REQUIRED) 7-24

7.11 ODOMETER IF AVAILABLE (X)2 7-24

7.12 ELECTRONIC STABILITY CONTROL (ESC) IF FITTED/REQUIRED. 7-25

7.1. Safety-belts/buckles and restraint systems (as regards L category: L6/L7)

7.1.1. Security of safety-belts/buckles mounting

M6160100100015

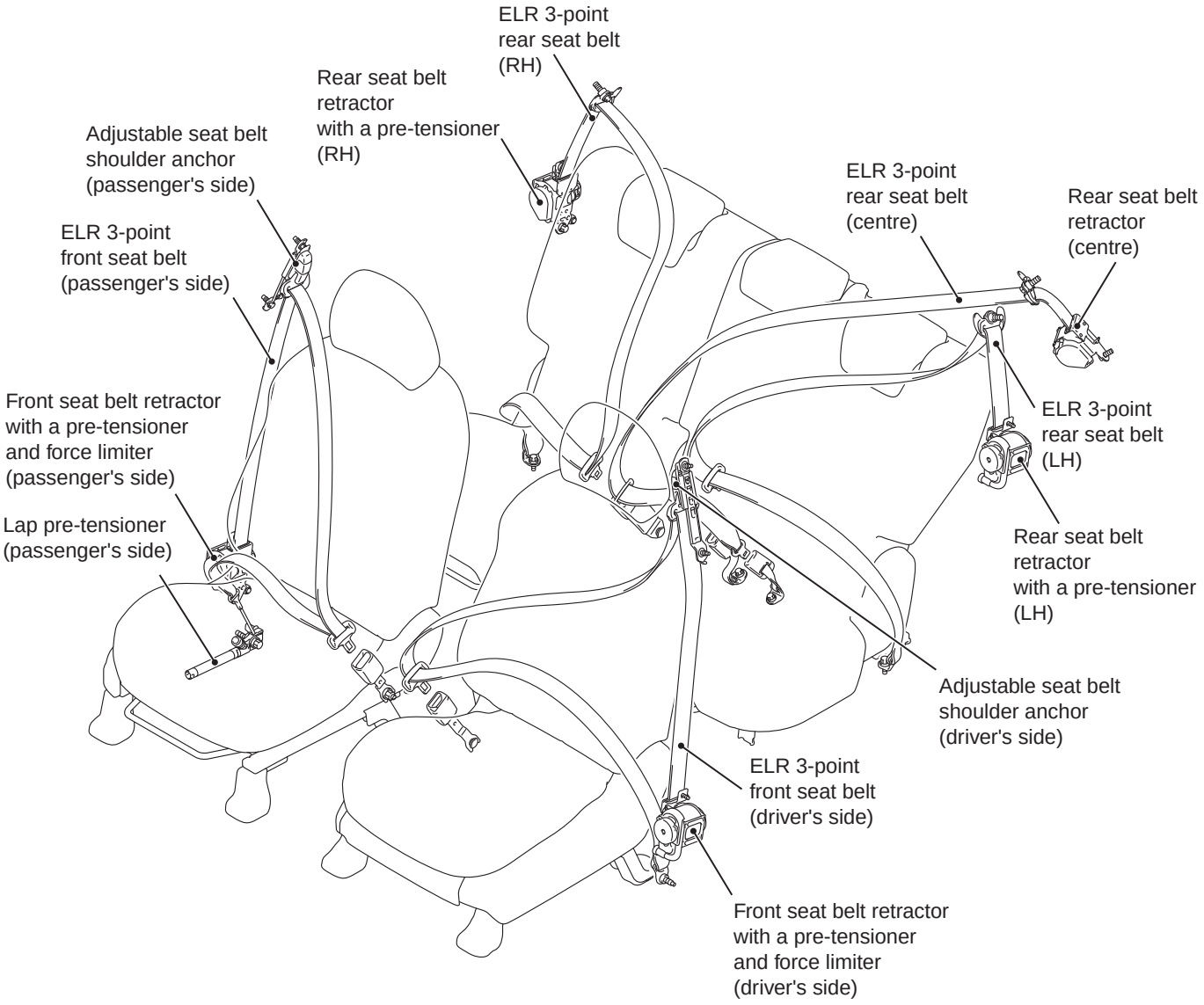

ACH02939AB

- By making the buckles of all the seats free-standing, you can wear the seat belts more comfortably.

Front seat belt

- The 3-point seat belt with ELR has been adopted together with a retractor pre-tensioner and force limiter.
- In addition, the lap pre-tensioner is adopted on the front passenger seat side to improve safety.
- Adjustable seat belt shoulder anchor provide the most suitable belt fitting.

Rear seat belt

- The 3-point seat belt with ELR has been adopted.
- In addition, the retractor pre-tensioner is adopted for the left and right seats to improve safety.

Seat belt warning lamp

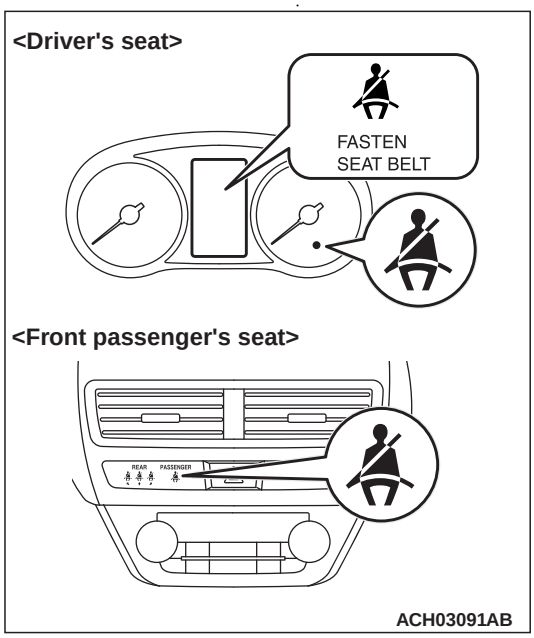

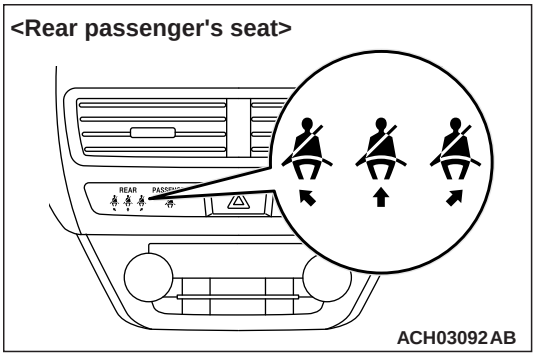

A warning lamp is set to all seats to encourage passengers to wear seatbelts.For further details on seat belt warning lamp.

7.1.2. Condition of safety-belts/buckles.

M6160100200012

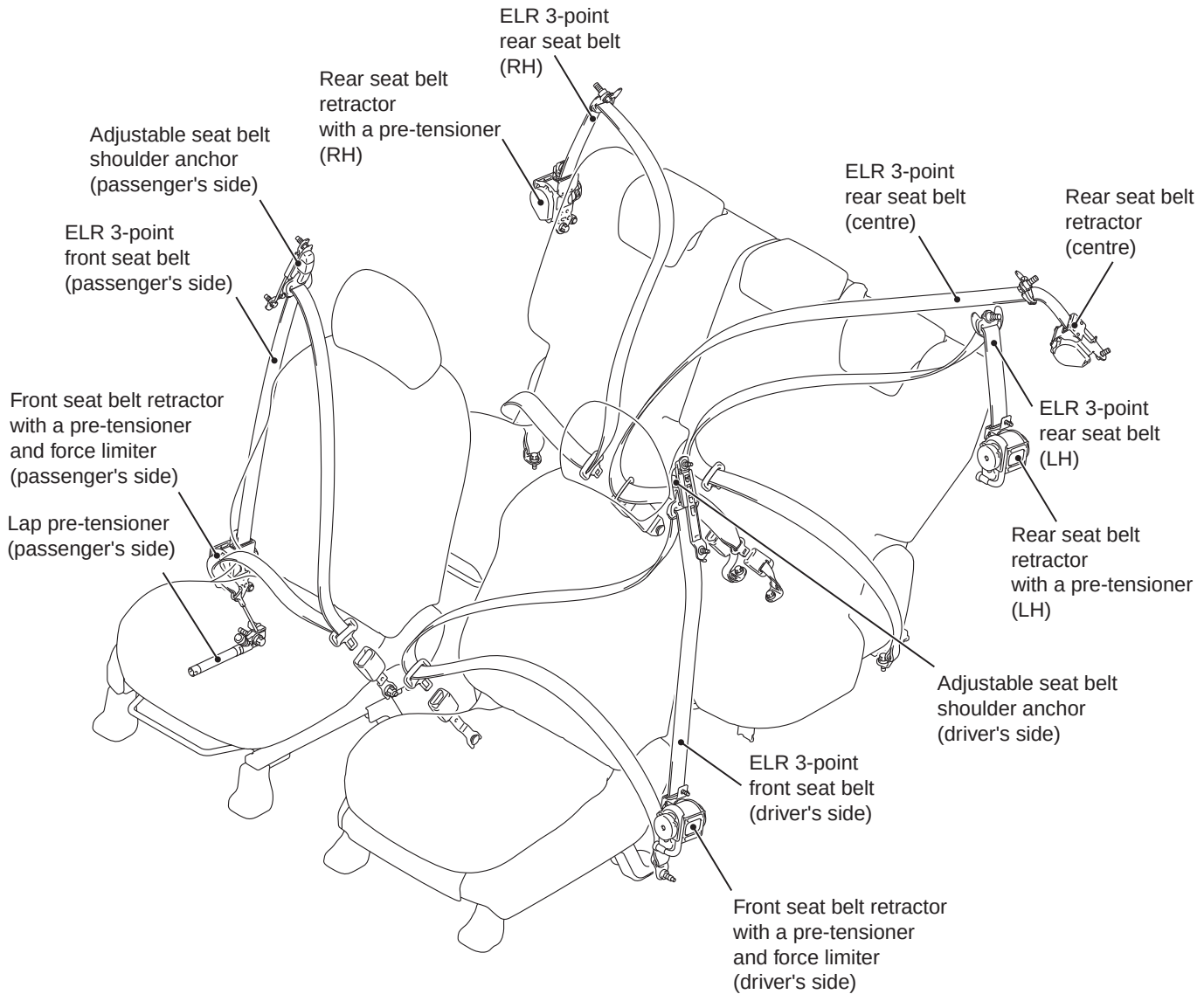

ACH02939AB

- By making the buckles of all the seats free-standing, you can wear the seat belts more comfortably.

Front seat belt

- The 3-point seat belt with ELR has been adopted together with a retractor pre-tensioner and force limiter.
- In addition, the lap pre-tensioner is adopted on the front passenger seat side to improve safety.
- Adjustable seat belt shoulder anchor provide the most suitable belt fitting.

Rear seat belt

- The 3-point seat belt with ELR has been adopted.
- In addition, the retractor pre-tensioner is adopted for the left and right seats to improve safety.

Seat belt warning lamp

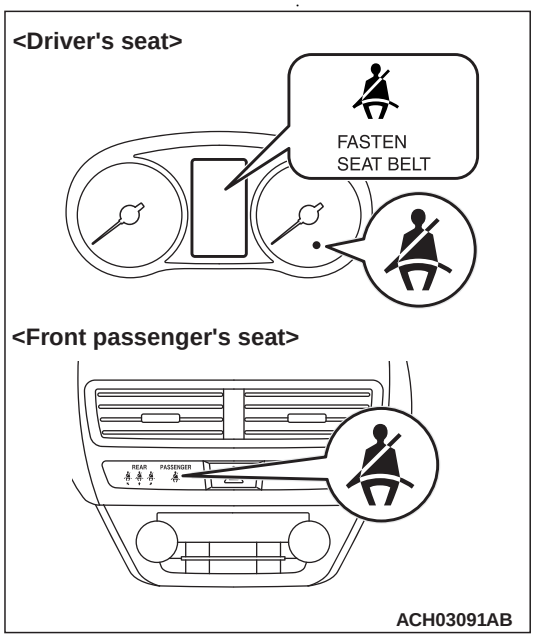

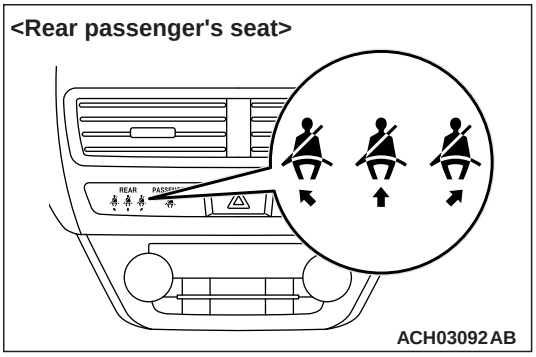

A warning lamp is set to all seats to encourage passengers to wear seatbelts.For further details on seat belt warning lamp.

7.1.3. Safety belt load limiter

M6160100300019

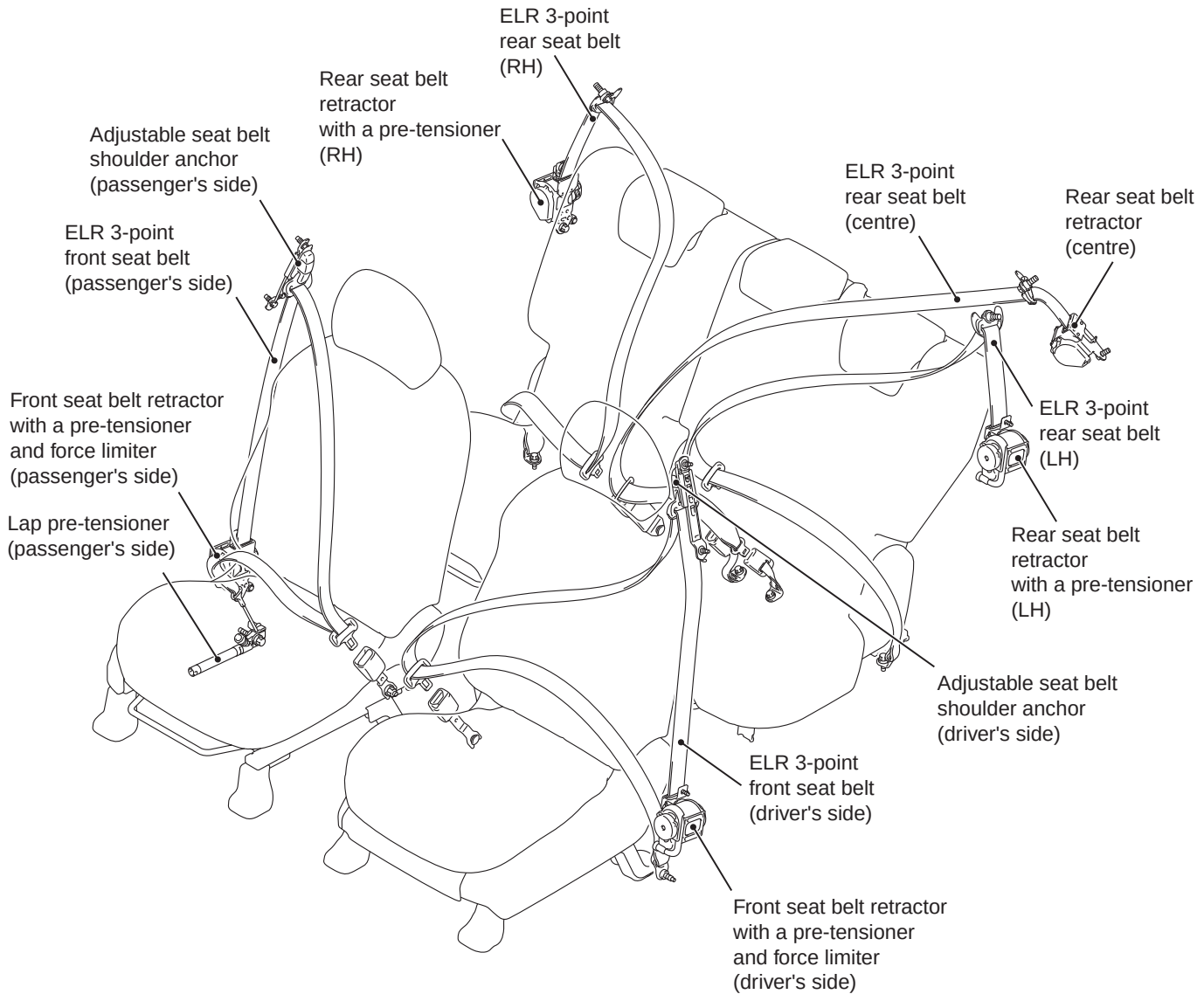

ACH02939AB

- By making the buckles of all the seats free-standing, you can wear the seat belts more comfortably.

Front seat belt

- The 3-point seat belt with ELR has been adopted together with a retractor pre-tensioner and force limiter.
- In addition, the lap pre-tensioner is adopted on the front passenger seat side to improve safety.
- Adjustable seat belt shoulder anchor provide the most suitable belt fitting.

Rear seat belt

- The 3-point seat belt with ELR has been adopted.
- In addition, the retractor pre-tensioner is adopted for the left and right seats to improve safety.

Seat belt warning lamp

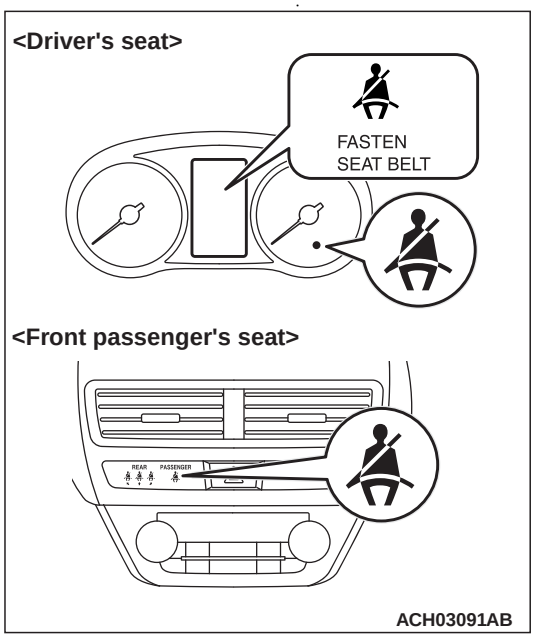

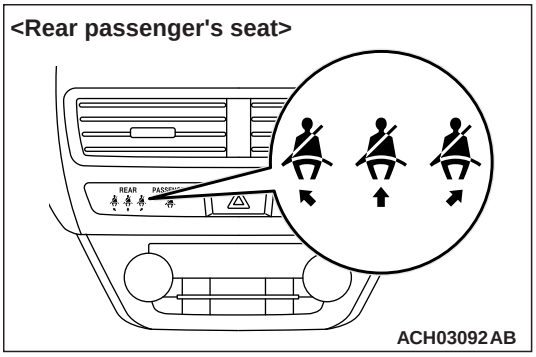

A warning lamp is set to all seats to encourage passengers to wear seatbelts.For further details on seat belt warning lamp.

7.1.4. Safety belt Pre-tensioners

M6160100400016

- To provide a better safety upon impact, the driver's and front passenger's air bags have been installed to all vehicles as standard. Furthermore, the driver's knee airbag, the side-airbags or the curtain airbags have been installed as standard equipment depending on model type.
- The SRS* air bag is a system that is effective with the seat belt fastened, and it is designed as a supplemental system of the seat belt.
- The driver's and front passenger's air bag are activated when an impact exceeding the threshold is applied upon a frontal collision, and the cushion air bag is instantaneously inflated to protect the head and chest areas of the front seat passengers.
- The passenger’s air bag cut off switch which can enable and disable the passenger’s (front) air bag has been equipped in the instrument panel of passenger’s side.
- The driver's knee air bag is activated when an impact exceeds the threshold upon a frontal collision, and the cushion air bag is instantaneously inflated for better protection of the driver.
- The side-airbag is activated when an impact exceeds the threshold upon a side collision, and the cushion air bag is instantaneously inflated to protect the chest area of the front seat passengers.
- The curtain air bag is activated simultaneously with the side-airbag upon a side collision to protect the heads of the front seat and second seat passengers.
- For the inflator, the gas which is harmless to the human body has been adopted.
- The seat belt pre-tensioner is installed as a standard in the front and rear seats. The pre-tensioner is activated simultaneously with the deployment of the driver's and front passenger's air bags and the driver's knee air bag in the case

of a frontal collision. Seat belts are pulled in to eliminate the slack upon a collision, thus improving the initial occupant restraint, and reducing the travel distance of the occupants. For the passenger's seat, in addition to the seat belt pre-tensioner for the shoulder side, the lap pre-tensioner has been installed on the outer seat belt lower anchor side in order to improve the restraining performance around the waist in addition to the chest area.

⚠ CAUTION

- **The SRS (Supplemental Restraint System) air bag is a system that is effective with the seat belt fastened, and it is designed as a supplemental system of the seat belt.**
- **Do not disassemble the SRS air bag components or seat belt with pre-tensioner. Also, do not apply an impact.**

*NOTE: *: SRS (Supplemental Restraint System)*

CONSTRUCTION DIAGRAM

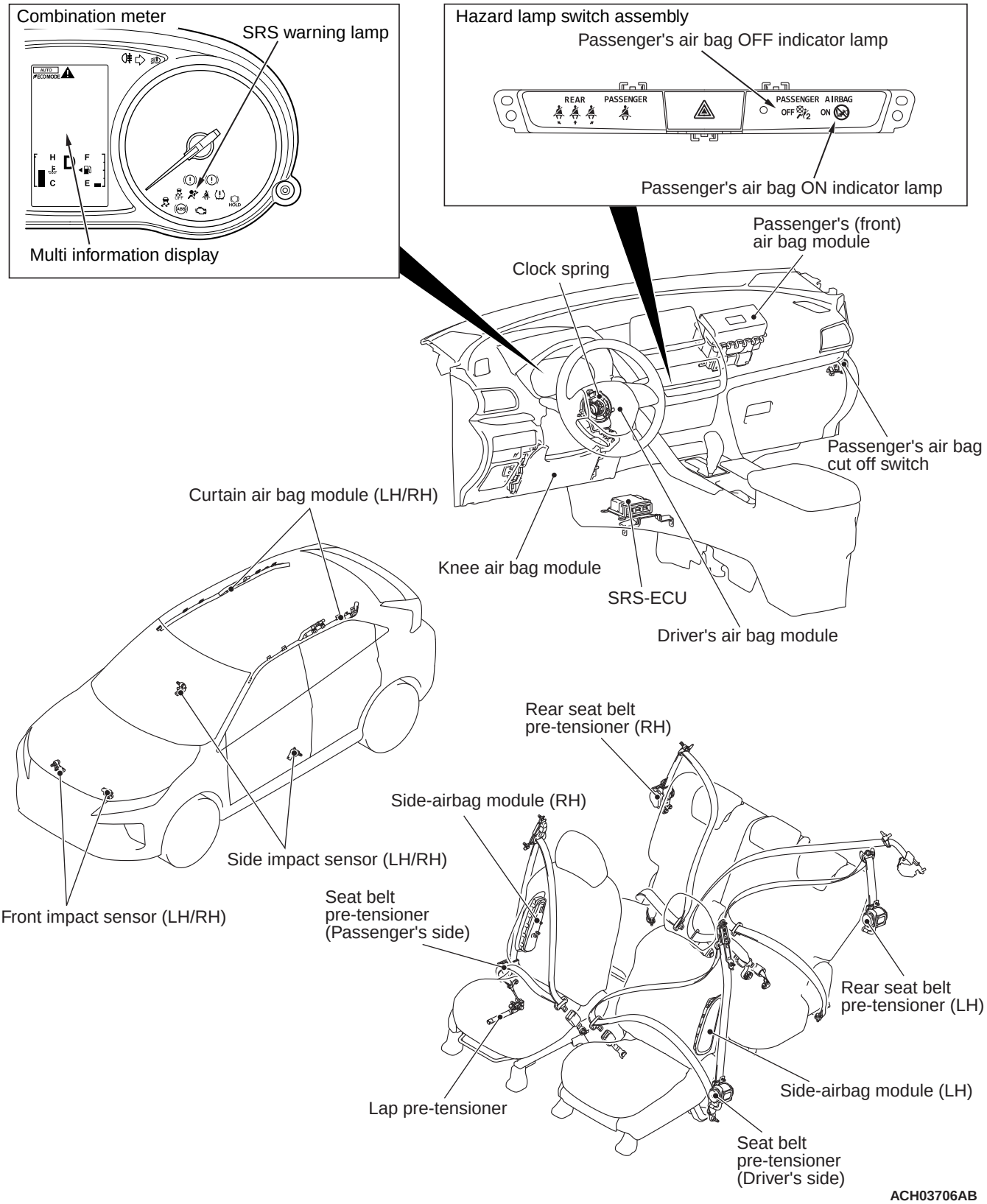

CAUTION LABELS

The labels indicating the precautions for handling and maintenance of SRS air bags and seat belt with pre-tensioner are attached to the locations shown in the figure. If the label is damaged or is dirty, replace with the new label.

Driver's air bag module

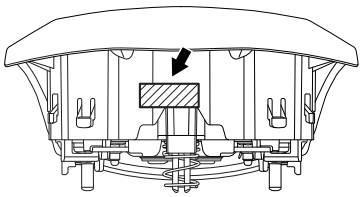

ACC02943

Passenger's (front) air bag module

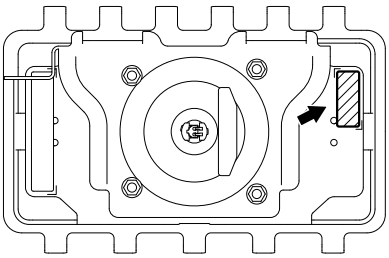

ACH03373

SRS-ECU

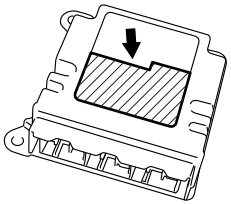

ACH02632

Sunvisor*

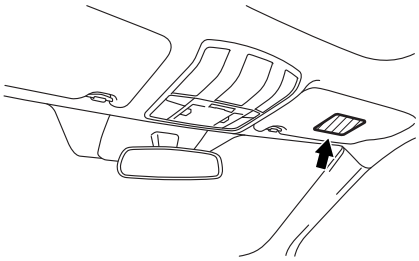

ACH01096

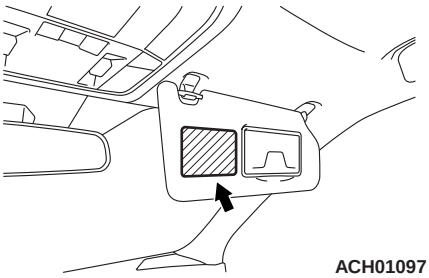

ACH01097

Seat belt pre-tensioner (Driver's side and Passenger's side)
Rear seat belt pre-tensioner (LH and RH)

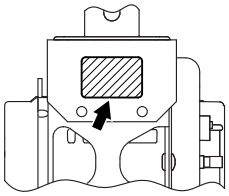

ACH03493

Lap pre-tensioner

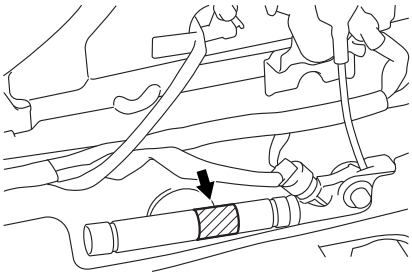

ACH03376

Side-airbag module (LH and RH)

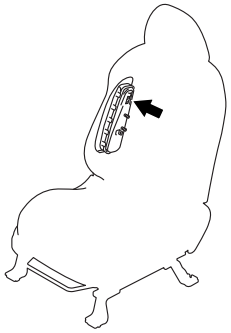

ACH03392

Knee air bag module

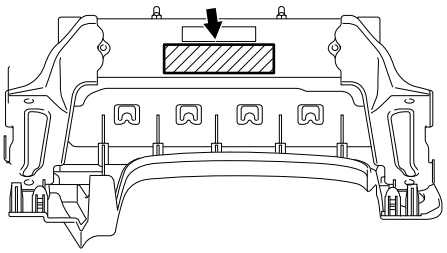

ACB05536

Curtain air bag module (LH and RH)

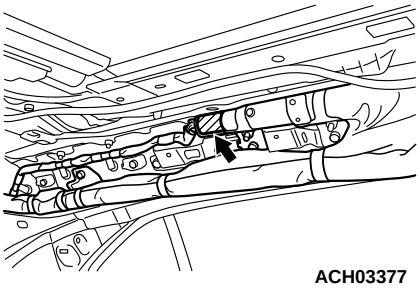

ACH03377

ACH04074AB

*NOTE: *: Indicates LHD vehicles. For RHD vehicles, the specified application position of label is reversed left to right*

SRS SYSTEM CIRCUIT DIAGRAM

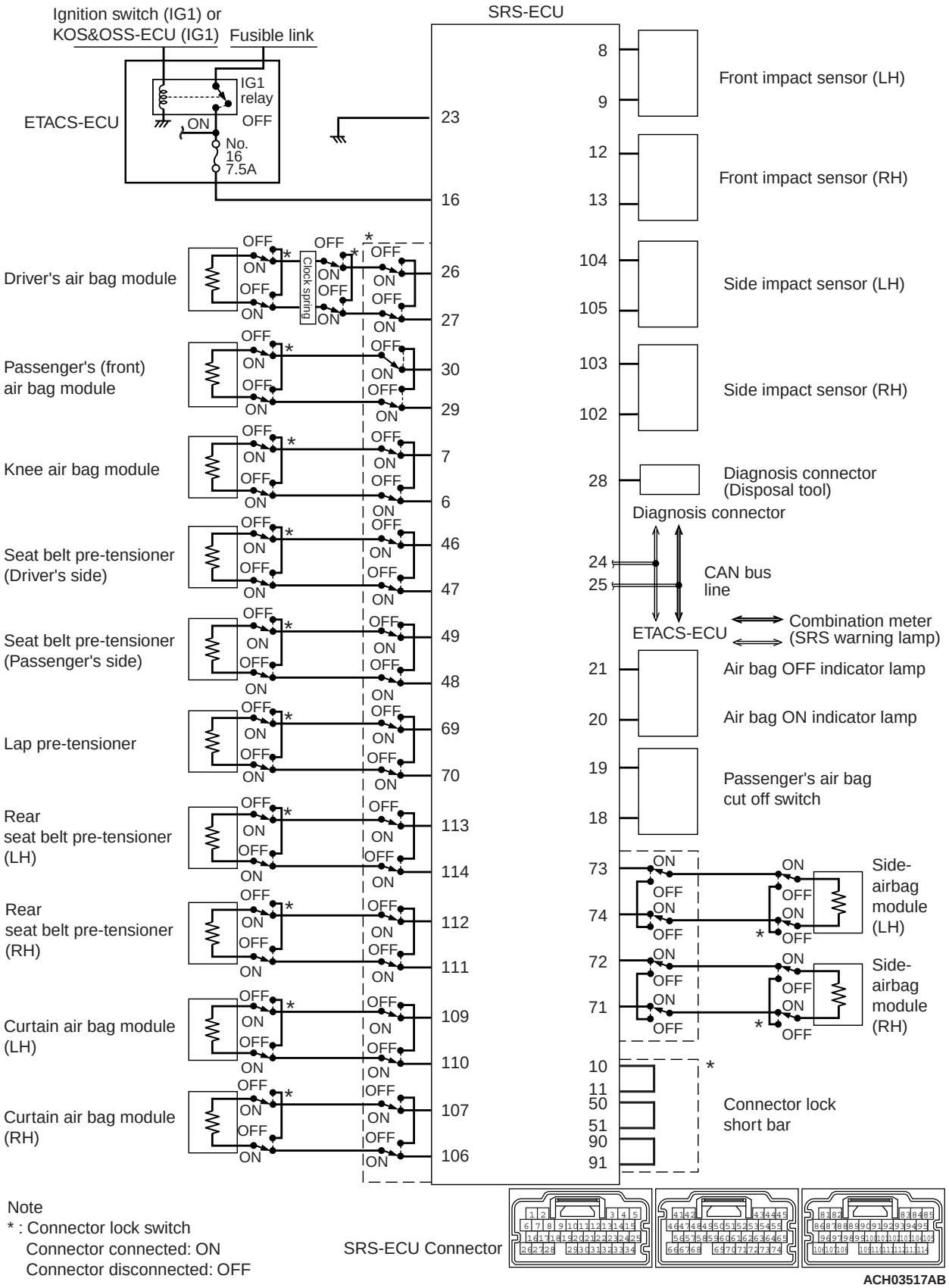

Note
* : Connector lock switch
Connector connected: ON
Connector disconnected: OFF

ACH03517AB

Number in system circuit diagram	Circuit name	Universal harness Wire size and colour
6	Knee air bag squib (-)	L
7	Knee air bag squib (+)	R
8	Front impact sensor (LH) (+)	W
9	Front impact sensor (LH) (-)	Y
12	Front impact sensor (RH) (+)	G
13	Front impact sensor (RH) (-)	LG
16	Ignition switch (IG1) <Vehicles without KOS> or KOS&OSS-ECU (IG1) <Vehicles with KOS> power supply (fuse No. 16)	Y
18	Passenger's air bag cut off switch (+)	G
19	Passenger's air bag cut off switch (-)	L
20	Passenger's air bag ON indicator lamp	V
21	Passenger’s air bag OFF indicator lamp	BR
23	Earth	B
24	CAN-C_L	G
25	CAN-C_H	L
26	Driver's air bag squib (+)	G
27	Driver's air bag squib (-)	GR
28	Diagnosis connector (Disposal tool)	LG
29	Passenger's (front) air bag squib (+)	P
30	Passenger's (front) air bag squib (-)	LG
46	Seat belt pre-tensioner squib (Driver's side) (+)	BR
47	Seat belt pre-tensioner squib (Driver's side) (-)	Y
48	Seat belt pre-tensioner squib (Front passenger's side) (-)	B
49	Seat belt pre-tensioner squib (Front passenger's side) (+)	W
69	Lap pre-tensioner squib (+)	R
70	Lap pre-tensioner squib (-)	G
71	Side-airbag squib (RH) (-)	GR
72	Side-airbag squib (RH) (+)	L
73	Side-airbag squib (LH) (+)	V
74	Side-airbag squib (LH) (-)	P
102	Side impact sensor (RH) (+)	V
103	Side impact sensor (RH) (-)	LG
104	Side impact sensor (LH) (+)	G
105	Side impact sensor (LH) (-)	R
106	Curtain air bag squib (RH) (-)	G
107	Curtain air bag squib (RH) (+)	R
109	Curtain air bag squib (LH) (+)	Y
110	Curtain air bag squib (LH) (-)	BR

Number in system circuit diagram	Circuit name	Universal harness Wire size and colour
111	Rear seat belt pre-tensioner squib (RH) (-)	P
112	Rear seat belt pre-tensioner squib (RH) (+)	Y
113	Rear seat belt pre-tensioner squib (LH) (+)	SB
114	Rear seat belt pre-tensioner squib (LH) (-)	B

NOTE: For how to read the harness wire diameter and wire colour, refer to the Electrical Wiring Diagram.

7.1.5. Airbag

M6160100500013

- To provide a better safety upon impact, the driver's and front passenger's air bags have been installed to all vehicles as standard. Furthermore, the driver's knee airbag, the side-airbags or the curtain airbags have been installed as standard equipment depending on model type.
- The SRS* air bag is a system that is effective with the seat belt fastened, and it is designed as a supplemental system of the seat belt.
- The driver's and front passenger's air bag are activated when an impact exceeding the threshold is applied upon a frontal collision, and the cushion air bag is instantaneously inflated to protect the head and chest areas of the front seat passengers.
- The passenger’s air bag cut off switch which can enable and disable the passenger’s (front) air bag has been equipped in the instrument panel of passenger’s side.
- The driver's knee air bag is activated when an impact exceeds the threshold upon a frontal collision, and the cushion air bag is instantaneously inflated for better protection of the driver.
- The side-airbag is activated when an impact exceeds the threshold upon a side collision, and the cushion air bag is instantaneously inflated to protect the chest area of the front seat passengers.
- The curtain air bag is activated simultaneously with the side-airbag upon a side collision to protect the heads of the front seat and second seat passengers.
- For the inflator, the gas which is harmless to the human body has been adopted.
- The seat belt pre-tensioner is installed as a standard in the front and rear seats. The pre-tensioner is activated simultaneously with the deployment of the driver's and front passenger's air bags and the driver's knee air bag in the case of a frontal collision. Seat belts are pulled in to eliminate the slack upon a collision, thus improving the initial occupant restraint, and reducing the travel distance of the occupants. For the passenger's seat, in addition to the seat belt pre-tensioner for the shoulder side, the lap pre-tensioner has been installed on the outer seat belt lower anchor side in order to improve the restraining performance around the waist in addition to the chest area.

⚠ CAUTION

- **The SRS (Supplemental Restraint System) air bag is a system that is effective with the seat belt fastened, and it is designed as a supplemental system of the seat belt.**
- **Do not disassemble the SRS air bag components or seat belt with pre-tensioner. Also, do not apply an impact.**

*NOTE: *: SRS (Supplemental Restraint System)*

CONSTRUCTION DIAGRAM

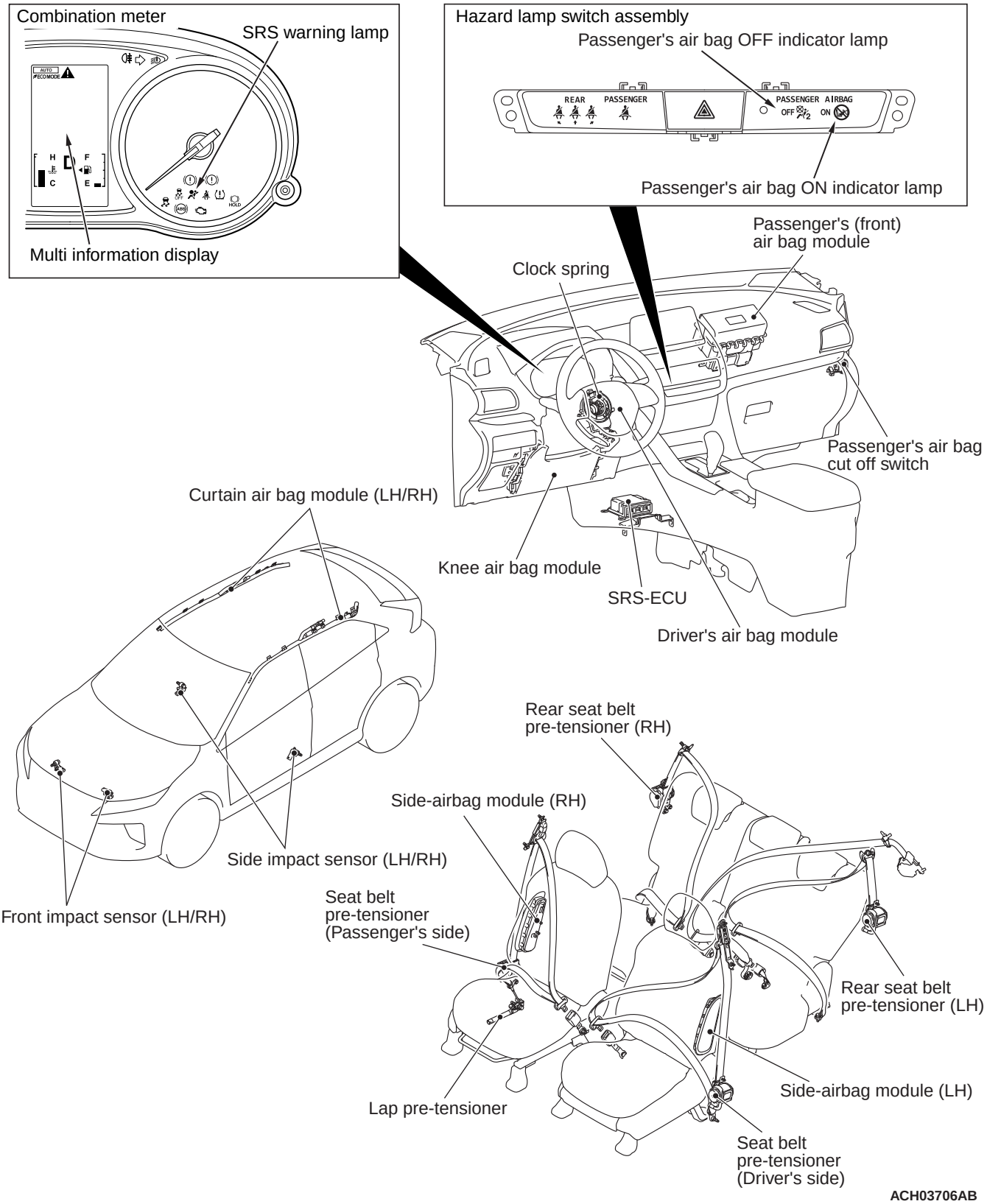

CAUTION LABELS

The labels indicating the precautions for handling and maintenance of SRS air bags and seat belt with pre-tensioner are attached to the locations shown in the figure. If the label is damaged or is dirty, replace with the new label.

Driver's air bag module

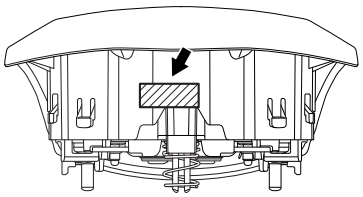

ACC02943

Passenger's (front) air bag module

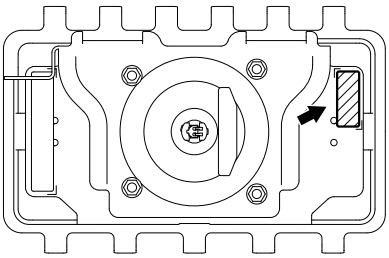

ACH03373

SRS-ECU

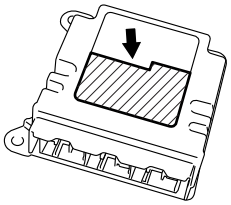

ACH02632

Sunvisor*

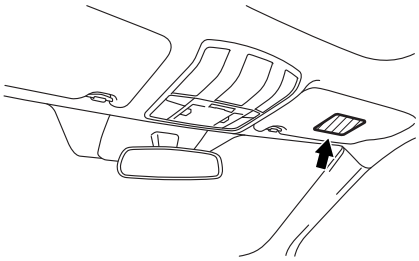

ACH01096

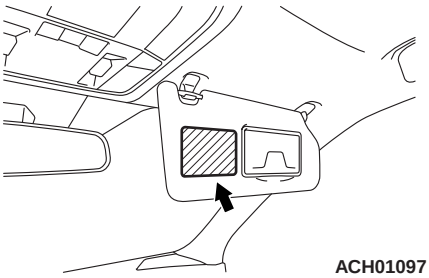

ACH01097

Seat belt pre-tensioner (Driver's side and Passenger's side) Rear seat belt pre-tensioner (LH and RH)

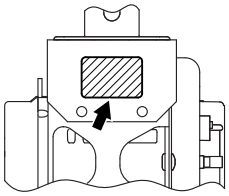

ACH03493

Lap pre-tensioner

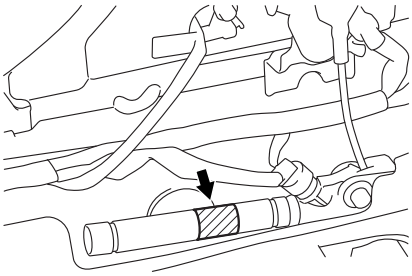

ACH03376

Side-airbag module (LH and RH)

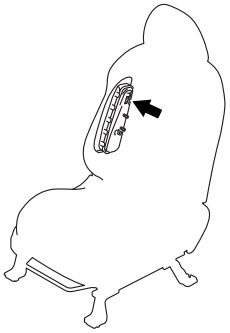

ACH03392

Knee air bag module

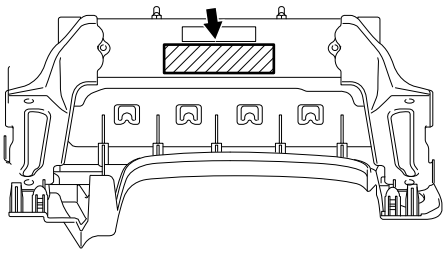

ACB05536

Curtain air bag module (LH and RH)

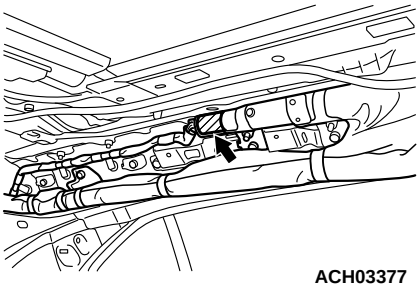

ACH03377

ACH04074AB

*NOTE: *: Indicates LHD vehicles. For RHD vehicles, the specified application position of label is reversed left to right*

SRS SYSTEM CIRCUIT DIAGRAM

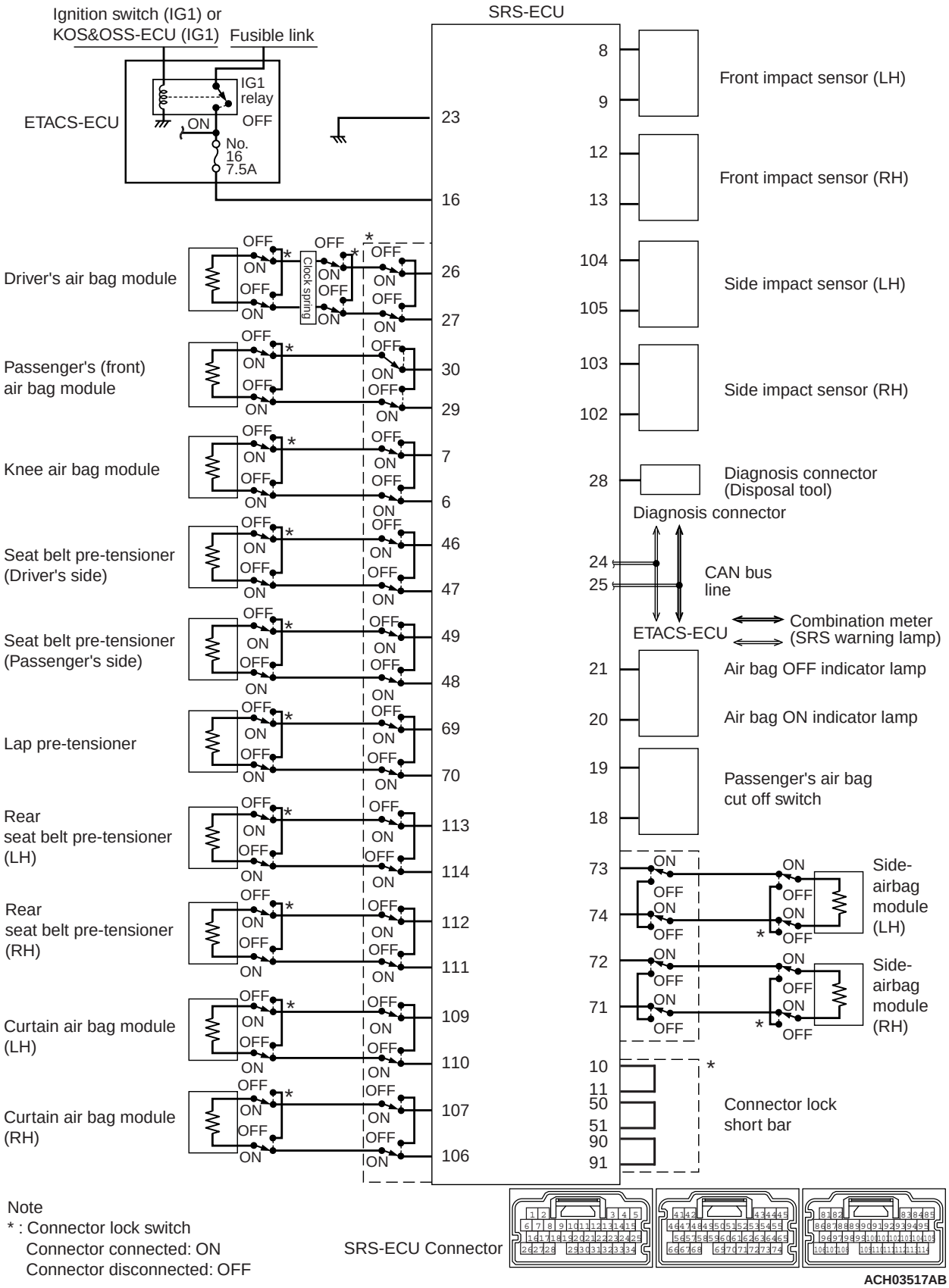

Number in system circuit diagram	Circuit name	Universal harness Wire size and colour
6	Knee air bag squib (-)	L
7	Knee air bag squib (+)	R
8	Front impact sensor (LH) (+)	W
9	Front impact sensor (LH) (-)	Y
12	Front impact sensor (RH) (+)	G
13	Front impact sensor (RH) (-)	LG
16	Ignition switch (IG1) <Vehicles without KOS> or KOS&OSS-ECU (IG1) <Vehicles with KOS> power supply (fuse No. 16)	Y
18	Passenger's air bag cut off switch (+)	G
19	Passenger's air bag cut off switch (-)	L
20	Passenger's air bag ON indicator lamp	V
21	Passenger’s air bag OFF indicator lamp	BR
23	Earth	B
24	CAN-C_L	G
25	CAN-C_H	L
26	Driver's air bag squib (+)	G
27	Driver's air bag squib (-)	GR
28	Diagnosis connector (Disposal tool)	LG
29	Passenger's (front) air bag squib (+)	P
30	Passenger's (front) air bag squib (-)	LG
46	Seat belt pre-tensioner squib (Driver's side) (+)	BR
47	Seat belt pre-tensioner squib (Driver's side) (-)	Y
48	Seat belt pre-tensioner squib (Front passenger's side) (-)	B
49	Seat belt pre-tensioner squib (Front passenger's side) (+)	W
69	Lap pre-tensioner squib (+)	R
70	Lap pre-tensioner squib (-)	G
71	Side-airbag squib (RH) (-)	GR
72	Side-airbag squib (RH) (+)	L
73	Side-airbag squib (LH) (+)	V
74	Side-airbag squib (LH) (-)	P
102	Side impact sensor (RH) (+)	V
103	Side impact sensor (RH) (-)	LG
104	Side impact sensor (LH) (+)	G
105	Side impact sensor (LH) (-)	R
106	Curtain air bag squib (RH) (-)	G
107	Curtain air bag squib (RH) (+)	R
109	Curtain air bag squib (LH) (+)	Y
110	Curtain air bag squib (LH) (-)	BR

Number in system circuit diagram	Circuit name	Universal harness Wire size and colour
111	Rear seat belt pre-tensioner squib (RH) (-)	P
112	Rear seat belt pre-tensioner squib (RH) (+)	Y
113	Rear seat belt pre-tensioner squib (LH) (+)	SB
114	Rear seat belt pre-tensioner squib (LH) (-)	B

NOTE: For how to read the harness wire diameter and wire colour, refer to the Electrical Wiring Diagram.

7.1.6. SRS Systems

M6160100600010

- To provide a better safety upon impact, the driver's and front passenger's air bags have been installed to all vehicles as standard. Furthermore, the driver's knee airbag, the side-airbags or the curtain airbags have been installed as standard equipment depending on model type.
- The SRS* air bag is a system that is effective with the seat belt fastened, and it is designed as a supplemental system of the seat belt.
- The driver's and front passenger's air bag are activated when an impact exceeding the threshold is applied upon a frontal collision, and the cushion air bag is instantaneously inflated to protect the head and chest areas of the front seat passengers.
- The passenger’s air bag cut off switch which can enable and disable the passenger’s (front) air bag has been equipped in the instrument panel of passenger’s side.
- The driver's knee air bag is activated when an impact exceeds the threshold upon a frontal collision, and the cushion air bag is instantaneously inflated for better protection of the driver.
- The side-airbag is activated when an impact exceeds the threshold upon a side collision, and the cushion air bag is instantaneously inflated to protect the chest area of the front seat passengers.
- The curtain air bag is activated simultaneously with the side-airbag upon a side collision to protect the heads of the front seat and second seat passengers.
- For the inflator, the gas which is harmless to the human body has been adopted.
- The seat belt pre-tensioner is installed as a standard in the front and rear seats. The pre-tensioner is activated simultaneously with the deployment of the driver's and front passenger's air bags and the driver's knee air bag in the case of a frontal collision. Seat belts are pulled in to eliminate the slack upon a collision, thus improving the initial occupant restraint, and reducing the travel distance of the occupants. For the passenger's seat, in addition to the seat belt pre-tensioner for the shoulder side, the lap pre-tensioner has been installed on the outer seat belt lower anchor side in order to improve the restraining performance around the waist in addition to the chest area.

⚠ CAUTION

- **The SRS (Supplemental Restraint System) air bag is a system that is effective with the seat belt fastened, and it is designed as a supplemental system of the seat belt.**
- **Do not disassemble the SRS air bag components or seat belt with pre-tensioner. Also, do not apply an impact.**

*NOTE: *: SRS (Supplemental Restraint System)*

CONSTRUCTION DIAGRAM

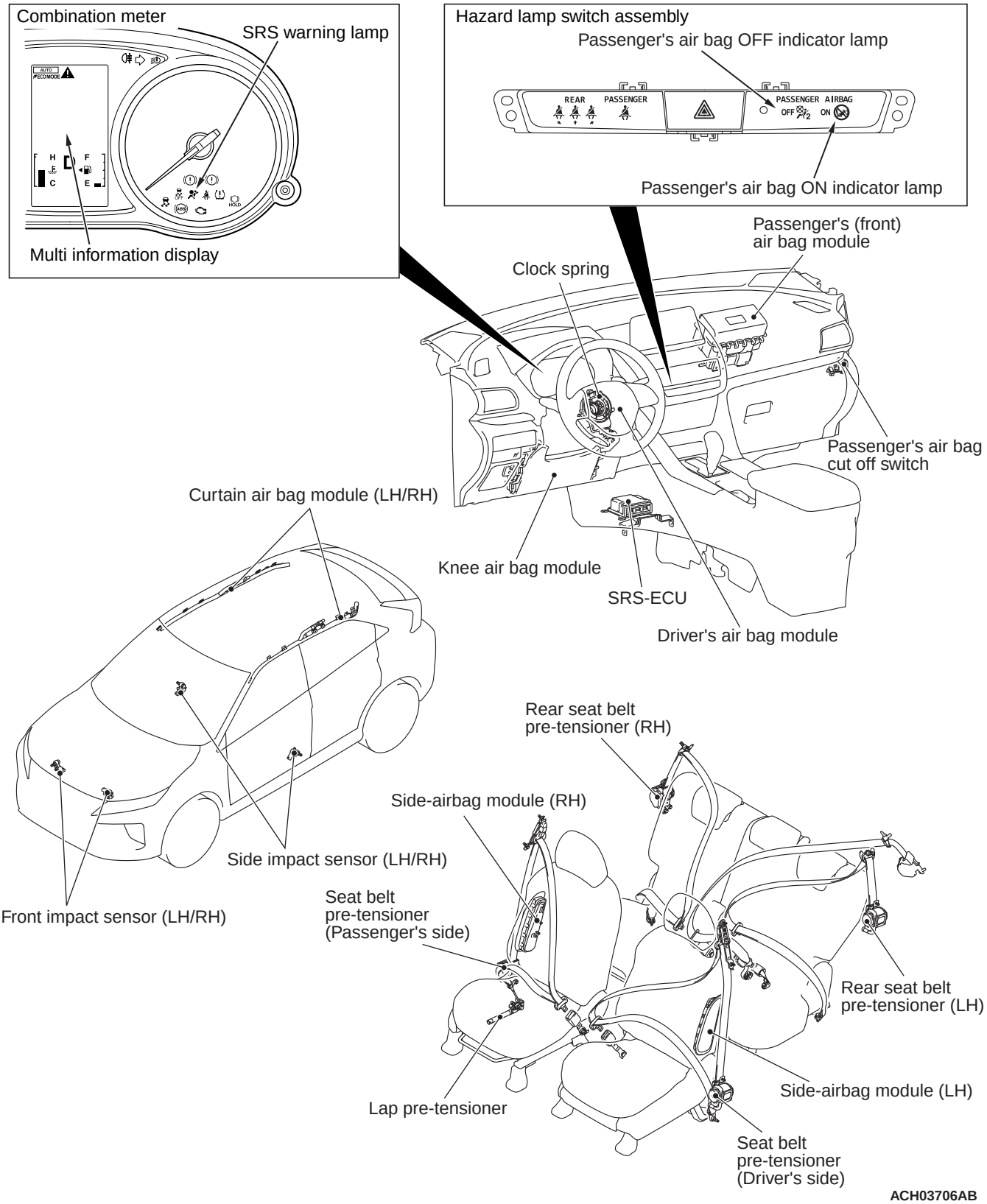

CAUTION LABELS

The labels indicating the precautions for handling and maintenance of SRS air bags and seat belt with pre-tensioner are attached to the locations shown in the figure. If the label is damaged or is dirty, replace with the new label.

Driver's air bag module

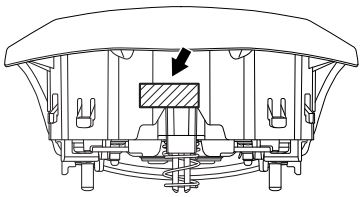

ACC02943

Passenger's (front) air bag module

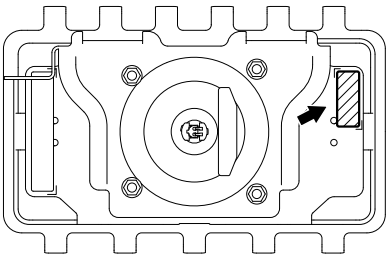

ACH03373

SRS-ECU

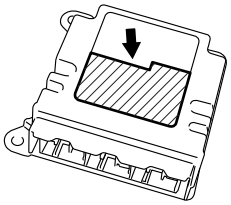

ACH02632

Sunvisor*

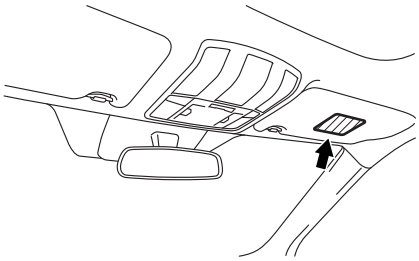

ACH01096

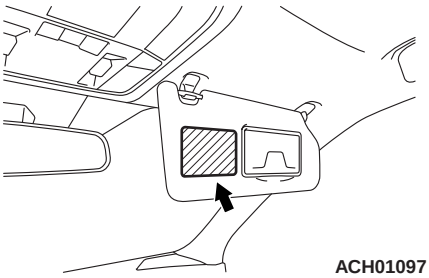

ACH01097

Seat belt pre-tensioner (Driver's side and Passenger's side)
Rear seat belt pre-tensioner (LH and RH)

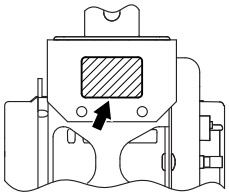

ACH03493

Lap pre-tensioner

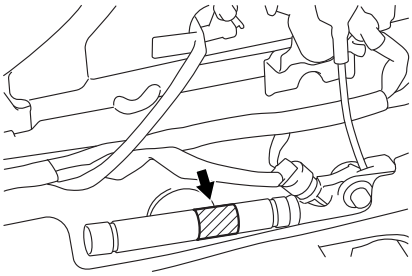

ACH03376

Side-airbag module (LH and RH)

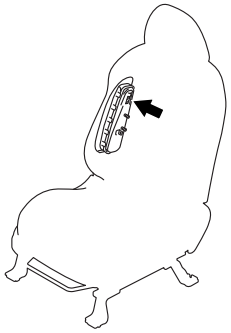

ACH03392

Knee air bag module

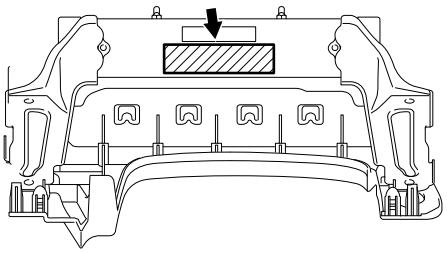

ACB05536

Curtain air bag module (LH and RH)

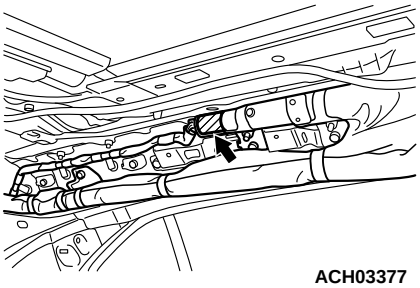

ACH03377

ACH04074AB

*NOTE: *: Indicates LHD vehicles. For RHD vehicles, the specified application position of label is reversed left to right*

SRS SYSTEM CIRCUIT DIAGRAM

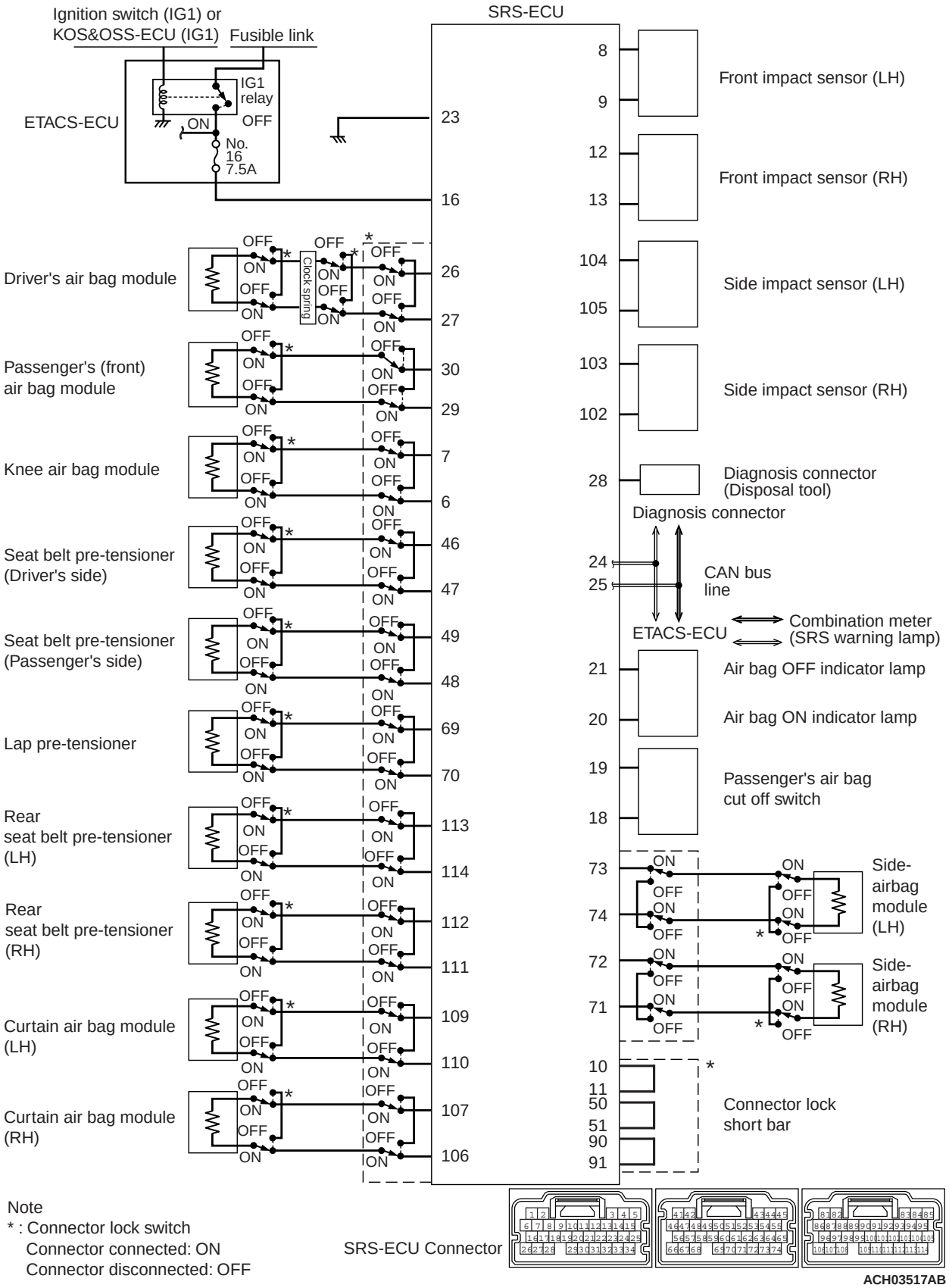

Number in system circuit diagram	Circuit name	Universal harness Wire size and colour
6	Knee air bag squib (-)	L
7	Knee air bag squib (+)	R
8	Front impact sensor (LH) (+)	W
9	Front impact sensor (LH) (-)	Y
12	Front impact sensor (RH) (+)	G
13	Front impact sensor (RH) (-)	LG
16	Ignition switch (IG1) <Vehicles without KOS> or KOS&OSS-ECU (IG1) <Vehicles with KOS> power supply (fuse No. 16)	Y
18	Passenger's air bag cut off switch (+)	G
19	Passenger's air bag cut off switch (-)	L
20	Passenger's air bag ON indicator lamp	V
21	Passenger’s air bag OFF indicator lamp	BR
23	Earth	B
24	CAN-C_L	G
25	CAN-C_H	L
26	Driver's air bag squib (+)	G
27	Driver's air bag squib (-)	GR
28	Diagnosis connector (Disposal tool)	LG
29	Passenger's (front) air bag squib (+)	P
30	Passenger's (front) air bag squib (-)	LG
46	Seat belt pre-tensioner squib (Driver's side) (+)	BR
47	Seat belt pre-tensioner squib (Driver's side) (-)	Y
48	Seat belt pre-tensioner squib (Front passenger's side) (-)	B
49	Seat belt pre-tensioner squib (Front passenger's side) (+)	W
69	Lap pre-tensioner squib (+)	R
70	Lap pre-tensioner squib (-)	G
71	Side-airbag squib (RH) (-)	GR
72	Side-airbag squib (RH) (+)	L
73	Side-airbag squib (LH) (+)	V
74	Side-airbag squib (LH) (-)	P
102	Side impact sensor (RH) (+)	V
103	Side impact sensor (RH) (-)	LG
104	Side impact sensor (LH) (+)	G
105	Side impact sensor (LH) (-)	R
106	Curtain air bag squib (RH) (-)	G
107	Curtain air bag squib (RH) (+)	R
109	Curtain air bag squib (LH) (+)	Y
110	Curtain air bag squib (LH) (-)	BR

Number in system circuit diagram	Circuit name	Universal harness Wire size and colour
111	Rear seat belt pre-tensioner squib (RH) (-)	P
112	Rear seat belt pre-tensioner squib (RH) (+)	Y
113	Rear seat belt pre-tensioner squib (LH) (+)	SB
114	Rear seat belt pre-tensioner squib (LH) (-)	B

NOTE: For how to read the harness wire diameter and wire colour, refer to the Electrical Wiring Diagram.

7.2. Fire extinguisher (X)2

M6169200000034

"Not Applicable"

7.3. Locks and anti-theft device

M6169300000019

"Not Applicable"

7.4. Warning triangle (if required) (X)2

M6169400000016

"Not Applicable"

7.5. First aid kit. (if required) (X)2

M6169500000013

"Not Applicable"

7.6. Wheel chocks (wedges) (if required) (X)2

M6169600000010

"Not Applicable"

7.7. Audible warning device

M6169700000017

"Not Applicable"

7.8. Speedometer

M6169800000014

"Not Applicable"

7.9. Tachograph (if fitted/required)

M6169900000011

"Not Applicable"

7.10. Speed limitation device (if fitted/required)

M6161100000011

"Not Applicable"

7.11 Odometer if available (X)2

M6160200000015

Visual Inspection

Check the odometer for displaying the total traveling distance of vehicle.

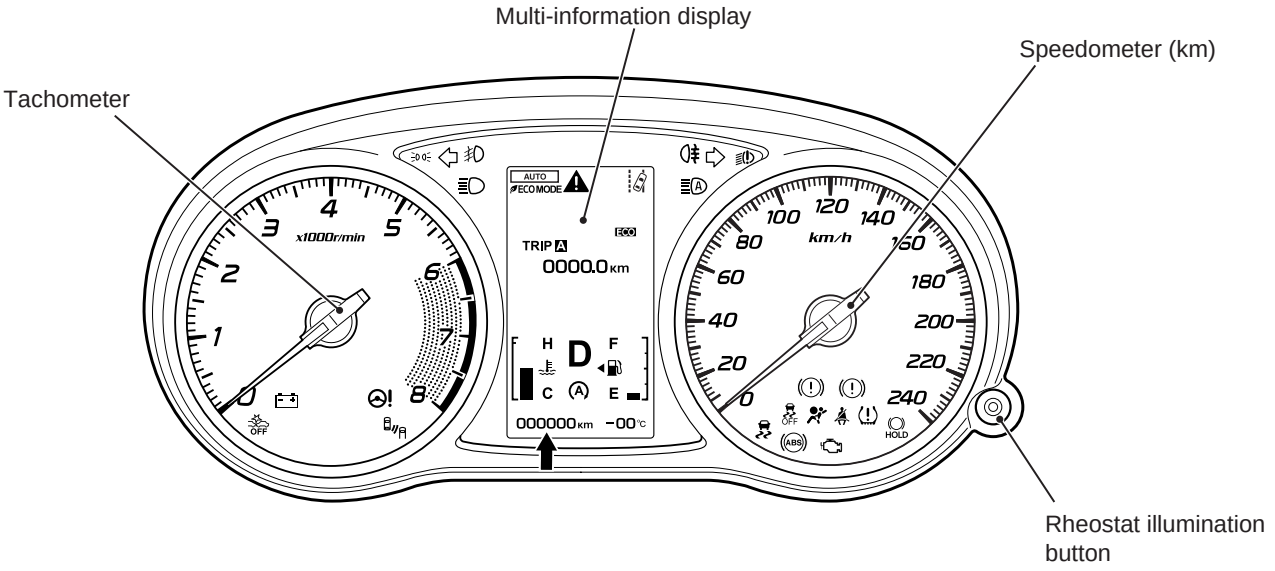

ACH02238AC

7.12 Electronic Stability Control (ESC) if fitted/required

M6161200000018

Check that ABS and brake warning lamps, ASC warning/operation lamp, brake auto hold indicator illuminate as follows.

NOTE: The brake warning lamp is used as a warning lamp for parking brake, brake fluid level, and EBD control.

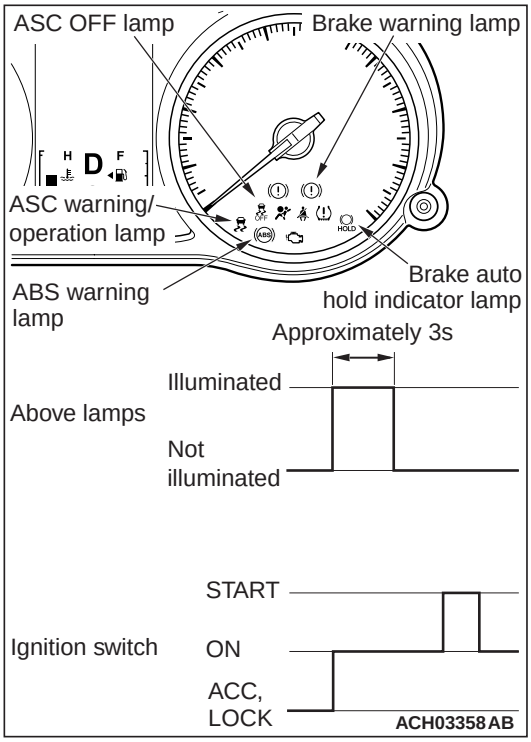

1. When the ignition switch is turned to the ON position, ABS and brake warning lamps, ASC warning/operation lamp, ASC OFF lamp or brake auto hold indicator lamp illuminate.
2. The ABS and brake warning lamps, ASC warning/operation lamp, ASC OFF lamp or brake auto hold indicator lamp illuminate for three seconds[*1] and then turn OFF[*2].
3. Otherwise, check the diagnosis code.

NOTE:

- *[*1]: The ABS warning lamp, ASC warning/operation lamp, ASC OFF lamp or brake auto hold indicator lamp may stay ON until the vehicle speed reaches 10 km/h. As far as ASC-ECU sets any diagnosis code related to the wheel speed sensor malfunction or the motor malfunction as past trouble, ASC-ECU continues illuminating the ABS warning lamp until it verifies that the malfunction for that code is resolved (startup check).*

If the steering wheel sensor or the G and yaw rate sensor system was detected to be defective during ignition switch being ON at the last time, the ASC warning/operation lamp and the ASC OFF lamp will illuminate until the vehicle speed reaches approx. 10 km/h, then the steering wheel is turned to either right or left and then the ECU determines that the system is normal.

- *[*2]: The brake warning lamp does not turn OFF when the parking brake is applied or the brake fluid level is lowered.*

GROUP 8

NUISANCE

CONTENTS

8.1. NOISE 8-2
8.1.1 Noise suppression system 8-2

8.2. EXHAUST EMISSIONS. 8-2
8.2.1 Positive ignition engine emissions . . . 8-2
8.2.1.1 Exhaust emissions control equipment 8-2
8.2.1.2 Gaseous emissions. 8-14
8.2.2 Compression ignition engine emissions 8-16
8.2.2.1 Exhaust emission control equipment 8-16
8.2.2.2 Opacity 8-24

8.3. ELECTROMAGNETIC INTERFERENCE SUPPRESSION. 8-25

8.4. OTHER ITEMS RELATED TO THE ENVIRONMENT 8-26
8.4.1. Fluid leaks 8-26

8.1. Noise

8.1.1 Noise suppression system

M6170100100016

“Query raised for this content”

8.2. Exhaust emissions

8.2.1 Positive ignition engine emissions

8.2.1.1 Exhaust emissions control equipment

M6170200200032

CONSTRUCTION DIAGRAM

<2WD>

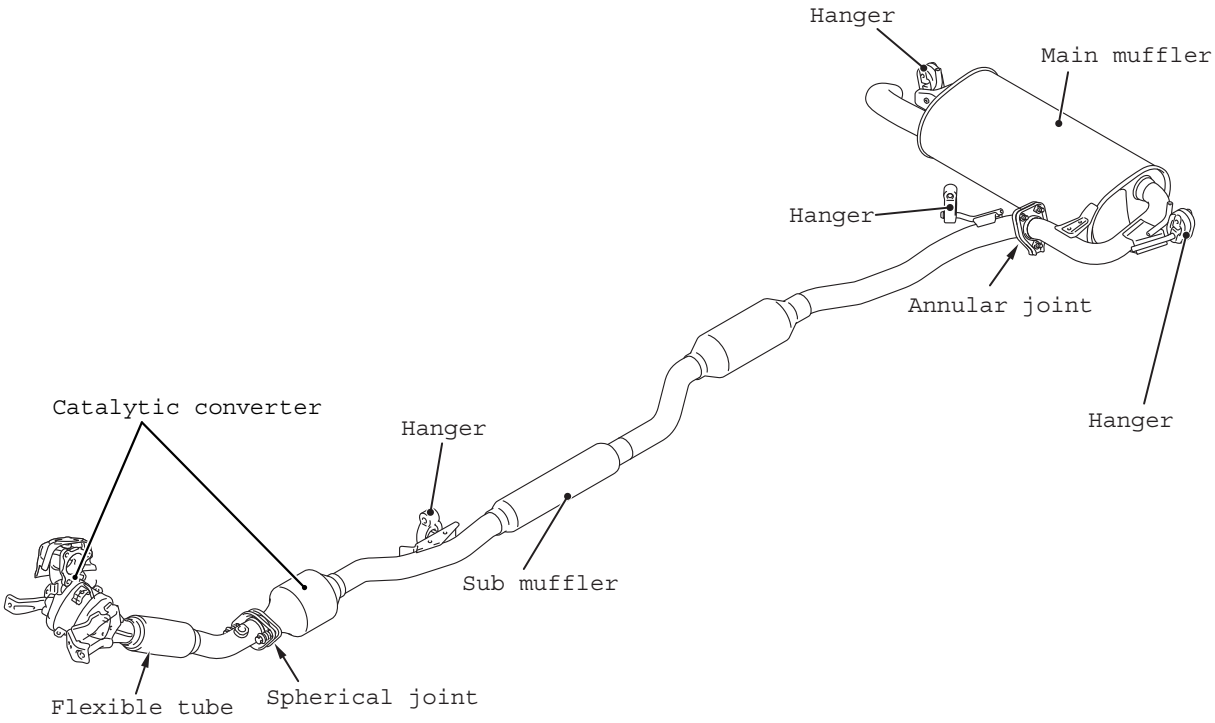

ACH01580AB

<4WD>

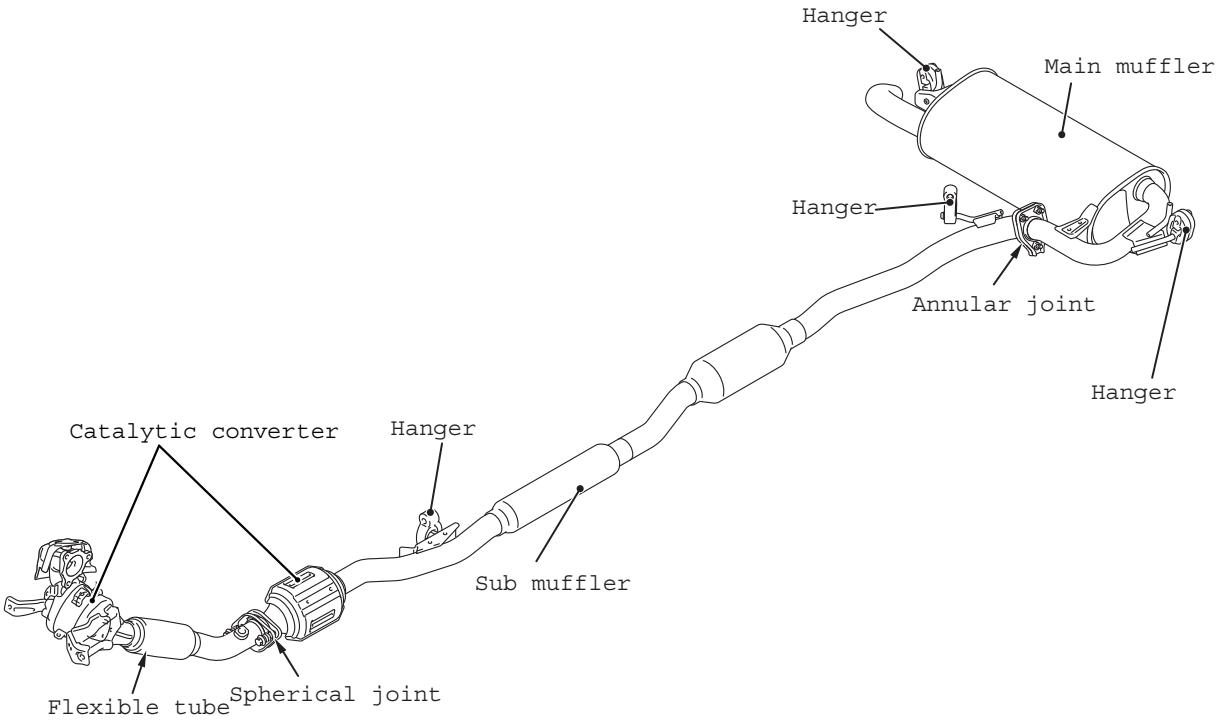

ACH01579AB

A 3-piece type of exhaust pipe and muffler which consists of the front exhaust pipe, centre exhaust pipe, and exhaust main muffler has been adopted, and has the following features:

- Due to the adoption of rear exhaust layout, the exhaust pipe length has been shortened, the exhaust gas temperature drop at engine start has been prevented, and the early-activation of catalytic converter has been accelerated, which reduces the exhaust gas.
- The large exhaust main muffler has been adopted to reduce the exhaust noise.
- The transmission of engine vibration to the car body is reduced by using a flexible tube.
- The catalytic converter is placed in front of the centre exhaust pipe to reduce exhaust gas.
- A 4-point exhaust muffler hanger has been adopted for optimisation of position, which reduces vibration to the vehicle.
- The pre-muffler is placed at two locations of the centre exhaust pipe to reduce exhaust noise.

GPF SYSTEM

Through the input signal sent from each sensor, the engine-ECU anticipates the amount of particulate matter (PM) accumulated in the GPF. Taking control of automatically regenerating the GPF under the certain condition, the engine-ECU removes the PM when the PM accumulates more than the standard. At the GPF regeneration, the GPF temperature is higher and the high temperature exhaust gas discharges.

GPF CONTROL

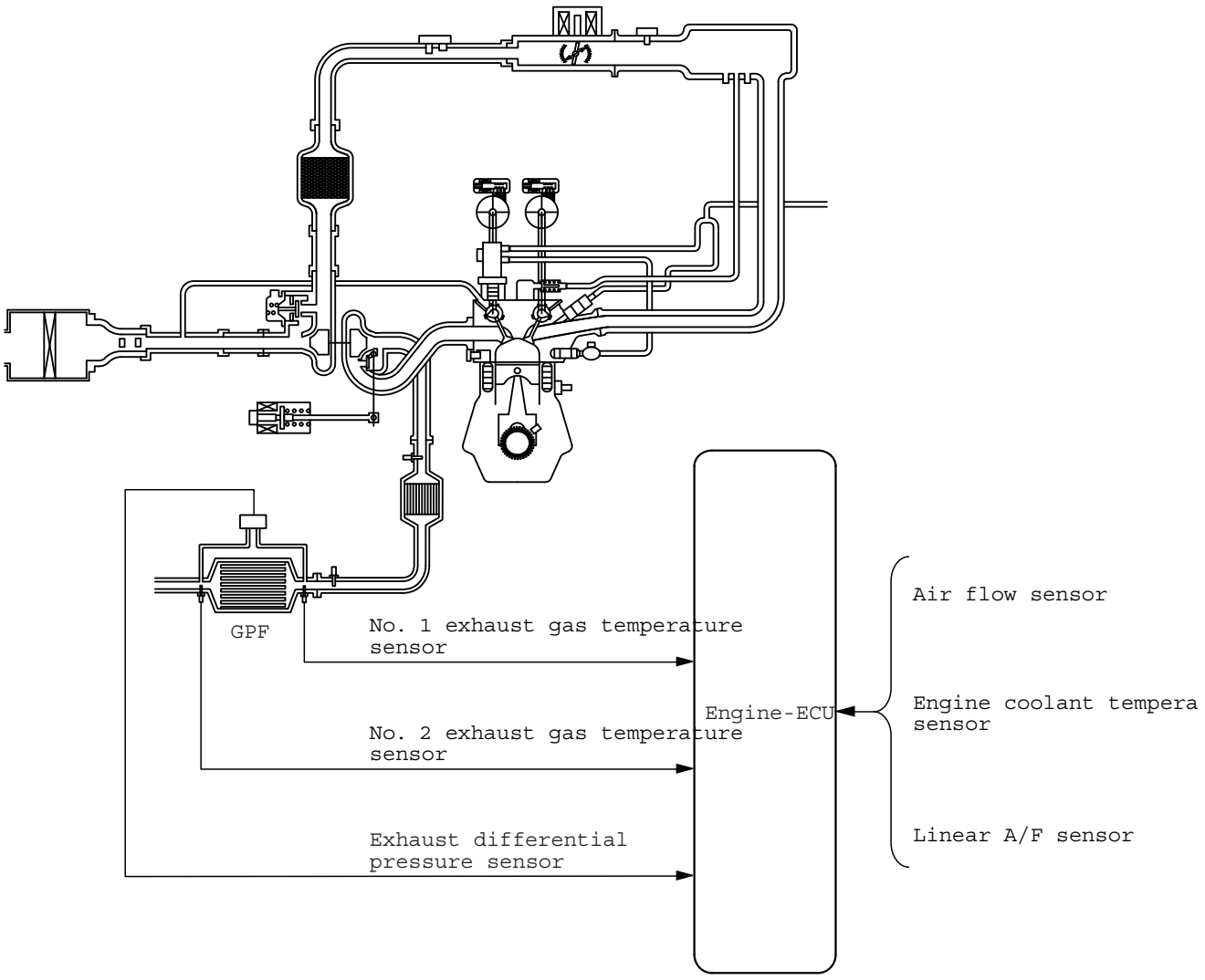

ACI00424AB

The engine-ECU is carried out the following control related to GPF.

Main control items of the GPF

Control items	Outline
PM particle number (PN) emissions calculation	The PN emissions are calculated from engine operating conditions.
Soot combustion calculation	The combustion condition of soot is calculated from the temperature and the oxygen concentration of GPF.
Accumulated soot calculation	The accumulated amount of soot is estimated from the PN emissions calculation, the soot combustion calculation, the accumulated ash calculation, the measured value of the exhaust differential pressure sensor and the filtering efficiency of GPF.
Accumulated ash calculation	The accumulated amount of ash in GPF is calculated from the accumulated soot calculation and measured value of the exhaust differential pressure sensor.
GPF protection	To prevent excessive temperature rising due to the soot combustion, fuel cut time is limited from the exhaust gas temperature and the accumulated amount of soot.
GPF temperature rising	If the exhaust gas temperature is not reached the soot combustion temperature, the ignition retard will be done to raise the exhaust gas temperature.

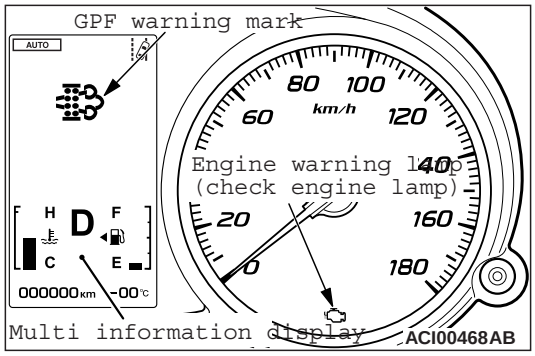

When detecting that the PM accumulates more than the standard in the GPF, the engine-ECU shows the GPF warning mark (red) on the multi information display in the combination meter. This encourages the driver to drive the vehicle under the conditions that are adequate to accomplish the GPF regeneration. If the driver does not drive the vehicle under the conditions that are adequate to accomplish the GPF regeneration although the GPF warning mark (red) is shown on the multi information display, the PM accumulation in the GPF gets higher, and then the GPF can possibly reach its clogged or damaged level. Thus, the engine-ECU shows the GPF warning mark (yellow), and illuminates the engine warning lamp to warn the driver that the vehicle must be brought to the workshop.

GPF REGENERATION CONTROL

The GPF regeneration is performed under the following conditions:

- Engine: after warm-up
- Vehicle speed: 60 km/h or more
- Amount of accumulated PM exceeds specified value.

The engine-ECU raises the GPF temperature which it can regenerate during driving, and burns the PM using oxygen supplied to the GPF due to the fuel cut at the time of releasing the accelerator pedal.

When GPF regeneration is executed from M.U.T.-IIISE, the following contents become effective.

- Releasing of the torque restriction at GPF Clogging failure and cancellation of the fuel cut limit.
- Display of soot load level, exhaust gas temperature etc. on the M.U.T.-IIISE display screen.

RISING TEMPERATURE CONTROL

The engine-ECU raises the exhaust gas temperature upstream of the GPF to about 650°C. This will raise the temperature of PM and react with oxygen supplied at the time of fuel cut and it can burn PM.

No. 1 EXHAUST GAS TEMPERATURE SENSOR, No. 2 EXHAUST GAS TEMPERATURE SENSOR

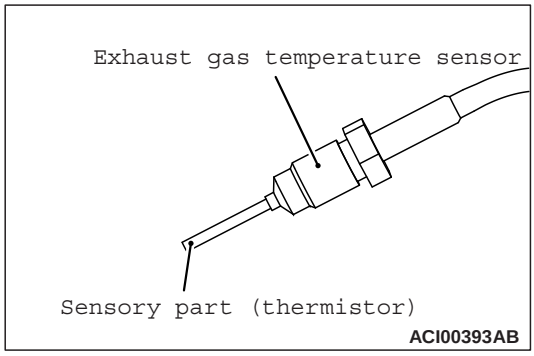

The No. 1 exhaust gas temperature sensor is installed to the upstream area of the GPF, the No. 2 exhaust gas temperature sensor is installed to the downstream area of the GPF. Each sensor detects the temperature in the each area through the change in the thermistor resistance and outputs the voltage to the engine-ECU in accordance with the temperature. The engine-ECU performs the soot combustion calculation, the GPF protection control and the GPF temperature rise control through this output voltage. The sensor characteristics are as shown in the charts.

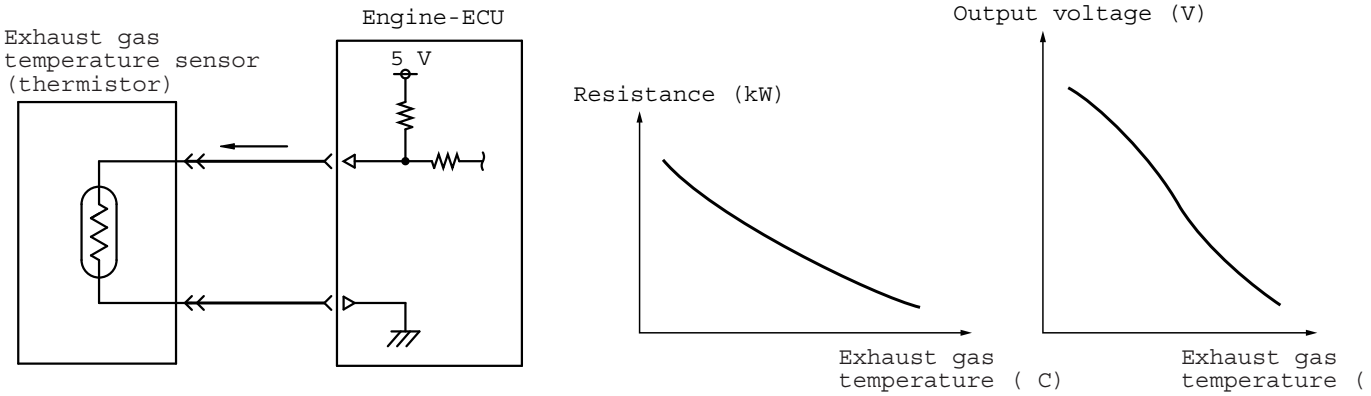

EXHAUST DIFFERENTIAL PRESSURE SENSOR

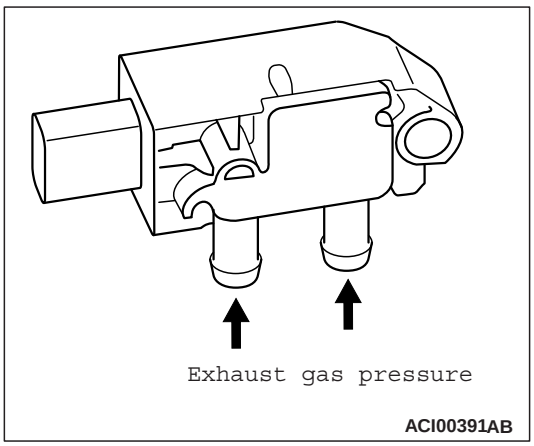

The exhaust differential pressure sensor is installed near the catalytic converter. Using the piezo resistive semiconductor, the exhaust differential pressure sensor outputs the voltage to the engine-ECU in accordance with the difference in the voltage between the GPF upstream area and the GPF downstream area. The engine-ECU performs the soot combustion calculation, the accumulated soot calculation and the accumulated amount of ash calculation through this output voltage. The sensor characteristics are as shown in the charts.

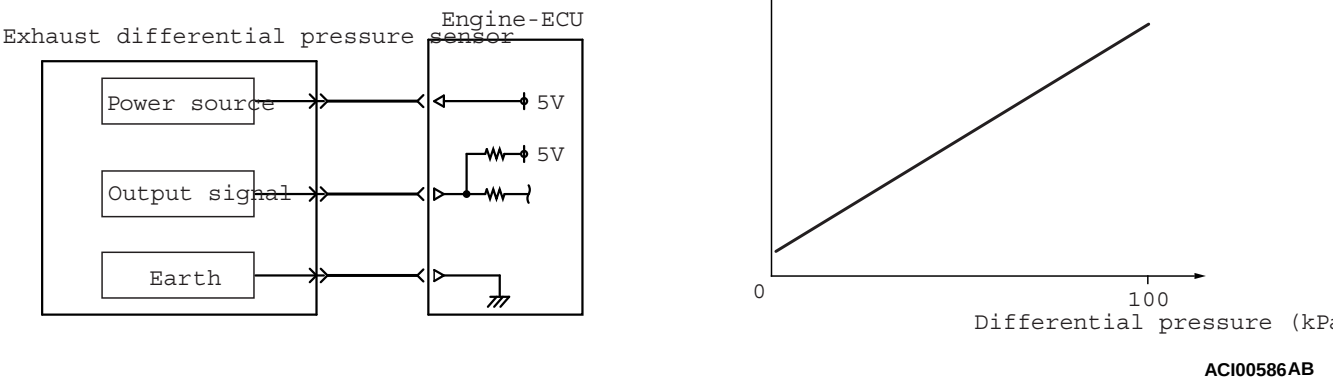

ACI00586AB

EMISSION REDUCTION SYSTEMS

These decrease CO, HC and NOx in the exhaust gases and consist of air-fuel ratio feedback control and catalytic converter.

FUEL INJECTION CONTROL

Fuel injection volume is regulated to obtain the optimum air-fuel ratio in accordance with the constant minute changes in engine driving conditions. Fuel injection volume is controlled by injector drive time (injection time). There is a prescribed basic drive time that varies according to the engine speed and intake air volume. Engine-ECU adds prescribed compensations to this basic drive time according to conditions such as the intake air temperature and engine coolant temperature to decide injection time.

1. AIR-FUEL RATIO FEEDBACK CONTROL

System Configuration Diagram

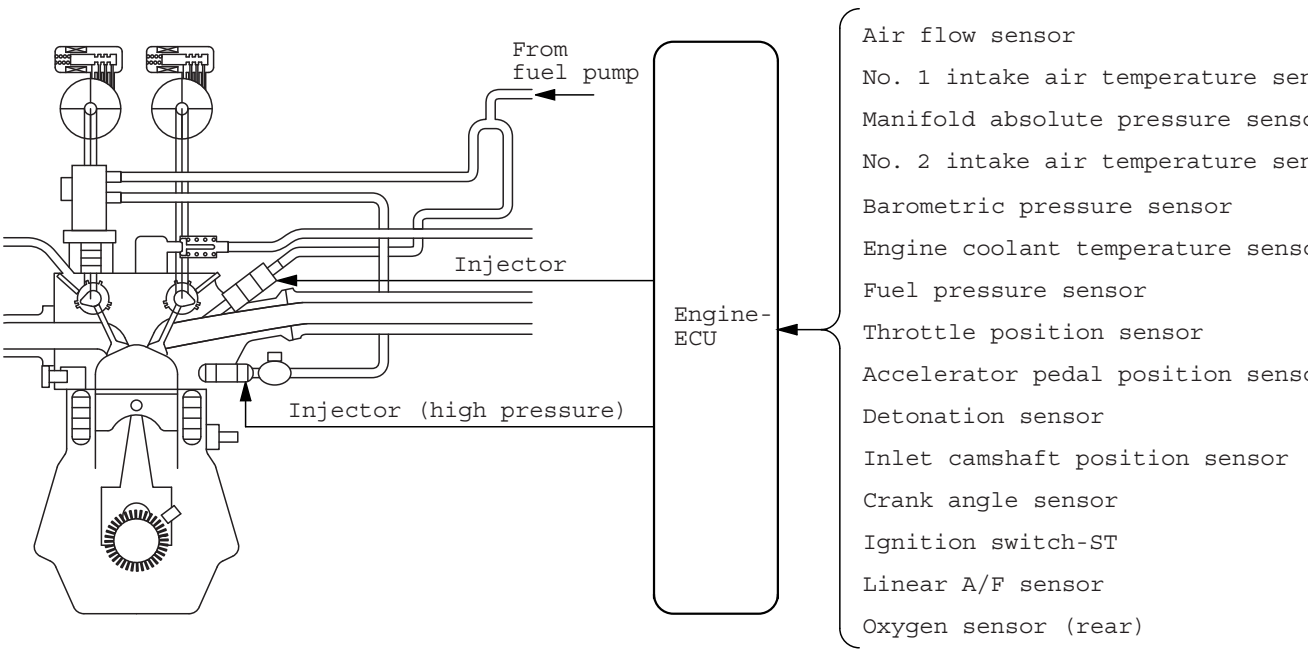

ACH00782AB

1. INJECTOR ACTUATION (FUEL INJECTION) TIMING

Injector drive time in case of direct injection and multipoint fuel injection (DI and MPI) is controlled as follows according to driving conditions.

Fuel Injection During Cranking and Normal Operation (MPI)

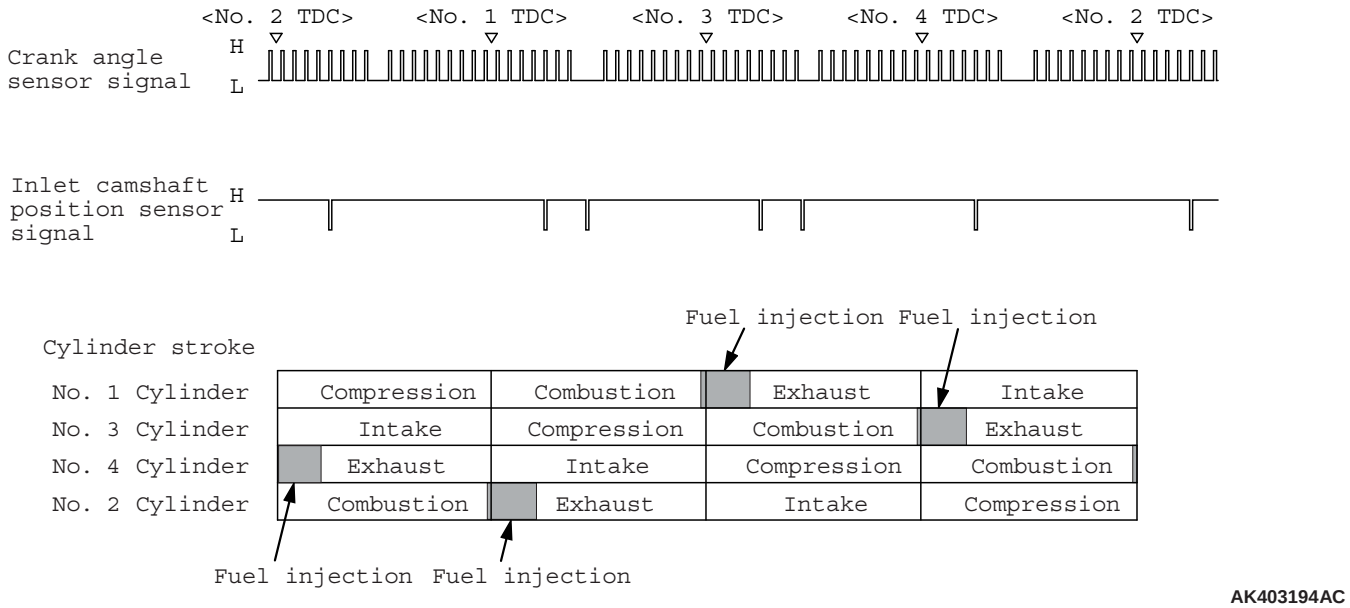

AK403194AC

Fuel Injection During Normal Operation [DI(Intake) and MPI]

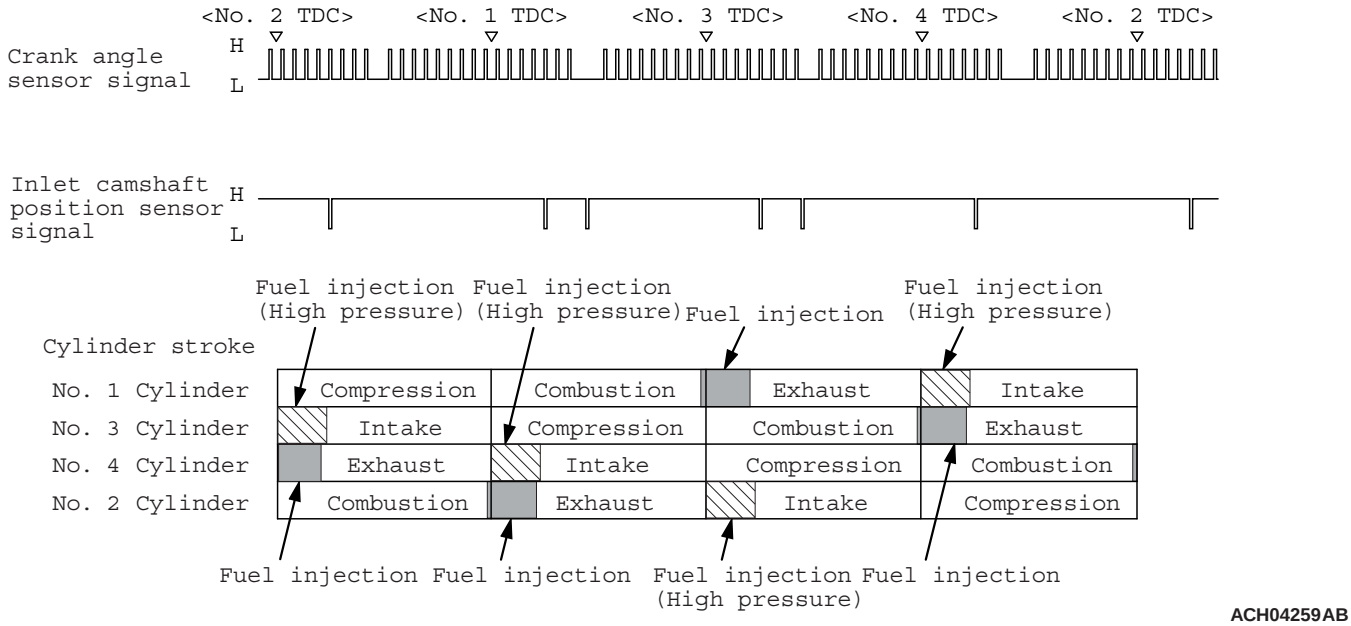

ACH04259AB

Fuel Injection During Normal Operation [DI(Intake), DI(Compression) and MPI]

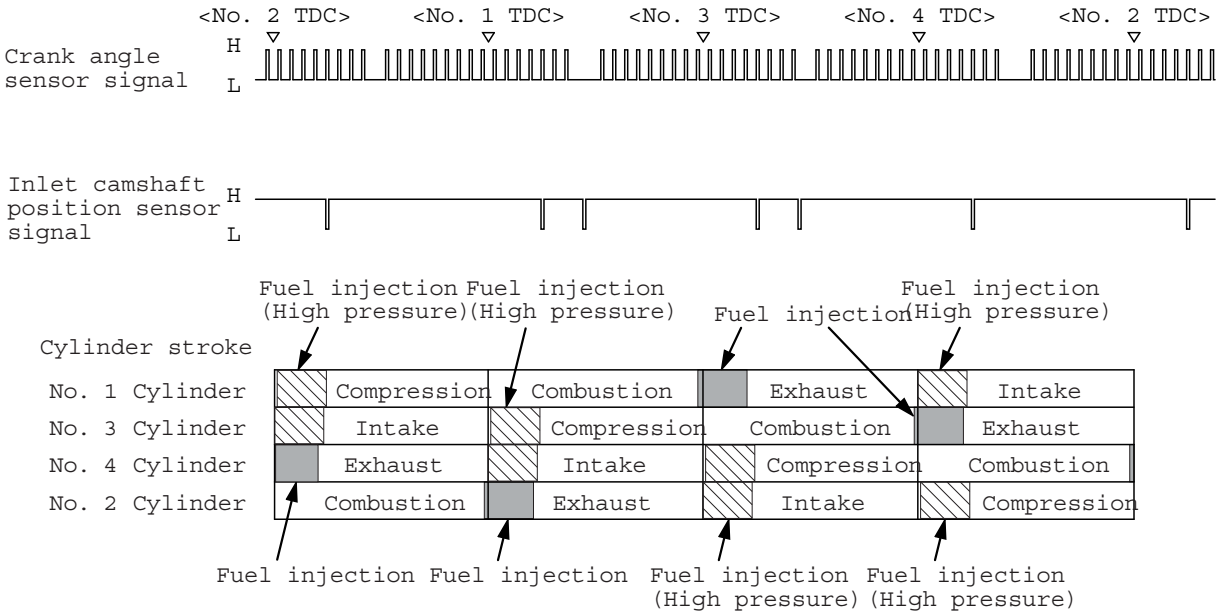

ACH04260AB

Fuel injection to each cylinder is done by driving the injector and the injector (high pressure) at optimum timing based on the crank angle sensor signal. Engine-ECU compares the crank angle sensor output pulse signal and inlet camshaft position sensor output pulse signal to identify the cylinder. Using this as a base, it performs sequential injection in the sequence of cylinders 1, 3, 4, 2. In addition, the fuel injection mode changes with driving conditions.

Additional Fuel Injection During Acceleration

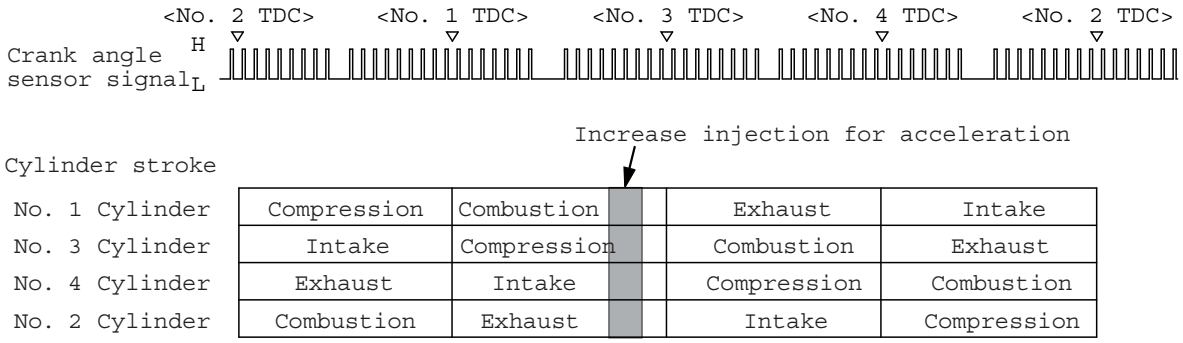

AK305293AB

In addition to the synchronising fuel injection with the crank angle sensor signal during acceleration, the volume of fuel is injected according to the extent of the acceleration.

2. Fuel injection volume (injector drive time) control

Under normal operating conditions, the figure shows the flow chart of calculating the injection amount during the injector driving time. Basic drive time is decided based on the air flow sensor signal (intake air volume signal) and crank angle sensor signal (engine rotation signal). This basic drive time is compensated according to signals from various sensors and optimum injector drive time (fuel injection volume) is calculated according to driving conditions.

Fuel Injection Volume Control Block Diagram (Normal Operation)

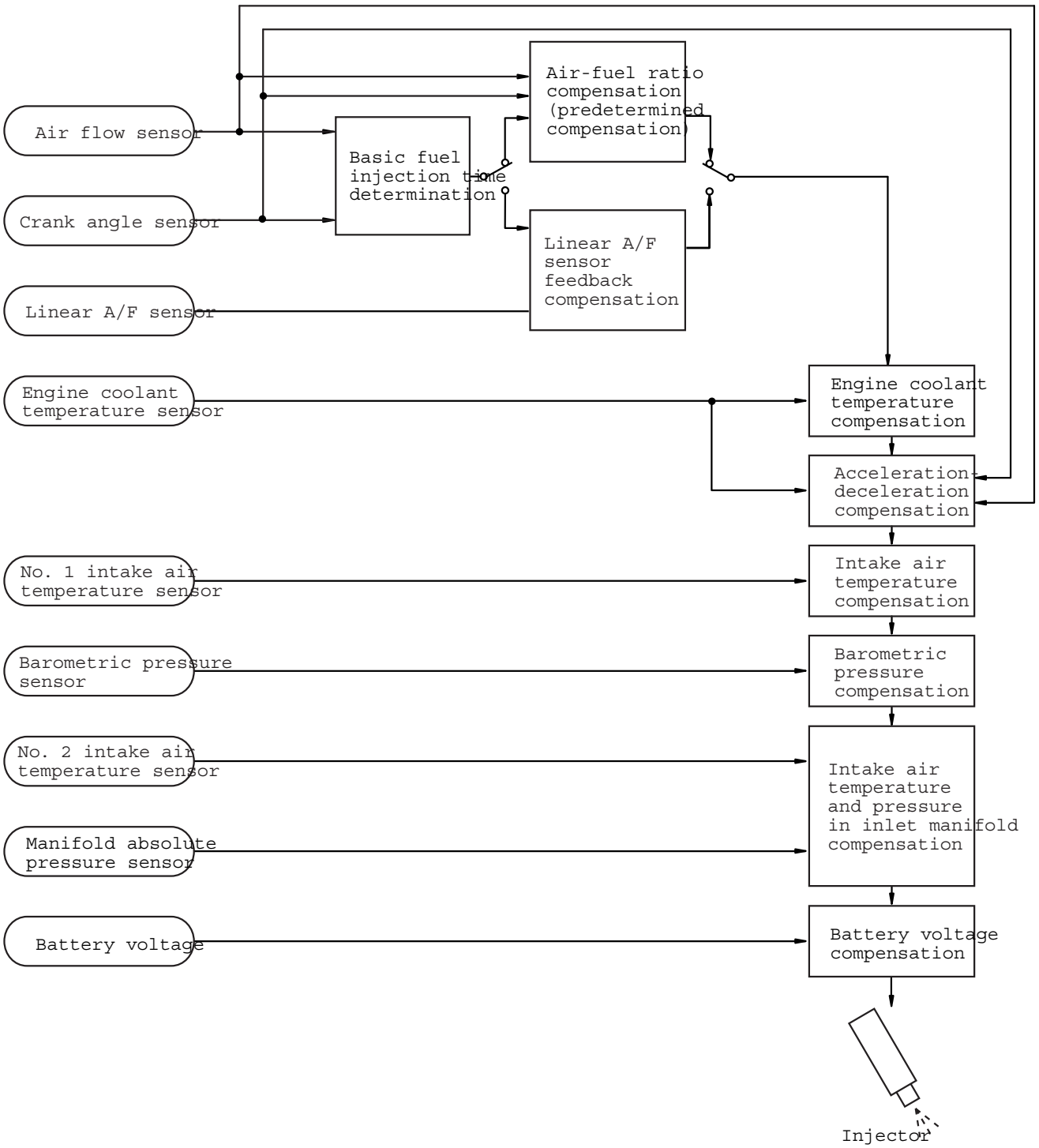

AK702858 AF

[Injector basic drive time]
Fuel injection is performed once per cycle for each cylinder. Basic drive time refers to fuel injection volume (injector drive time) to achieve theoretical air-fuel ratio for the intake air volume of 1 cycle of 1 cylinder. Fuel injection volume changes according to the pressure difference (injected fuel pressure) between manifold pressure and fuel pressure (constant). So, injected fuel pressure compensation is made to injector drive time for theoretical air-fuel ratio to arrive at basic drive time.

$$\text{Basic fuel injection time} \propto \frac{\text{Intake air amount per cycle per cylinder}}{\text{Theoretical air-fuel ratio}} \times \text{Fuel injection pressure compensation}$$

AK602279AB

Intake air volume of each cycle of 1 cylinder is calculated by engine-ECU based on the air flow sensor signal and crank angle sensor signal. Also, during engine start, the map value prescribed by the coolant temperature sensor signal is used as basic drive time.

[Injector drive time compensation]
After calculating the injector basic drive time, the engine-ECU makes the following compensations to control the optimum fuel injection volume according to driving conditions.

List of main compensations for fuel injection control

Compensations	Content
Linear A/F sensor feedback compensation	The linear A/F sensor signal is used for making the compensation to get air-fuel ratio with best cleaning efficiency of the 3-way catalytic converter. This compensation might not be made sometimes in order to improve drivability, depending on driving conditions. (Air-fuel ratio compensation is made.) The engine-ECU compensates the output signal of the linear A/F sensor using the output signal of the oxygen sensor (rear). This allows the deviation of the output signal, caused by the deterioration of the linear A/F sensor, to be solved, then the highly accurate exhaust gas control is performed.
Air-fuel ratio compensation	Under driving conditions where linear A/F sensor feedback compensation is not performed, compensation is made based on pre-set map values that vary according to engine speed and intake air volume.
Engine coolant temperature compensation	Compensation is made according to the engine coolant temperature. The lower the engine coolant temperature, the greater the fuel injection volume.
Acceleration/ Deceleration compensation	Compensation is made according to change in intake air volume. During acceleration, fuel injection volume is increased. Also, during deceleration, fuel injection volume is decreased.

Compensations	Content
Intake air temperature compensation	Compensation is made according to the intake air temperature. The lower the intake air temperature, the greater the fuel injection volume.
Barometric pressure compensation	Compensation is made according to the barometric pressure. The lower the barometric pressure, the smaller the fuel injection volume.
Battery voltage compensation	Compensation is made depending on battery voltage. The lower the battery voltage, the greater the injector drive signal time.
Intake air temperature and pressure in inlet manifold compensation	Compensation is made according to the intake air temperature and pressure in the inlet manifold.
Learning value for fuel compensation	Compensation amount is learned to compensate feedback of oxygen sensor. This allows system to compensate in accordance with engine characteristics.

[Fuel limit control during deceleration]
Engine-ECU limits fuel when decelerating downhill to prevent excessive rise of catalytic converter temperature and to improve fuel efficiency.

[Fuel-cut control when over-run]
When engine speed exceeds a prescribed limit (6,300 r/min), engine-ECU cuts fuel supply to prevent over-running and thus protect the engine.

2. CATALYTIC CONVERTER

Vehicles without GPF

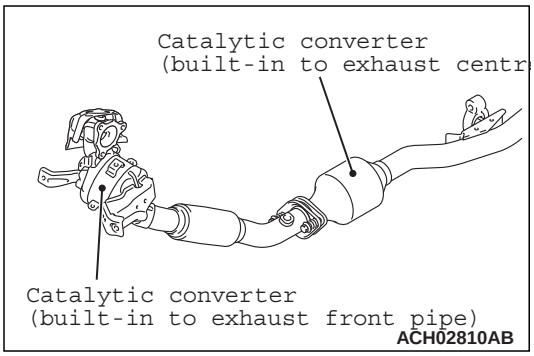

The exhaust front pipe and the exhaust centre pipe include a catalytic converter.
Based on appropriate air-fuel ratio feedback from linear A/F sensor and oxygen sensor (rear), CO and HC are oxidized and NOx is reduced. Catalytic converter is a monolith with beehive design with catalysts on the unit surface. It is protected by a thermally insulating mat and enclosed in a shell.

Vehicles with GPF

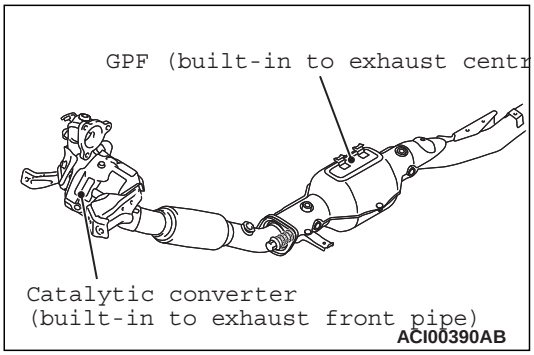

The exhaust front pipe includes a catalytic converter. Based on appropriate air-fuel ratio feedback from linear A/F sensor and oxygen sensor (rear), CO and HC are oxidized and NOx is reduced. Catalytic converter is a monolith with beehive design with catalysts on the unit surface. It is protected by a thermally insulating mat and enclosed in a shell.

8.2.1.2 Gaseous emissions

M6170200300017

PRE-INSPECTION CONDITION

"Pre-inspection condition" refers to the condition that the vehicle must be in before proper engine inspection can be carried out. If you see the words "Set the vehicle to the pre-inspection condition". In this manual, it means to set the vehicle to the following condition.

- Engine coolant temperature 80 to 90°C
- Lamps, electric cooling fan and all accessories: OFF
- M/T: Neutral
- CVT, A/T: P range

IDLE MIXTURE CHECK

1. Before inspection, set the vehicle to the pre-inspection condition.
2. Turn the ignition switch to the "LOCK" (OFF) position and then connect the M.U.T.-IIISE to the diagnosis connector.

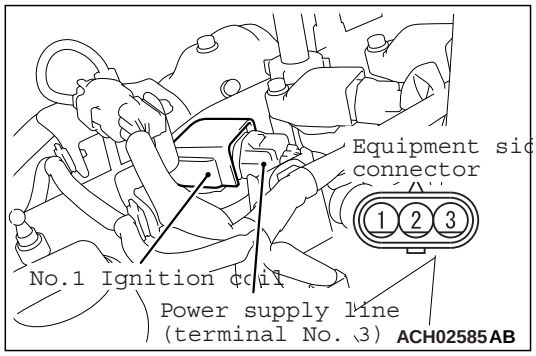

3. Set the timing light to the power supply line (terminal No. 3) of the ignition coil No. 1.

   NOTE: The power supply line is looped and also longer than the other ones.
4. Start the engine and let it run at idle.
5. Check that ignition timing is at the standard value.

   Standard value: approximately 10° BTDC

NOTE:

- *The ignition timing may fluctuate within ±7°. This is normal.*
- *In higher altitude, the ignition timing is more advanced than the standard value by approximately 5°.*
- *Wait till approximately 1 minute passes after the engine started, and check the ignition timing when the engine stabilized.*

6. Run the engine at 2,000 – 3,000 r/min for 2 minutes.
7. Set the CO, HC tester.
8. Check the CO contents and the HC contents at idle.

   Standard value
   CO contents: 0.3 % or less
   HC contents: 200 ppm or less
9. If there is a deviation from the standard value, inspect the MPI system.
10. Remove the timing light and CO, HC tester.
11. Turn the ignition switch to "LOCK" (OFF) position and then disconnect the M.U.T.-IIISE.

M.U.T.-III SE

M.U.T.-III SE

Vehicle communication interface-Lit (V.C.I.-Lite)



MB992744

V.C.I.-Lite main harness A

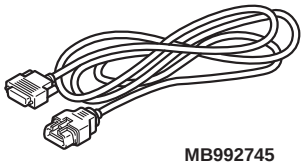

MB992745

V.C.I.-Lite main harness B

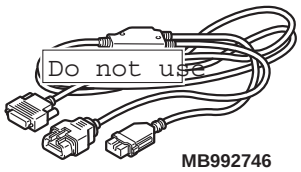

MB992746

V.C.I.-Lite USB cable short

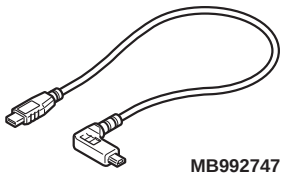

MB992747

V.C.I.-Lite USB cable long

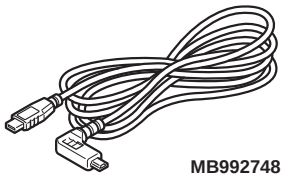

MB992748

ACB05419AE

⚠ CAUTION

• For the V.C.I.-Lite, use MB992745, MB992747 and MB992748.

⚠ CAUTION

Turn the ignition switch to the "LOCK" (OFF) position <except vehicles with Keyless Operation System (KOS)> or put the power supply mode is OFF <vehicles with Keyless Operation System (KOS)> before connecting or disconnecting the M.U.T.-IIISE.

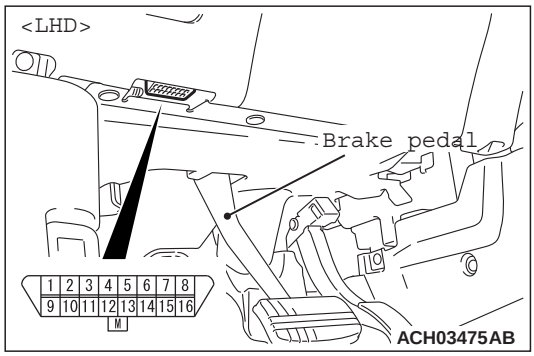

ACH03475AB

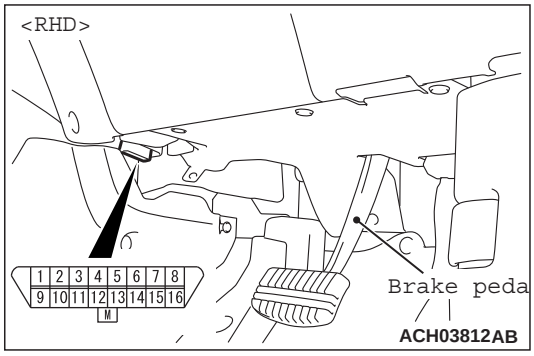

ACH03812AB

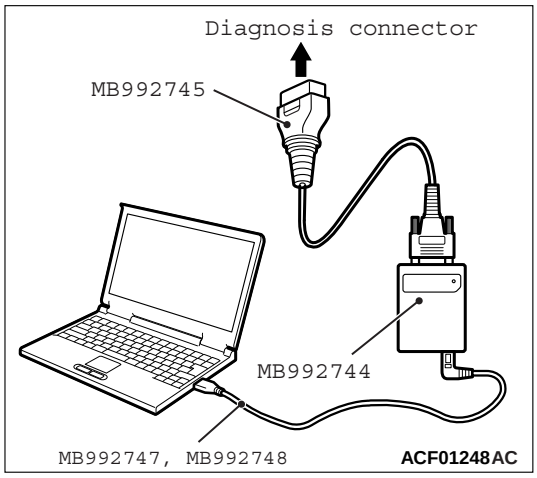

ACF01248AC

Connect the M.U.T.-IIISE to the diagnosis connector as shown in the illustration.

8.2.2 Compression ignition engine emissions

8.2.2.1 Exhaust emission control equipment

M6170201100038

SYSTEM CONFIGURATION DIAGRAM

Vehicles without GPF

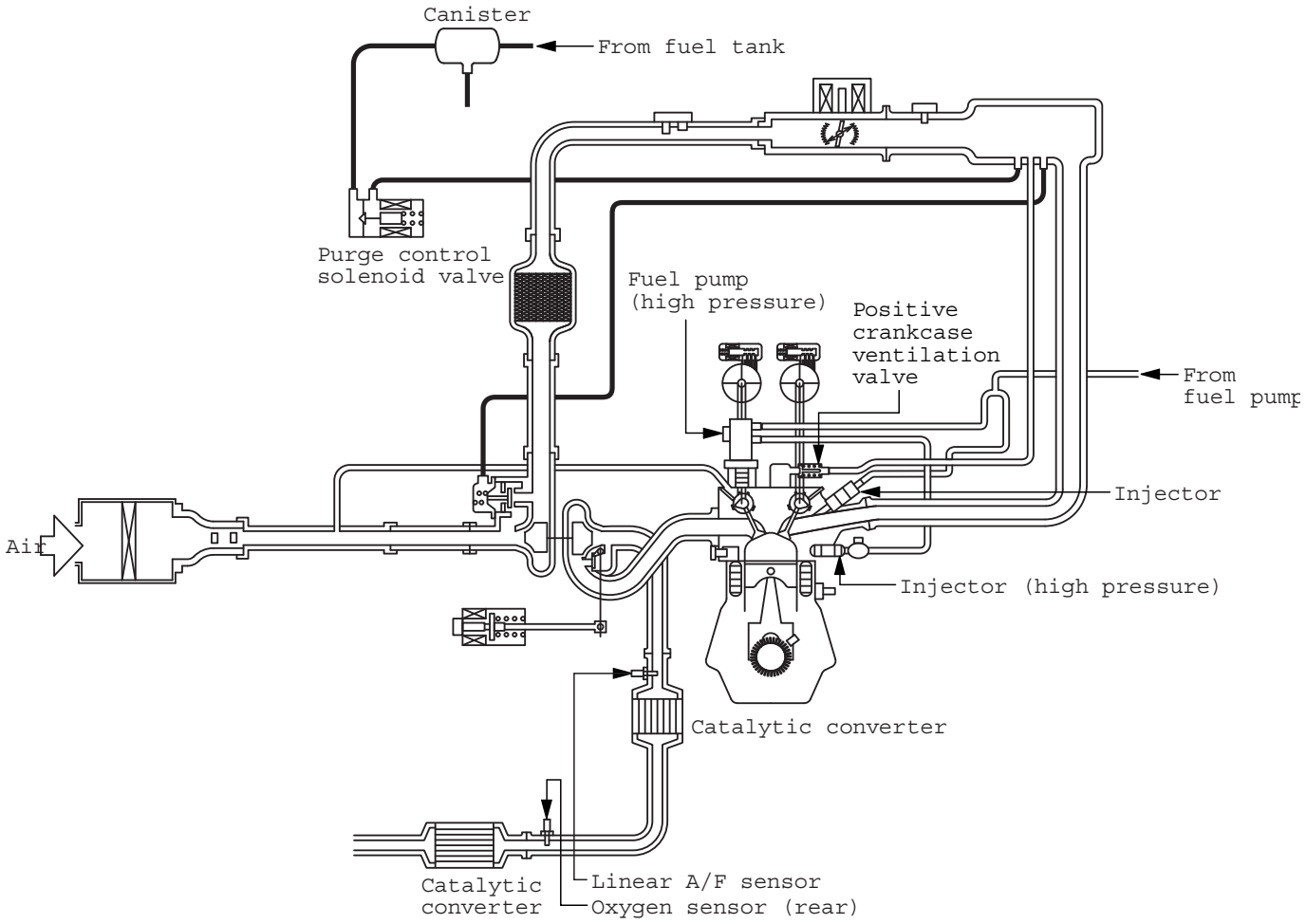

ACH02807AB

Exhaust gas cleaning devices list

System		Objective / Function	Composition parts
Crankcase ventilation system		HC decrease Re-combustion of blow-by gas.	Positive crankcase ventilation (PCV) valve
Evaporative emission control system		HC decrease Re-combustion of fuel vapour gas.	• Canister • Purge control solenoid valve
Emission reduction systems	Air-fuel ratio feedback control	Decrease of CO, HC and NOx Controls air-fuel ratio of air-fuel mixture to become theoretical air-fuel ratio (about 14.7), which is when the 3-way catalytic converter's cleaning performance is best. It also controls optimum fuel supply based on coolant temperature, driving conditions etc.	• Engine-ECU • Air flow sensor • Injector • Injector (high pressure) • Linear A/F sensor • Oxygen sensor (rear) • Crank angle sensor etc.
	Catalytic converter	Decrease of CO, HC and NOx It facilitates oxidation of CO and HC and reduction of NOx so that all 3 component gases are cleaned simultaneously.	Monolith catalyst

Vehicles with GPF

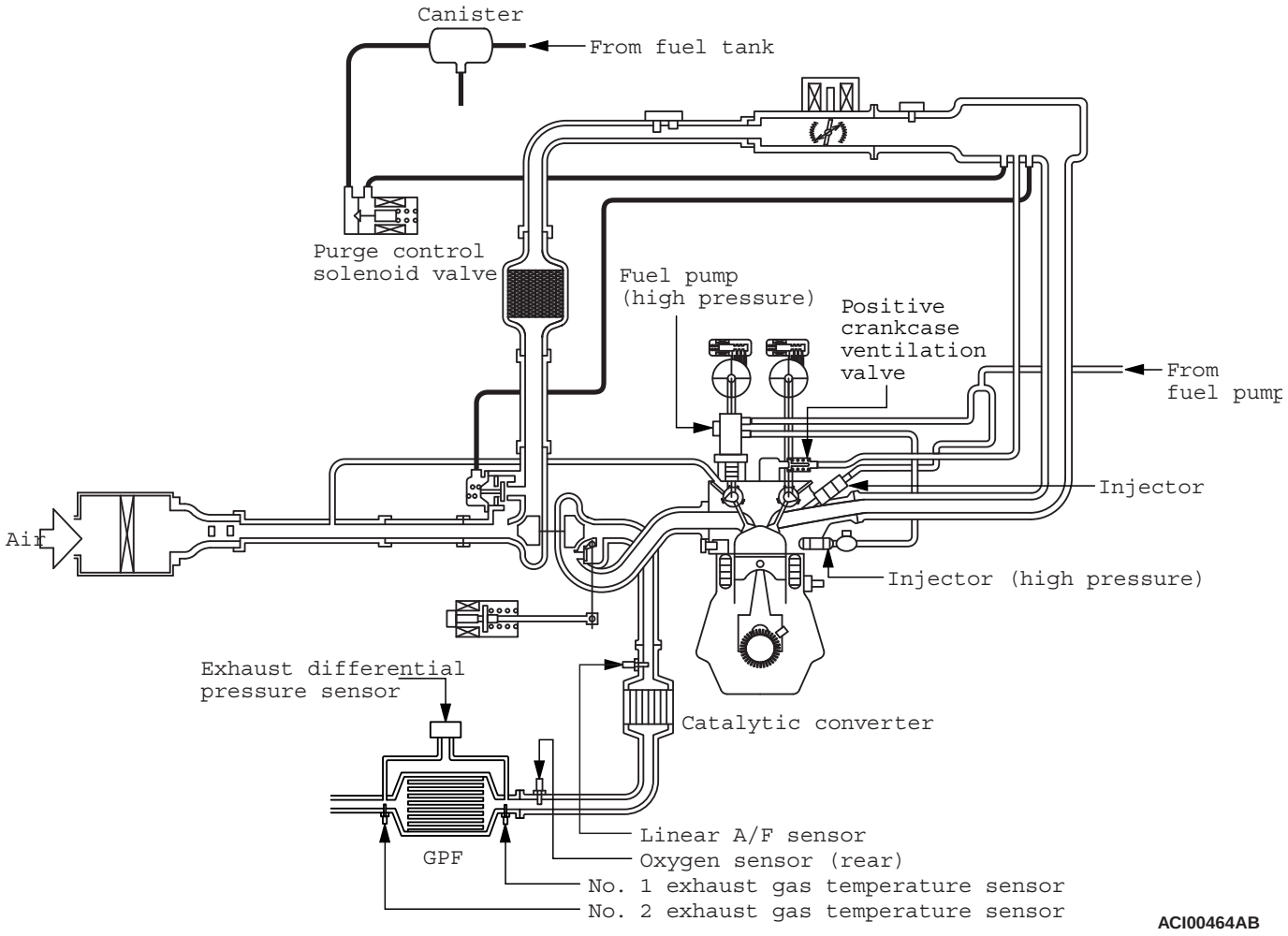

Exhaust gas cleaning devices list

System	Objective / Function	Composition parts
Crankcase ventilation system	HC decrease Re-combustion of blow-by gas.	Positive crankcase ventilation (PCV) valve
Evaporative emission control system	HC decrease Re-combustion of fuel vapour gas.	• Canister • Purge control solenoid valve
GPF system	Particulate matter (PM) is removed. PM accumulated in the GPF is removed.	• GPF • No. 1 exhaust gas temperature sensor • No. 2 exhaust gas temperature sensor • Exhaust differential pressure sensor

System		Objective / Function	Composition parts
Emission reduction systems	Air-fuel ratio feedback control	Decrease of CO, HC and NOx Controls air-fuel ratio of air-fuel mixture to become theoretical air-fuel ratio (about 14.7), which is when the 3-way catalytic converter's cleaning performance is best. It also controls optimum fuel supply based on coolant temperature, driving conditions etc.	• Engine-ECU • Air flow sensor • Injector • Injector (high pressure) • Linear A/F sensor • Oxygen sensor (rear) • Crank angle sensor etc.
	Catalytic converter	Decrease of CO, HC and NOx It facilitates oxidation of CO and HC and reduction of NOx so that all 3 component gases are cleaned simultaneously.	Monolith catalyst

EXHAUST PIPE AND MUFFLER CONSTRUCTION DIAGRAM

<2WD>

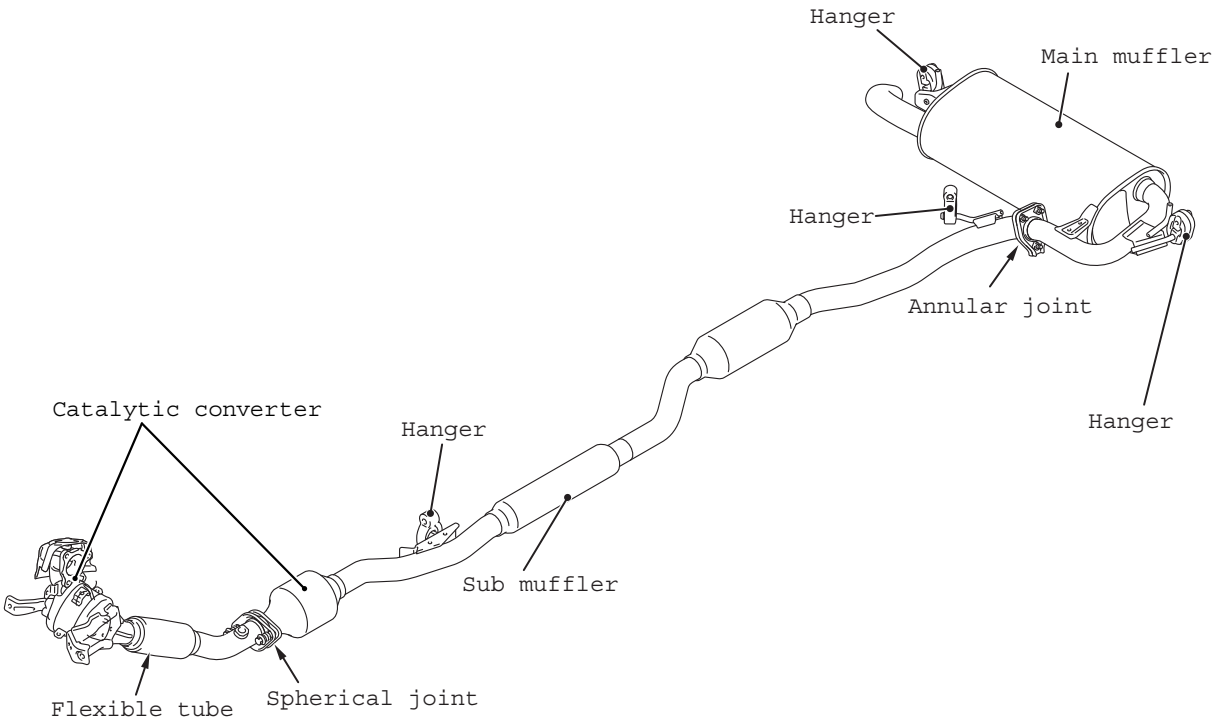

ACH01580AB

<4WD>

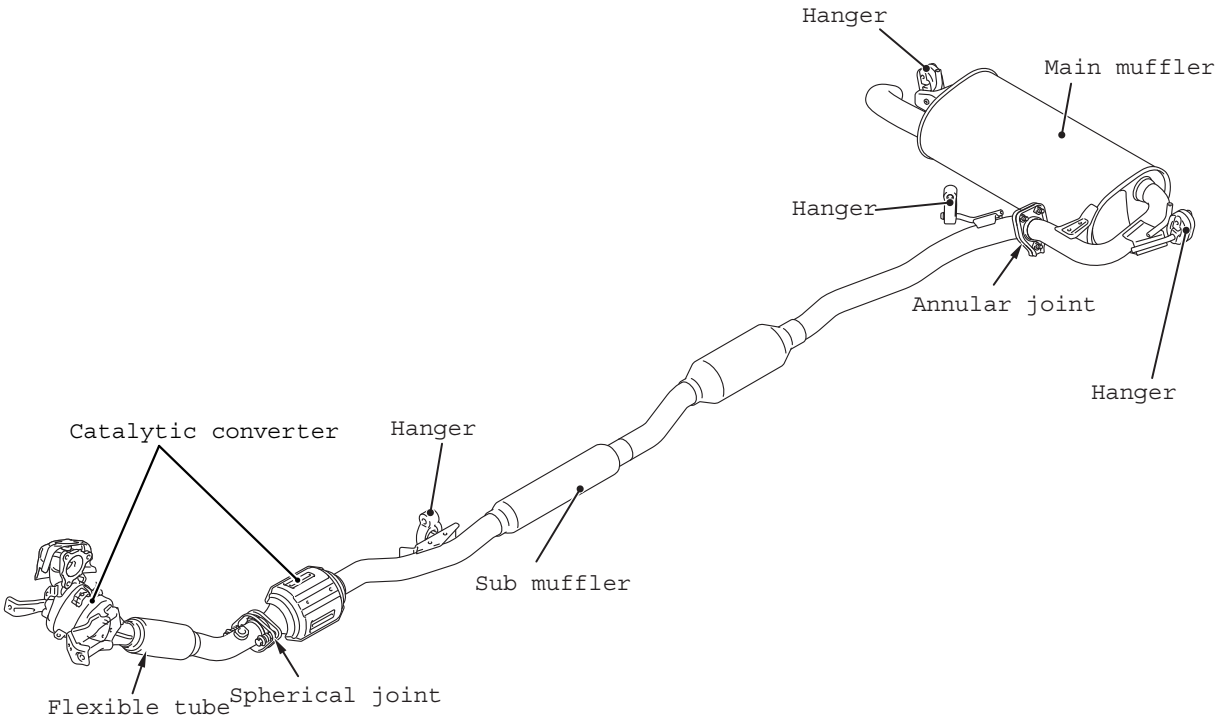

ACH01579AB

A 3-piece type of exhaust pipe and muffler which consists of the front exhaust pipe, centre exhaust pipe, and exhaust main muffler has been adopted, and has the following features:

- Due to the adoption of rear exhaust layout, the exhaust pipe length has been shortened, the exhaust gas temperature drop at engine start has been prevented, and the early-activation of catalytic converter has been accelerated, which reduces the exhaust gas.
- The large exhaust main muffler has been adopted to reduce the exhaust noise.
- The transmission of engine vibration to the car body is reduced by using a flexible tube.
- The catalytic converter is placed in front of the centre exhaust pipe to reduce exhaust gas.
- A 4-point exhaust muffler hanger has been adopted for optimisation of position, which reduces vibration to the vehicle.
- The pre-muffler is placed at two locations of the centre exhaust pipe to reduce exhaust noise.

GPF SYSTEM

Through the input signal sent from each sensor, the engine-ECU anticipates the amount of particulate matter (PM) accumulated in the GPF. Taking control of automatically regenerating the GPF under the certain condition, the engine-ECU removes the PM when the PM accumulates more than the standard. At the GPF regeneration, the GPF temperature is higher and the high temperature exhaust gas discharges.

GPF CONTROL

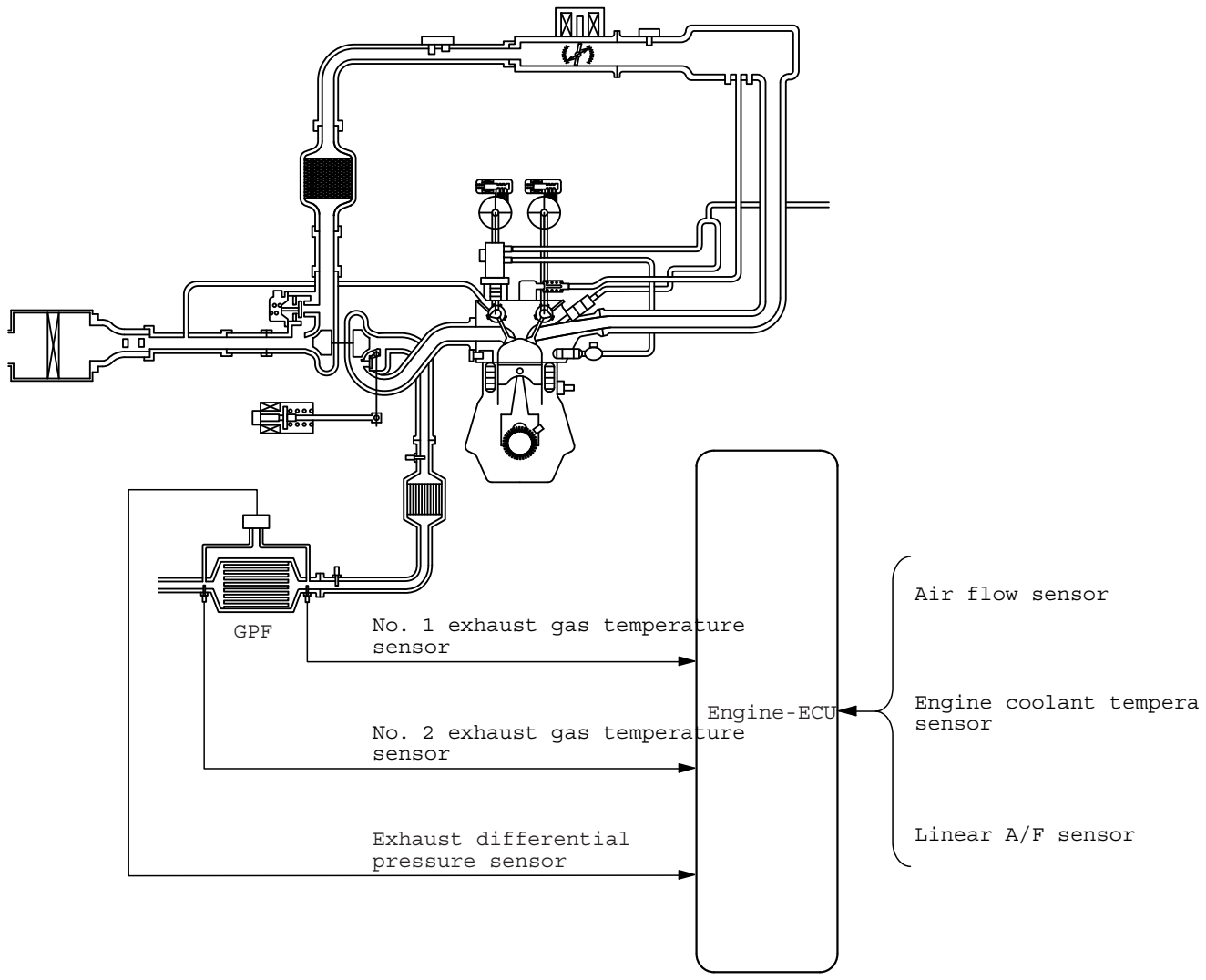

ACI00424AB

The engine-ECU is carried out the following control related to GPF.

Main control items of the GPF

Control items	Outline
PM particle number (PN) emissions calculation	The PN emissions are calculated from engine operating conditions.
Soot combustion calculation	The combustion condition of soot is calculated from the temperature and the oxygen concentration of GPF.
Accumulated soot calculation	The accumulated amount of soot is estimated from the PN emissions calculation, the soot combustion calculation, the accumulated ash calculation, the measured value of the exhaust differential pressure sensor and the filtering efficiency of GPF.
Accumulated ash calculation	The accumulated amount of ash in GPF is calculated from the accumulated soot calculation and measured value of the exhaust differential pressure sensor.
GPF protection	To prevent excessive temperature rising due to the soot combustion, fuel cut time is limited from the exhaust gas temperature and the accumulated amount of soot.
GPF temperature rising	If the exhaust gas temperature is not reached the soot combustion temperature, the ignition retard will be done to raise the exhaust gas temperature.

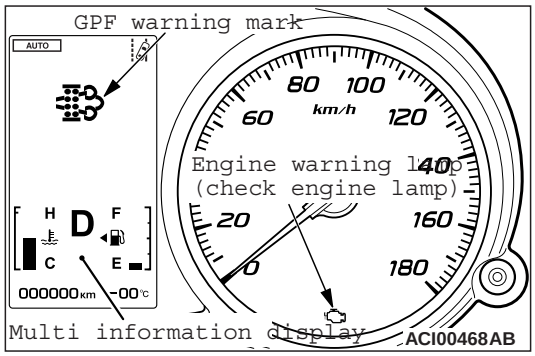

When detecting that the PM accumulates more than the standard in the GPF, the engine-ECU shows the GPF warning mark (red) on the multi information display in the combination meter. This encourages the driver to drive the vehicle under the conditions that are adequate to accomplish the GPF regeneration. If the driver does not drive the vehicle under the conditions that are adequate to accomplish the GPF regeneration although the GPF warning mark (red) is shown on the multi information display, the PM accumulation in the GPF gets higher, and then the GPF can possibly reach its clogged or damaged level. Thus, the engine-ECU shows the GPF warning mark (yellow), and illuminates the engine warning lamp to warn the driver that the vehicle must be brought to the workshop.

GPF REGENERATION CONTROL

The GPF regeneration is performed under the following conditions:

- Engine: after warm-up
- Vehicle speed: 60 km/h or more
- Amount of accumulated PM exceeds specified value.

The engine-ECU raises the GPF temperature which it can regenerate during driving, and burns the PM using oxygen supplied to the GPF due to the fuel cut at the time of releasing the accelerator pedal.
When GPF regeneration is executed from M.U.T.-IIISE, the following contents become effective.

- Releasing of the torque restriction at GPF Clogging failure and cancellation of the fuel cut limit.
- Display of soot load level, exhaust gas temperature etc. on the M.U.T.-IIISE display screen.

RISING TEMPERATURE CONTROL

The engine-ECU raises the exhaust gas temperature upstream of the GPF to about 650°C. This will raise the temperature of PM and react with oxygen supplied at the time of fuel cut and it can burn PM.

No. 1 EXHAUST GAS TEMPERATURE SENSOR, No. 2 EXHAUST GAS TEMPERATURE SENSOR

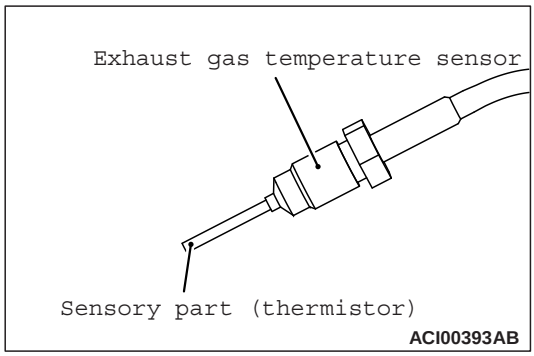

The No. 1 exhaust gas temperature sensor is installed to the upstream area of the GPF, the No. 2 exhaust gas temperature sensor is installed to the downstream area of the GPF. Each sensor detects the temperature in the each area through the change in the thermistor resistance and outputs the voltage to the engine-ECU in accordance with the temperature. The engine-ECU performs the soot combustion calculation, the GPF protection control and the GPF temperature rise control through this output voltage. The sensor characteristics are as shown in the charts.

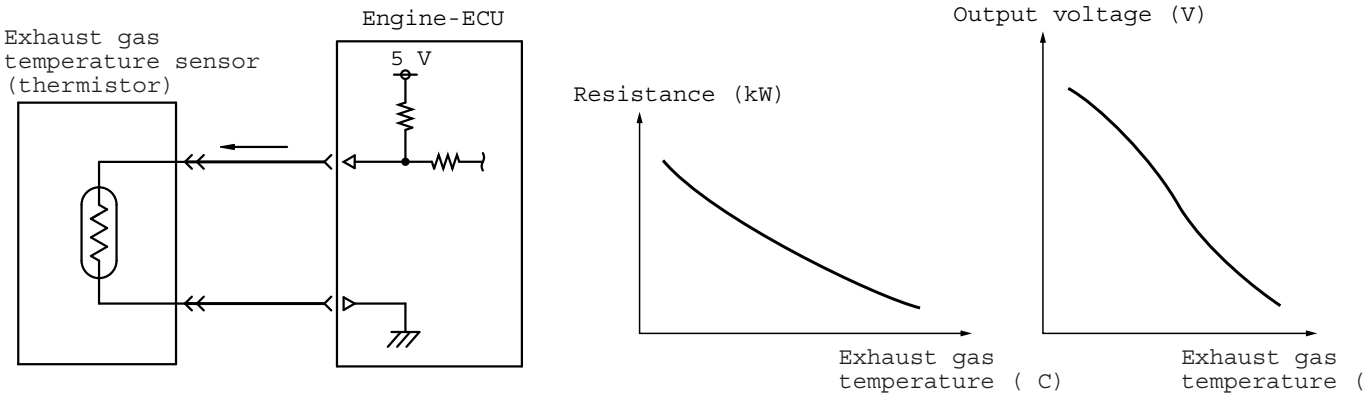

EXHAUST DIFFERENTIAL PRESSURE SENSOR

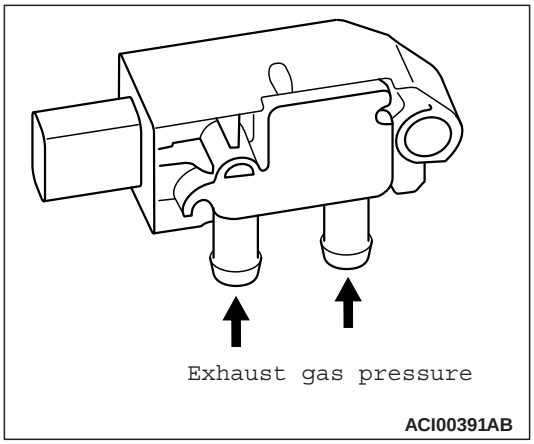

The exhaust differential pressure sensor is installed near the catalytic converter. Using the piezo resistive semiconductor, the exhaust differential pressure sensor outputs the voltage to the engine-ECU in accordance with the difference in the voltage between the GPF upstream area and the GPF downstream area. The engine-ECU performs the soot combustion calculation, the accumulated soot calculation and the accumulated amount of ash calculation through this output voltage. The sensor characteristics are as shown in the charts.

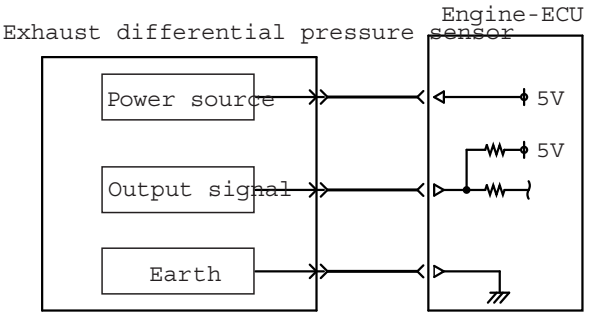

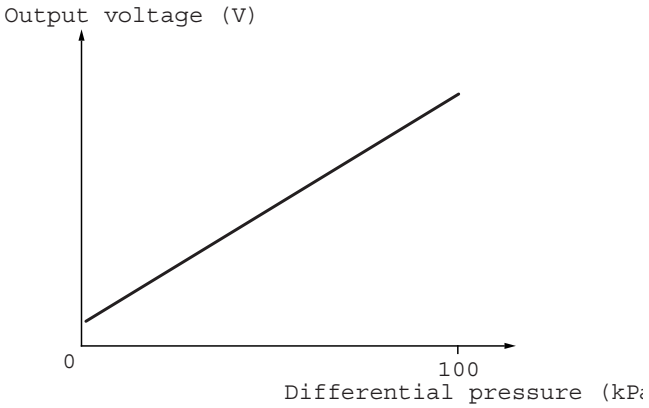

8.2.2.2 Opacity

M6170201200013

"Pre-inspection condition" refers to the condition that the vehicle must be in before proper engine inspection can be carried out. If you see the words "Set the vehicle to the pre-inspection condition". In this manual, it means to set the vehicle to the following condition.

- Engine coolant temperature 80 to 90°C
- Lamps, electric cooling fan and all accessories: OFF
- M/T: Neutral
- CVT, A/T: P range

M.U.T.-III SE

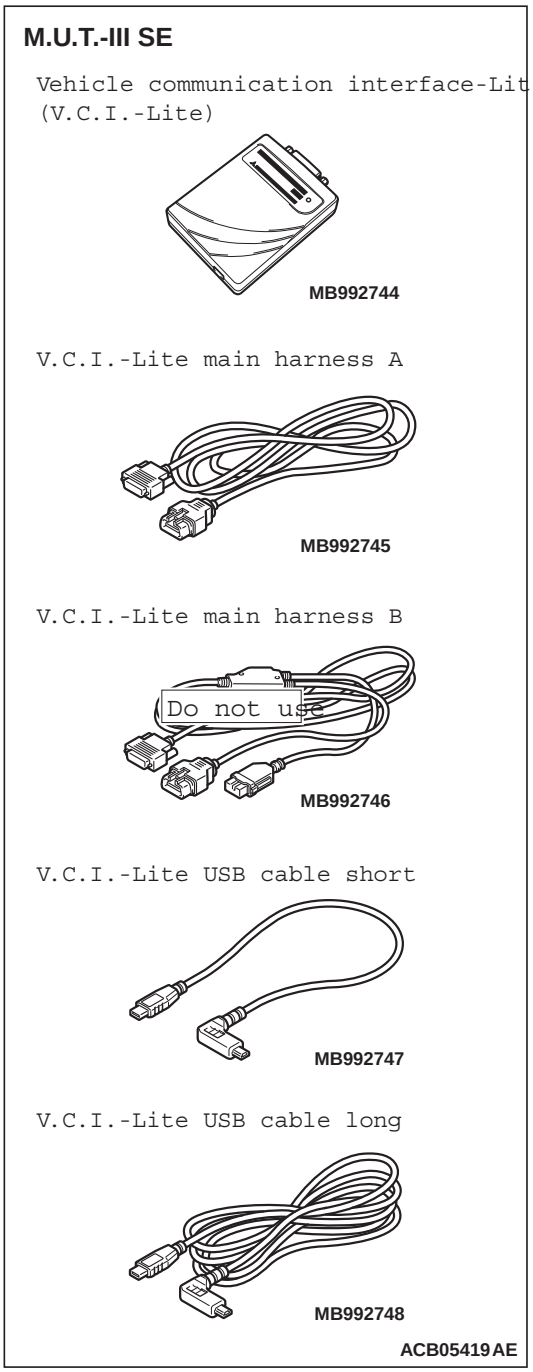

⚠ CAUTION

• For the V.C.I.-Lite, use MB992745, MB992747 and MB992748.

- Refer to the "M.U.T.-IIISE User's Manual" for instructions on handling the M.U.T.-IIISE.

⚠ CAUTION

Turn the ignition switch to the "LOCK" (OFF) position <except vehicles with Keyless Operation System (KOS)> or put the power supply mode is OFF <vehicles with Keyless Operation System (KOS)> before connecting or disconnecting the M.U.T.-IIISE.

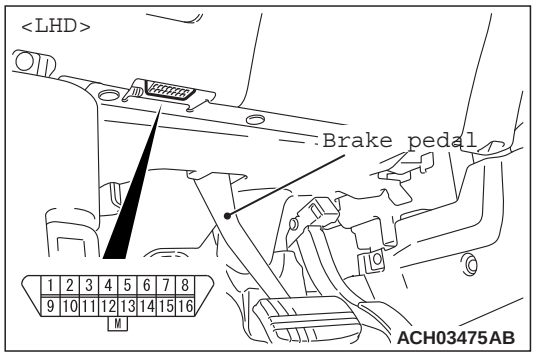

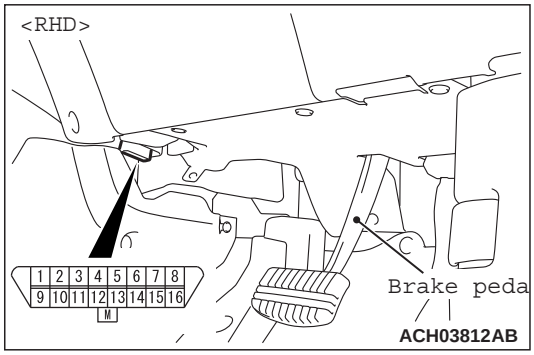

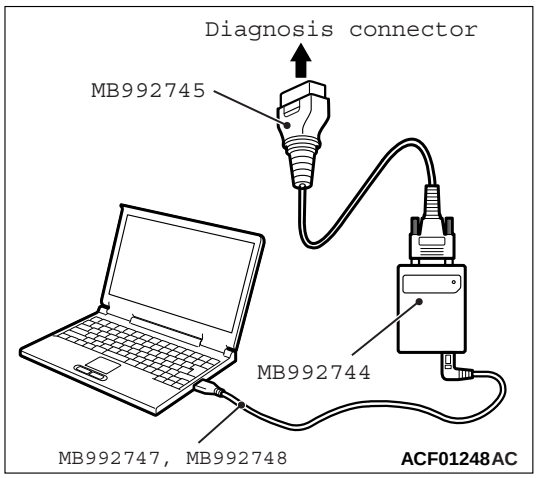

Connect the M.U.T.-IIISE to the diagnosis connector as shown in the illustration.

8.3. Electromagnetic interference suppression

M6170300000024

"Not Applicable"

8.4. Other items related to the environment

8.4.1. Fluid leaks

M6170400100017

"Not Applicable"

GROUP 9

SUPPLEMENTARY TESTS FOR PASSENGER-CARRYING VEHICLES CATEGORIES M2, M3

CONTENTS

9.1. DOORS 9-3
9.1.1. Entrance and exit doors 9-3
9.1.2. Emergency exits 9-3

9.2. DEMISTING AND DEFROSTING SYSTEM (X)2 9-3

9.3. VENTILATION & HEATING SYSTEM (X)2 9-3

9.4. SEATS. 9-3
9.4.1. Passenger seats (including seats for accompanying personnel) 9-3
9.4.2. Driver's seat (additional requirements) 9-3

9.5. INTERIOR LIGHTING AND DESTINATION DEVICES (X)2 9-3

9.6. GANGWAYS, STANDING AREAS 9-3

9.7. STAIRS AND STEPS. 9-3

9.8. PASSENGER COMMUNICATION SYSTEM (X)2 9-3

9.9. NOTICES (X)2 9-4

9.10. REQUIREMENTS REGARDING THE TRANSPORTATION OF CHILDREN. (X)2 9-4
9.10.1. Doors 9-4
9.10.2. Signalling and special equipment . . 9-4

9.11. REQUIREMENTS REGARDING THE TRANSPORTATION OF PERSONS WITH REDUCED MOBILITY (X)2. 9-4

9.11.1. Doors, ramps and lifts 9-4
9.11.2. Wheelchair restraint system 9-4
9.11.3. Signalling and special equipment . . 9-4

9.12. OTHER SPECIAL EQUIPMENT (X)2

. 9-4
9.12.1. Installations for food preparation . . . 9-4
9.12.2. Sanitary installation 9-4
9.12.3. Other devices (e.g. audio-visual systems) 9-4

9.1. Doors

9.1.1. Entrance and exit doors

M6180100100017

"Not Applicable"

9.1.2. Emergency exits

M6180100200014

"Not Applicable"

9.2. Demisting and defrosting system (X)2

M6180200000017

"Not Applicable"

9.3. Ventilation & heating system (X)2

M6180300000014

"Not Applicable"

9.4. Seats

9.4.1. Passenger seats (including seats for accompanying personnel)

M6180400100018

"Not Applicable"

9.4.2. Driver's seat (additional requirements)

M6180400200015

"Not Applicable"

9.5. Interior lighting and destination devices (X)2

M6180500000018

"Not Applicable"

9.6. Gangways, standing areas

M6180600000015

"Not Applicable"

9.7. Stairs and steps

M6180700000012

"Not Applicable"

9.8. Passenger communication system (X)2

M6180800000019

"Not Applicable"

9.9. Notices (X)2

M6180900000016

"Not Applicable"

9.10. Requirements regarding the transportation of children. (X)2

9.10.1. Doors

M6181000100013

"Not Applicable"

9.10.2. Signalling and special equipment

M6181000200010

"Not Applicable"

9.11. Requirements regarding the transportation of persons with reduced mobility (X)2

9.11.1. Doors, ramps and lifts

M6181100100010

"Not Applicable"

9.11.2. Wheelchair restraint system

M6181100200017

"Not Applicable"

9.11.3. Signalling and special equipment

M6181100300014

"Not Applicable"

9.12. Other special equipment (X)2

9.12.1. Installations for food preparation

M6181200100017

"Not Applicable"

9.12.2. Sanitary installation

M6181200200014

"Not Applicable"

9.12.3. Other devices (e.g. audio-visual systems)

M6181200300011

"Not Applicable"