GROUP 1

BRAKING EQUIPMENT

CONTENTS

1.1. MECHANICAL CONDITION AND OPERATION 1-2

1.1.1. Service brake pedal/hand lever pivot 1-2

1.1.2. Pedal/hand lever condition and travel of the brake operating device 1-2

1.1.3. Vacuum pump or compressor and reservoirs 1-2

1.1.4. Low pressure warning gauge or indicator 1-2

1.1.6. Parking brake activator, lever control, parking brake ratchet, electronic parking brake 1-2

1.1.8. Couplings for trailer brakes (electrical & pneumatic) 1-2

1.1.9. Energy storage reservoir pressure tank 1-2

1.1.11. Rigid brake pipes 1-2

1.1.12. Flexible brake hoses 1-2

1.1.13. Brake linings and pads 1-3

1.1.14. Brake drums, brake discs 1-3

1.1.15. Brake cables, rods, levers, linkages 1-6

1.1.16. Brake actuators (including spring brakes or hydraulic cylinders) 1-6

1.1.17. Load sensing valve 1-6

1.1.18. Slack adjusters and indicators 1-6

1.1.19. Endurance braking system (where fitted or required) 1-6

1.1.20. Automatic operation of trailer brakes 1-6

1.1.22. Test connections (where fitted or required) 1-6

1.1.23. Overrun brake 1-6

1.2 SERVICE BRAKING PERFORMANCE AND EFFICIENCY 1-7

1.2.1. Performance 1-7

1.2.2. Efficiency 1-7

1.3. SECONDARY (EMERGENCY) BRAKING PERFORMANCE AND EFFICIENCY (IF MET BY SEPARATE SYSTEM) 1-7

1.3.1. Performance 1-7

1.3.2. Efficiency 1-7

1.4. PARKING BRAKING PERFORMANCE AND EFFICIENCY 1-8

1.4.1. Performance 1-8

1.4.2. Efficiency 1-8

1.5. ENDURANCE BRAKING SYSTEM PERFORMANCE 1-8

1.6. ANTI-LOCK BRAKING SYSTEM (ABS) 1-9

1.7 ELECTRONIC BRAKE SYSTEM (EBS) 1-9

1.8 BRAKE FLUID 1-9

1.1. Mechanical condition and operation

1.1.1. Service brake pedal/hand lever pivot

M6101010100049

"Not Applicable"

1.1.2. Pedal/hand lever condition and travel of the brake operating device

M6101010200046

"Not Applicable"

1.1.3. Vacuum pump or compressor and reservoirs

M6101010300043

"Not Applicable"

1.1.4. Low pressure warning gauge or indicator

M6101010400040

"Not Applicable"

1.1.6. Parking brake activator, lever control, parking brake ratchet, electronic parking brake

M6101000100048

GENERAL INFORMATION

The parking brake is a mechanical rear-wheel acting type, and its operation utilises a parking brake lever.

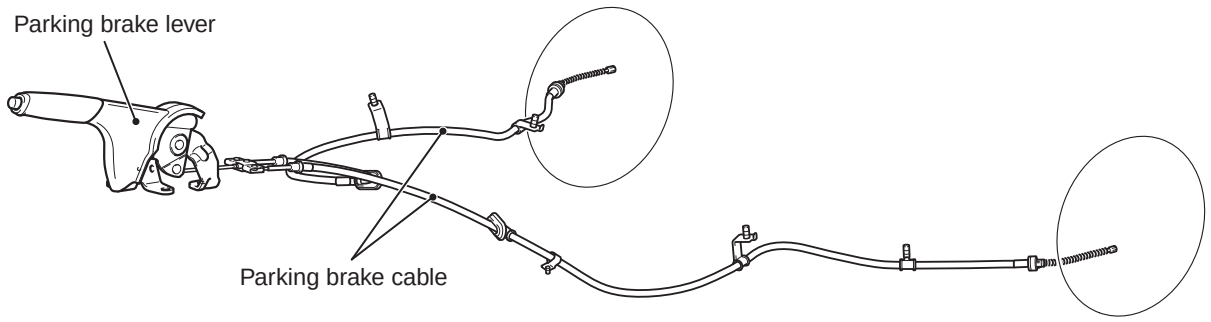

ACC03267AB

1.1.8. Couplings for trailer brakes (electrical & pneumatic)

M6101010800048

"Not Applicable"

1.1.9. Energy storage reservoir pressure tank

M6101010900045

"Not Applicable"

1.1.11. Rigid brake pipes

M6101011100042

"Not Applicable"

1.1.12. Flexible brake hoses

M6101011200049

"Not Applicable"

1.1.13. Brake linings and pads

M6101000200045

BRAKE PAD CHECK

⚠ CAUTION

If there is a significant difference in thickness between the brake pads at right and left, check the sliding area and the run-out of the brake disc.

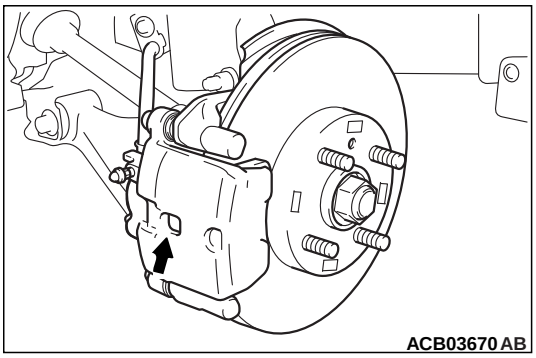

1. Visually check the thickness of brake pad from the inspection hole of the caliper body.

   Standard value: 9.0 mm
   Limit: 2.0 mm

2. If the brake pad thickness is less than the limit value, replace the brake pad.

BRAKE LINING THICKNESS CHECK

⚠ CAUTION

- **Whenever the shoe and lining assembly is replaced, replace both RH and LH assemblies as a set to prevent the car from pulling to one side when braking.**
- **If there is a significant difference in the thickness of the shoe and lining assemblies on the left and right sides, check the sliding condition of the piston.**

1. Remove the brake drum.

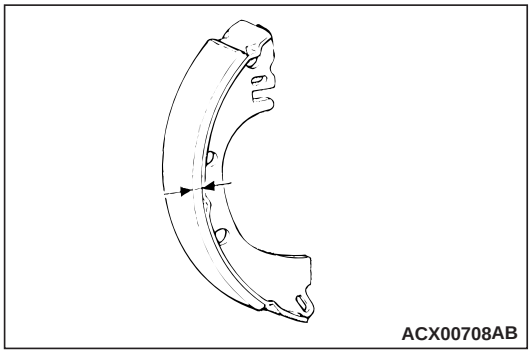

2. Measure the thickness of the brake lining at the area with the most wear.

   Standard value: 4.0 mm
   Limit: 1.0 mm

3. Replace the shoe and lining assembly if the brake lining thickness is less than the limit or if it is not worn evenly. For installation procedures for the shoe and lining assembly.

1.1.14. Brake drums, brake discs

M6101000300064

BRAKE DISC CHECK

BRAKE DISC THICKNESS CHECK

1. Remove contaminants or corrosion from the brake disc surface.

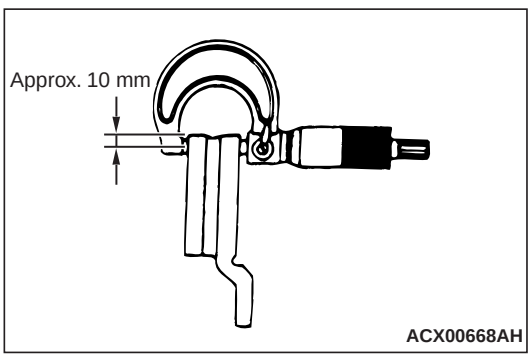

2. Use a micrometer to measure the brake disc thickness at minimum eight points which are 10 mm inward from its circumference.

   Standard value: 17.0 mm

   Limit: 15.4 mm

3. If the brake disc thickness is worn beyond the limit value at more than one point, replace the brake disc. Then rephase the brake disc so that the minimum brake disc run-out is obtained, or grind the disc while in place on the vehicle so that its run-out is below the limit value.

BRAKE DISC THICKNESS UNEVENNESS CHECK AND CORRECTION

1. Remove contaminants or corrosion from the brake disc surface.

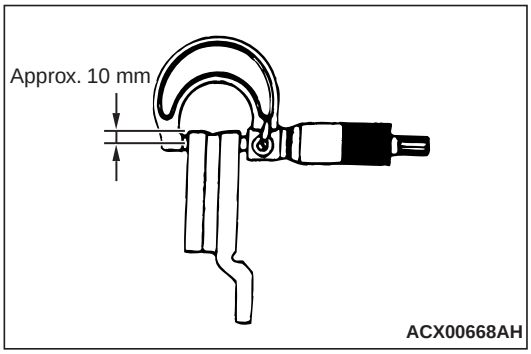

2. Use a micrometer to measure the brake disc thickness at minimum eight points which are 10 mm inward from its circumference. Then record the measurements.
3. If the brake disc thickness unevenness (the difference between the maximum and minimum values measured above) is 0.015 mm or less, it is within the standard value.
4. If the brake disc thickness unevenness exceeds the standard value, grind it according to the procedure below while it is mounted on the vehicle.

   NOTE: If it is suspected that the brake disc thickness will become less than the limit value after the grinding, replace the brake disc. Then rephase the brake disc run-out is obtained, or grind the disc while in place on the vehicle so that its run-out is below the limit value.

   (1) Check for wheel bearing looseness in the axial direction.

⚠ CAUTION

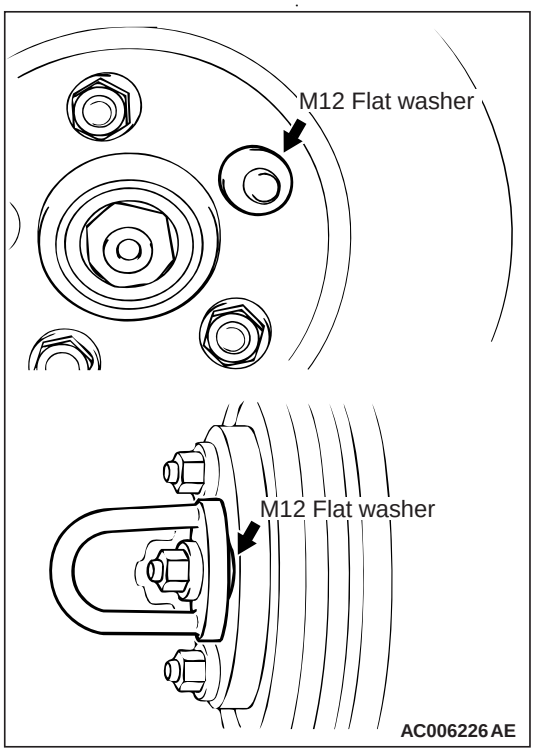

Insert M12 plain washer and then install the adapter as shown before grinding. Failure to use the M12 plain washer will cause the brake disc to be deformed and ground incorrectly.

- **To grind the brake disc, ensure that all the nuts (M12 X 1.5) are tightened evenly and in a diagonal sequence to the specified torque (100 N·m). Failure to use all the nuts (M12 X 1.5), excessive or uneven tightening torque will cause the brake disc to deform or judder.**

   (2) Correct the brake disc uneven thickness by grinding it while in place on the vehicle.

BRAKE DISC RUN-OUT CHECK AND CORRECTION

1. Check for wheel bearing looseness in the axial direction.
2. If the axial play is within the limit value, secure the brake disc by tightening the nut (M12 X 1.5) evenly to the specified torque (100 N·m). If the axial play still exceeds the limit value, replace the wheel bearing. Then secure the brake disc by tightening the nut (M12 X 1.5) evenly to the specified torque (100 N·m).

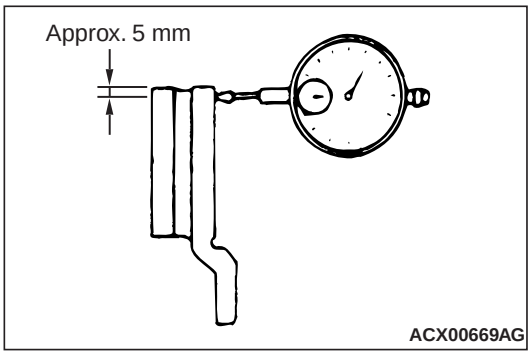

3. Place a dial gauge ca. 5 mm inward from the circumference of the brake disc to measure its run-out.

   Limit: 0.06 mm

4. If the brake disc run-out exceeds the limit value, rephase the brake disc to the hub so that the minimum brake disc run-out is obtained.

⚠ CAUTION

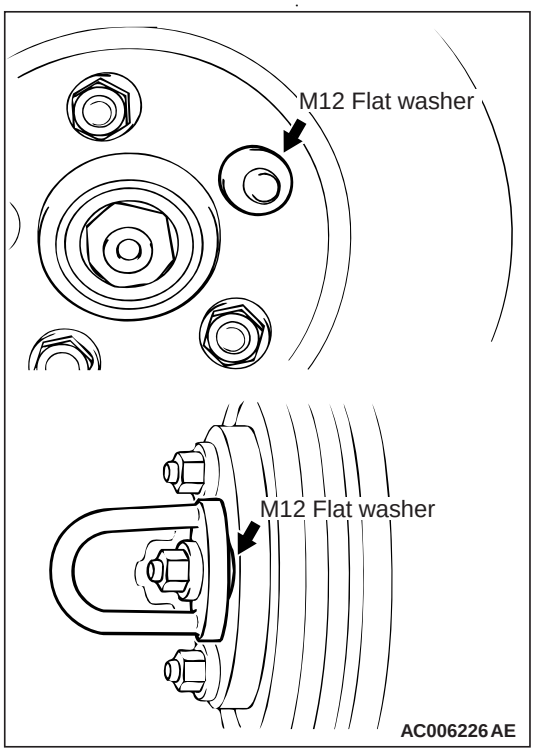

Insert M12 plain washer and then install the adapter as shown before grinding. Failure to use the M12 plain washer will cause the brake disc to be deformed and ground incorrectly.

- **To grind the brake disc, ensure that all the nuts (M12 X 1.5) are tightened evenly and in a diagonal sequence to the specified torque (100 N·m). Failure to use all the nuts (M12 X 1.5), excessive or uneven tightening torque will cause the brake disc to deform or judder.**

5. If the brake disc run-out exceeds the limit value after rephasing, grind the disc while in place on the vehicle so that the brake disc run-out is within the limit value.

   NOTE: If it is suspected that the brake disc thickness will be below the limit value, replace the brake disc. Then rephase the brake disc so that the minimum brake disc run-out is obtained, or grind the disc while in place on the vehicle so that its run-out is below the limit value.

REAR WHEEL HUB ASSEMBLY INSIDE DIAMETER CHECK

⚠ CAUTION

- **The vehicle speed detection encoder collects any metallic particle easily, because it is magnetised. Make sure that the encoder should not collect any metallic particle.**
- **Always keep magnetic substances away from the vehicle speed detection encoder.**

1. Remove the rear wheel hub assembly.

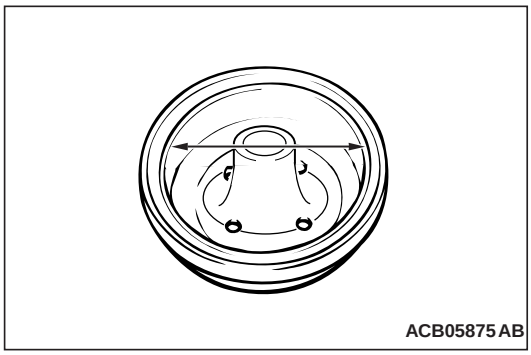

2. Measure the inside diameter of the rear wheel hub assembly at two or more locations.

   Standard value: 203 mm
   Limit: 205 mm

3. Replace the rear wheel hubs, shoe and lining assembly when wear exceeds the limit value or is badly imbalanced.

1.1.15. Brake cables, rods, levers, linkages

M6101011500040

"Not Applicable"

1.1.16. Brake actuators (including spring brakes or hydraulic cylinders)

M6101011600047

"Not Applicable"

1.1.17. Load sensing valve

M6101011700044

"Not Applicable"

1.1.18. Slack adjusters and indicators

M6101011800041

"Not Applicable"

1.1.19. Endurance braking system (where fitted or required)

M6101011900048

"Not Applicable"

1.1.20. Automatic operation of trailer brakes

M6101012000048

"Not Applicable"

1.1.22. Test connections (where fitted or required)

M6101012200042

"Not Applicable"

1.1.23. Overrun brake

M6101012300049

"Not Applicable"

1.2 Service braking performance and efficiency

1.2.1. Performance

M6102000100041

BRAKE DRAG FORCE CHECK

1. Remove the brake pad, shim and clip.

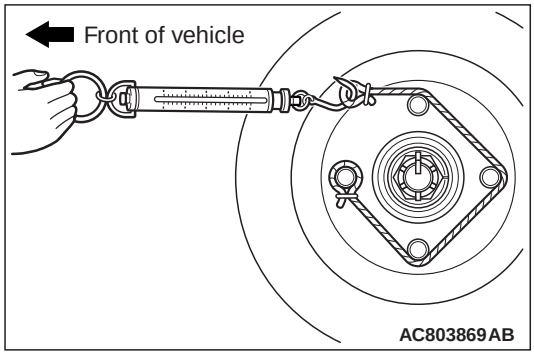

2. Using a spring scale, measure the hub sliding torque in the forward direction with the brake pad, shim and clip removed.
3. Install the brake pad, shim and clip.
4. Start the engine, and depress the brake pedal lightly two or three times. Then stop the engine. (Depressing force : approximately 50 – 100 N)
5. Turn the brake disc 10 times in the forward direction.
6. Using a spring scale, measure the hub sliding torque in the forward direction with the brake pad, shim and clip installed.
7. Obtain the disc brake drag force (difference between measured values of item 2 and item 6).

   Standard value: 47 N or less
8. If the brake drag force exceeds the standard value, disassemble the brake caliper assembly to check for fouling/rust on the piston sliding section and piston seal deterioration, and confirm whether the guide pin and lock pin slide properly.

1.2.2. Efficiency

M6102010200049

"Not Applicable"

1.3. Secondary (emergency) braking performance and efficiency (if met by separate system)

1.3.1. Performance

M6103000100044

"Not Applicable"

1.3.2. Efficiency

M6103010100045

"Not Applicable"

1.4. Parking braking performance and efficiency

1.4.1. Performance

M6104000100058

BRAKE DRAG FORCE CHECK

1. Remove the brake pad, shim and clip.

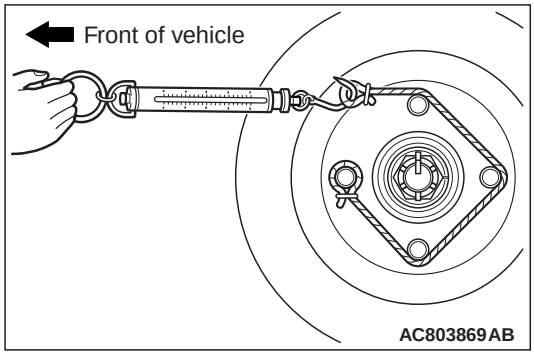

2. Using a spring scale, measure the hub sliding torque in the forward direction with the brake pad, shim and clip removed.
3. Install the brake pad, shim and clip.
4. Start the engine, and depress the brake pedal lightly two or three times. Then stop the engine. (Depressing force : approximately 50 – 100 N)
5. Turn the brake disc 10 times in the forward direction.
6. Using a spring scale, measure the hub sliding torque in the forward direction with the brake pad, shim and clip installed.
7. Obtain the disc brake drag force (difference between measured values of item 2 and item 6).

   Standard value: 47 N or less

8. If the brake drag force exceeds the standard value, disassemble the brake caliper assembly to check for fouling/rust on the piston sliding section and piston seal deterioration, and confirm whether the guide pin and lock pin slide properly.

1.4.2. Efficiency

M6104010200045

"Not Applicable"

1.5. Endurance braking system performance

M6104500000045

"Not Applicable"

1.6. Anti-lock braking system (ABS)

M6105000000043

ASC INDICATOR LAMP, ABS WARNING LAMP AND BRAKE WARNING LAMP CHECK

Check that ABS and brake warning lamps, ASC indicator lamp illuminate as follows.

NOTE: The brake warning lamp is used as a warning lamp for parking brake, brake fluid level, and EBD control.

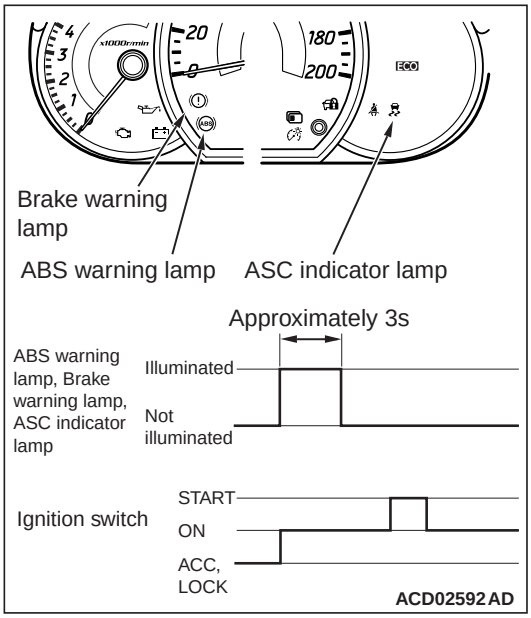

1. When the ignition switch is turned to the "ON" position, ABS and brake warning lamps, ASC indicator lamp illuminate.
2. The ABS and brake warning lamps, ASC indicator lamp illuminate for 3 seconds[*1] and then turn off[*2].
3. Otherwise, check the diagnosis code.

NOTE:

- *[*1]: The ABS warning lamp, the brake warning lamp or the ASC indicator lamp may continue illuminating. When a diagnosis code, which is associated with the wheel speed sensor, the G and yaw rate sensor or the steering wheel sensor, is set in the ASC-ECU as a historic fault, the ECU will allow the warning/indicator lamp to illuminate until the relevant fault is cleared.*
- *[*2]: The brake warning lamp does not turn "OFF" when the parking brake is applied or the brake fluid level is lowered.*

1.7 Electronic brake system (EBS)

M6106000000046

"Query raised for this content"

1.8 Brake fluid

M6107000000049

"Not Applicable"

GROUP 2

STEERING

CONTENTS

2.1. MECHANICAL CONDITION 2-2
2.1.1. Steering gear condition 2-2
2.1.2. Steering gear casing attachment . . . 2-2
2.1.3. Steering linkage condition 2-2
2.1.4. Steering linkage operation 2-2
2.1.5. Power steering 2-2

2.2. STEERING WHEEL, COLUMN AND HANDLE BAR 2-2
2.2.1. Steering wheel/handle bar condition . 2-2
2.2.2. Steering column/yokes and forks and steering dampers 2-2

2.3. STEERING PLAY 2-2

2.4. WHEEL ALIGNMENT (X)2 2-2

2.5. TRAILER STEERED AXLE TURNTABLE 2-2

2.6. ELECTRONIC POWER STEERING (EPS) 2-3

2.1. Mechanical condition

2.1.1. Steering gear condition

M6111000100049

"Not Applicable"

2.1.2. Steering gear casing attachment

M6111010200047

"Not Applicable"

2.1.3. Steering linkage condition

M6111010300044

"Not Applicable"

2.1.4. Steering linkage operation

M6111010400041

"Not Applicable"

2.1.5. Power steering

M6111010500048

"Not Applicable"

2.2. Steering wheel, column and handle bar

2.2.1. Steering wheel/handle bar condition

M6110110100044

"Not Applicable"

2.2.2. Steering column/yokes and forks and steering dampers

M6110110200041

"Not Applicable"

2.3. Steering play

M6110300000040

"Not Applicable"

2.4. Wheel alignment (X)2

M6110400000047

"Not Applicable"

2.5. Trailer steered axle turntable

M6110500000044

"Not Applicable"

2.6. Electronic Power Steering (EPS)

M6110600000041

GENERAL INFORMATION

The electric power steering (EPS) has been adopted which improves the steering feel in all ranges from low to high speed, and enhances the vehicle stability during high speed driving.
This steering system offers the following features:

- The steering gear is mounted on the front cross-member via the bushings with inner cylinders. These bushings are symmetrically arranged in order to suppress the difference in the steering feeling between left and right cornering.
- Improved fuel consumption by reduction of engine load, and weight saving by decrease of the number of parts have been achieved with the introduction of the electric power steering system.
- 3-spoke type steering wheel integrated with an SRS airbag has been adopted.
- Shock absorbing mechanism has been adopted with the steering column assembly.
- On vehicles with KOS, an electric steering lock is adopted.

CONSTRUCTION DIAGRAM

<LHD>

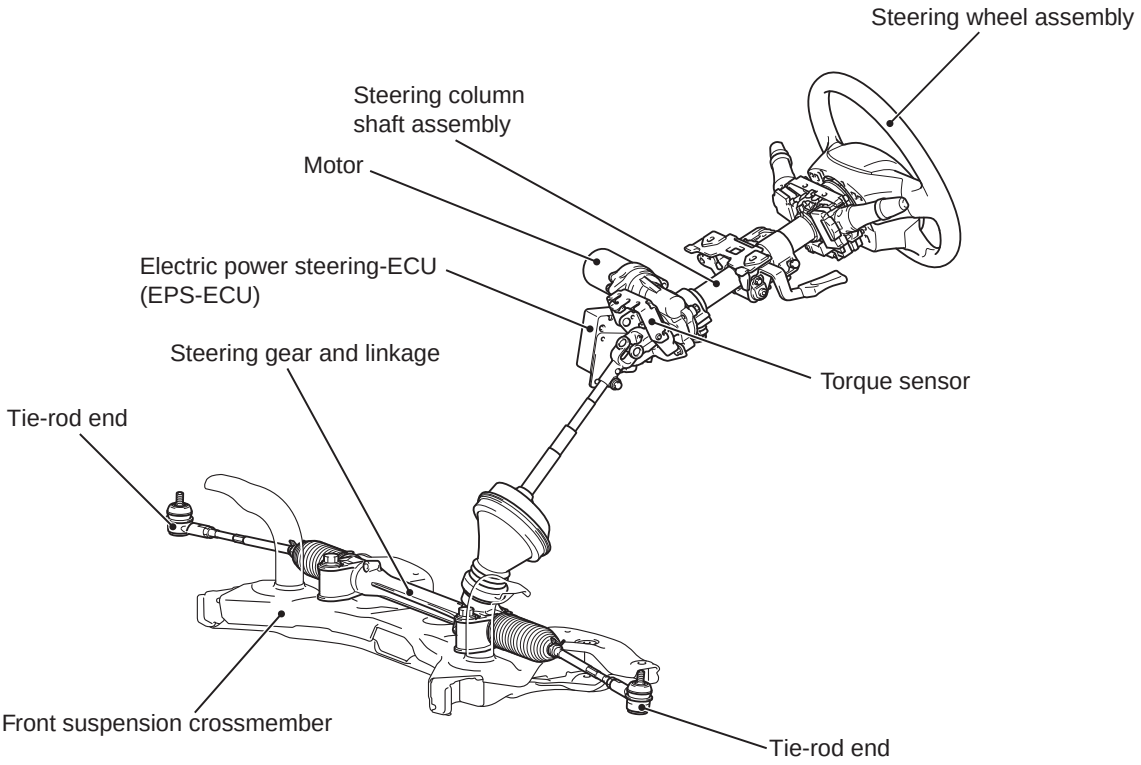

ACC03157AB

<RHD>

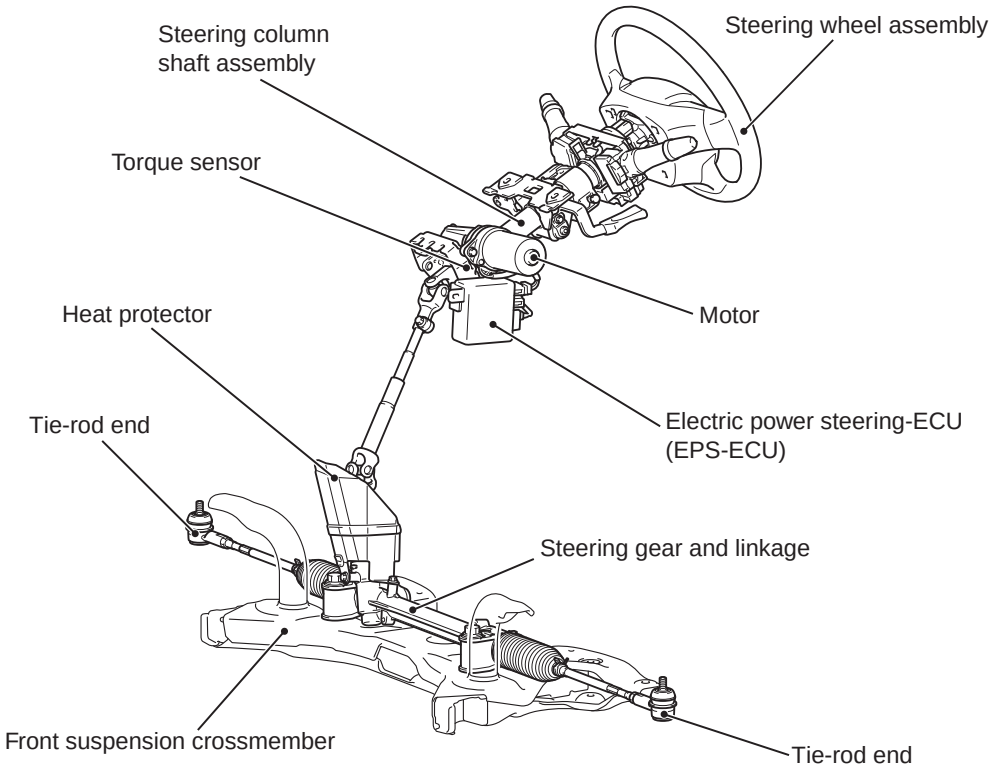

ACB03544 AC

CHECK OF ELECTRIC POWER STEERING WARNING LAMP

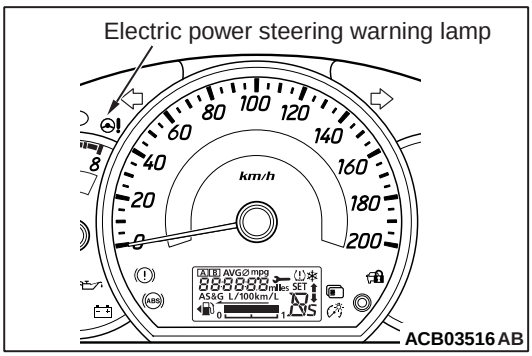

1. If the electric power steering warning lamp does not operate, the electric power steering system or the combination meter may be defective. Check for diagnosis code, and carry out diagnosis. If no diagnosis codes are stored, carry out the diagnosis while referring to the check items relevant to the electric power steering warning lamp in the trouble symptom chart.

CHECK STEERING LINKAGE FOR DAMAGE AND LOOSE CONNECTIONS (INCLUDING SEALS AND BOOTS)

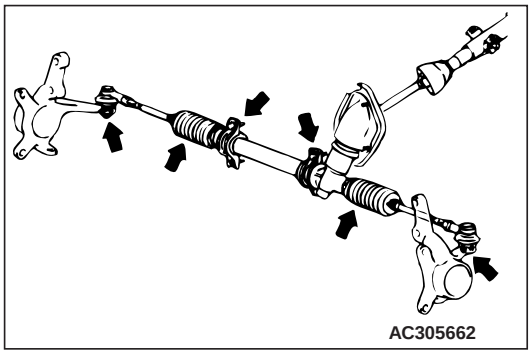

1. Move the steering wheel bit by bit to the left or right, and check to be sure that there is no play or looseness in the linkage coupling, that the installation is not loose, and that the rod or arm is not bent or damaged.

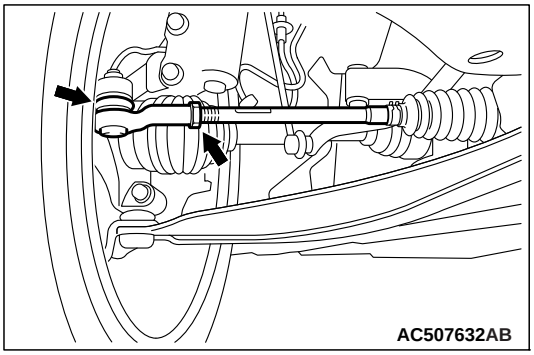

2. Using your fingers, press the dust cover to check for a crack or damage.
3. If there are any cracks in the dust cover or it is damaged, replace the tie-rod end.

NOTE: If the dust cover has a crack or damage, the ball joint could be damaged.

4. Check tie-rod end lock nut for looseness. If lock nut is loose, adjust toe-in and then tighten lock nut to the specified torque.

Tightening torque: 34 ± 5 N·m

GROUP 3

VISIBILITY

CONTENTS

3.1. FIELD OF VISION 3-2
3.2. CONDITION OF GLASS 3-2
3.3. REAR-VIEW MIRRORS OR DEVICES 3-2
3.4. WINDSCREEN WIPERS 3-2
3.5. WINDSCREEN WASHERS 3-2
3.6. DEMISTING SYSTEM (X)2 3-2

3.1. Field of vision

M6121100000040

"Not Applicable"

3.2. Condition of glass

M6121200000047

"Not Applicable"

3.3. Rear-view mirrors or devices

M6121300000044

"Not Applicable"

3.4. Windscreen wipers

M6121400000041

"Not Applicable"

3.5. Windscreen washers

M6121500000048

"Not Applicable"

3.6. Demisting system (X)2

M6121600000045

"Not Applicable"

GROUP 4

LAMPS, REFLECTORS AND ELECTRICAL EQUIPMENT

CONTENTS

4.1. HEADLAMPS 4-3
- 4.1.1. Condition and operation 4-3
- 4.1.2. Alignment 4-4
- 4.1.3. Switching 4-6
- 4.1.4. Compliance with requirements1 4-7
- 4.1.5. Levelling devices (where mandatory) 4-7
- 4.1.6. Headlamp cleaning device (where mandatory) 4-9

4.2. FRONT AND REAR POSITION LAMPS, SIDE MARKER LAMPS, END OUTLINE MARKER LAMPS AND DAYTIME RUNNING LAMPS 4-9
- 4.2.1. Condition and operation 4-9
- 4.2.2. Switching 4-10
- 4.2.3. Compliance with requirements1 4-10

4.3. STOP LAMPS 4-10
- 4.3.1. Condition and operation 4-10
- 4.3.2. Switching 4-10
- 4.3.3. Compliance with requirements1 4-12

4.4. DIRECTION INDICATOR AND HAZARD WARNING LAMPS 4-12
- 4.4.1. Condition and operation 4-12
- 4.4.2. Switching 4-12
- 4.4.3. Compliance with requirements1 4-12
- 4.4.4. Flashing frequency 4-12

4.5. FRONT AND REAR FOG LAMPS 4-13
- 4.5.1. Condition and operation 4-13
- 4.5.2. Alignment (X)2 4-13
- 4.5.3. Switching 4-13
- 4.5.4. Compliance with requirements1 4-13

4.6. REVERSING LAMPS 4-13
- 4.6.1. Condition and operation 4-13
- 4.6.2. Compliance with requirements1 4-13
- 4.6.3. Switching 4-13

4.7. REAR REGISTRATION PLATE LAMP 4-13
- 4.7.1. Condition and operation 4-13
- 4.7.2. Compliance with requirements1 4-13

4.8. RETRO-REFLECTORS, CONSPICUITY (RETRO REFLECTING) MARKINGS AND REAR MARKING PLATES 4-13
- 4.8.1. Condition 4-13
- 4.8.2. Compliance with requirements1 4-13

4.9. TELL-TALES MANDATORY FOR LIGHTING EQUIPMENT 4-14
- 4.9.1. Condition and operation 4-14
- 4.9.2. Compliance with requirements1 4-14

4.10. ELECTRICAL CONNECTIONS

BETWEEN TOWING VEHICLE AND TRAILER OR SEMI-TRAILER 4-14

4.11.ELECTRICAL WIRING. 4-14

4.12. NON OBLIGATORY LAMPS AND RETRO-REFLECTORS (X)2. 4-15

4.13. BATTERY(IES) 4-16

4.1. Headlamps

4.1.1. Condition and operation

M6131000100041

Construction diagram

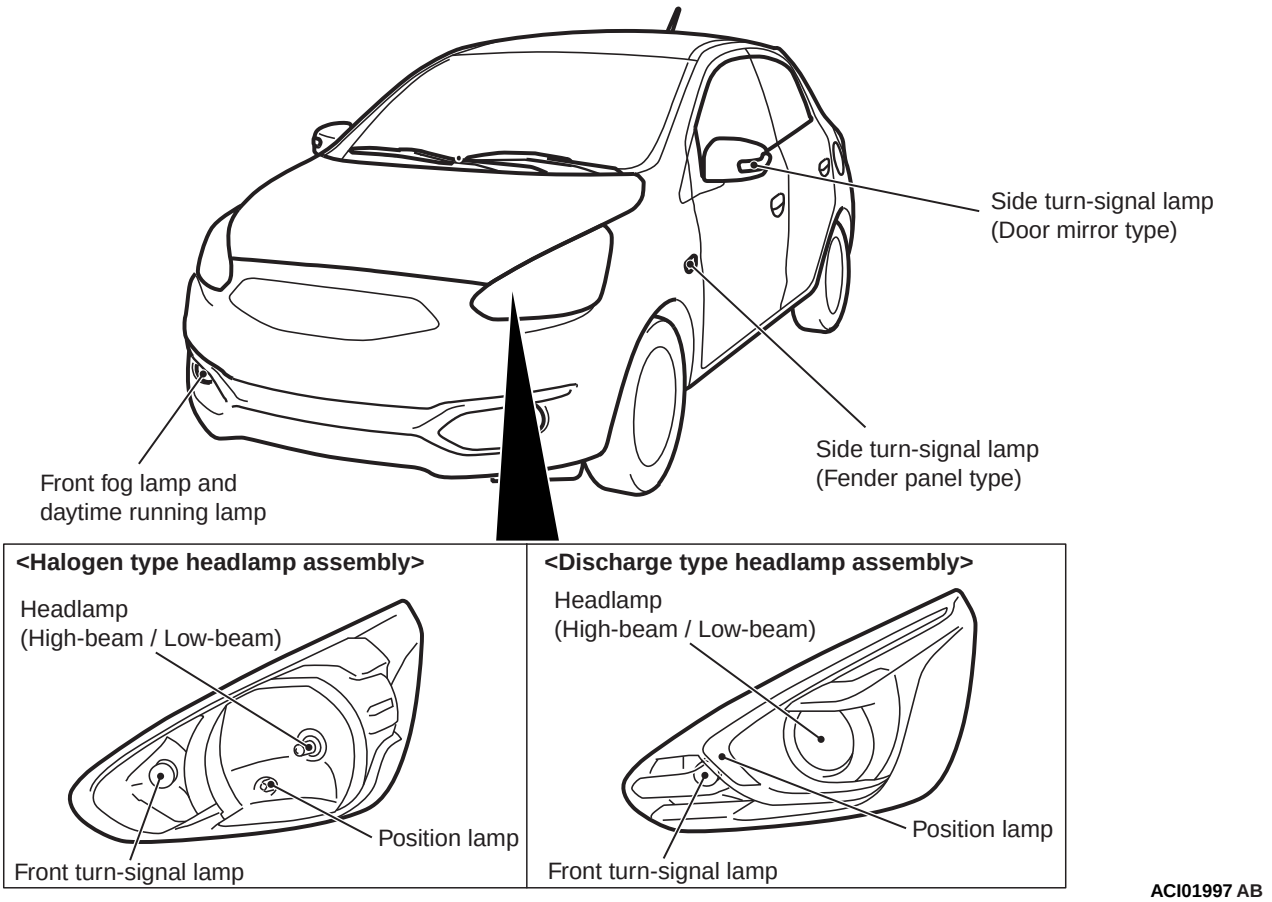

ACI01997 AB

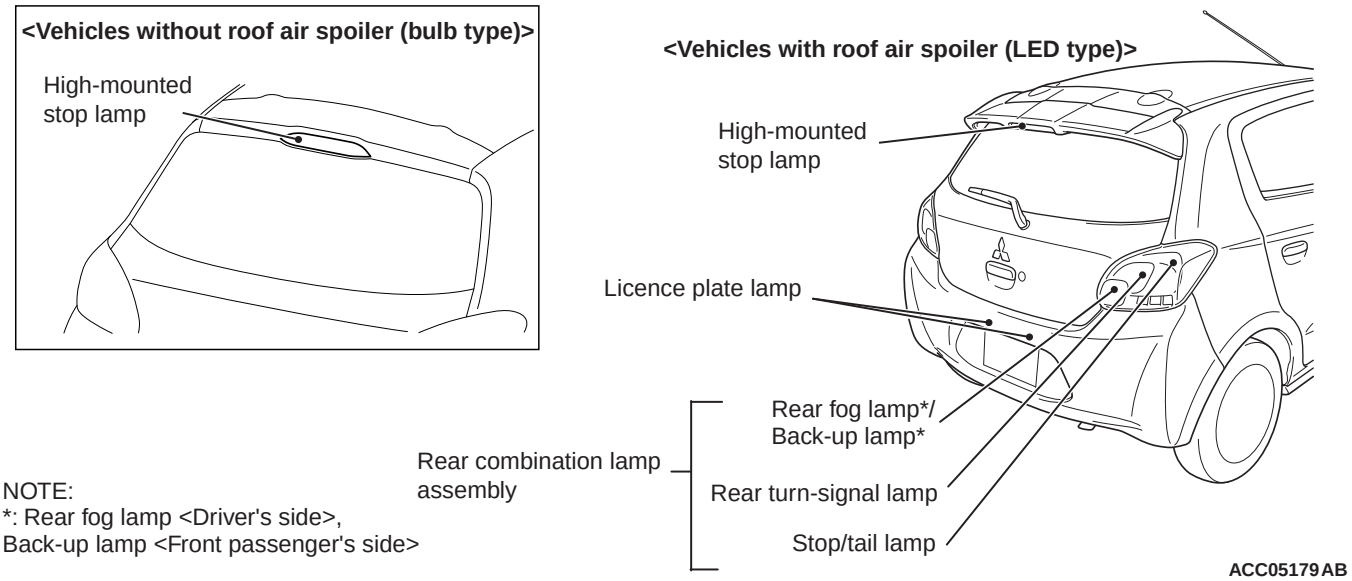

NOTE:
*: Rear fog lamp <Driver's side>,
Back-up lamp <Front passenger's side>

ACC05179 AB

4.1.2. Alignment

M6131000200048

PRE-AIMING INSTRUCTION

These conditions must be corrected before a satisfactory adjustment can be made.

- Inspect tyre inflation, and adjust if it is necessary.
- If the fuel tank is not filled up, put weight in the luggage compartment to make up for the fuel shortage so that the weight will become 90% of full-state weight or heavier. (0.8 kg per litter)
- There should be no other load in the vehicle other than driver or substituted weight of approximately 75 kg placed in driver's position.
- Turn the headlamp levelling switch to the switch position "0."
- Thoroughly clean the headlamp lenses.

<USING A BEAM SETTING EQUIPMENT>

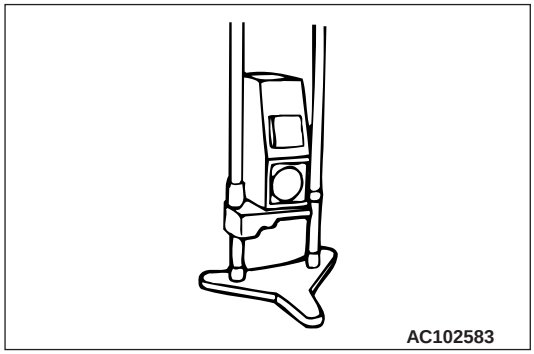
AC102583

1. The headlamps should be aimed with the proper beam setting equipment, and in accordance with the equipment manufacture's instructions.
2. Alternately turn the adjusting screw to adjust the headlamp aiming.

<USING A SCREEN>

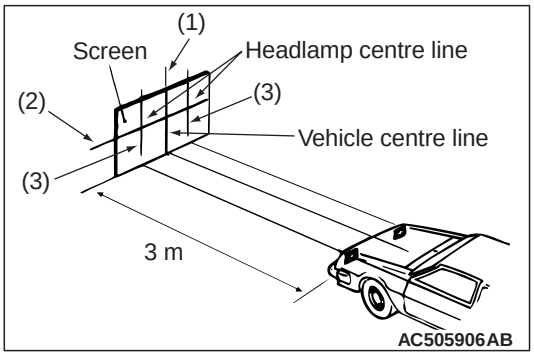

AC505906AB

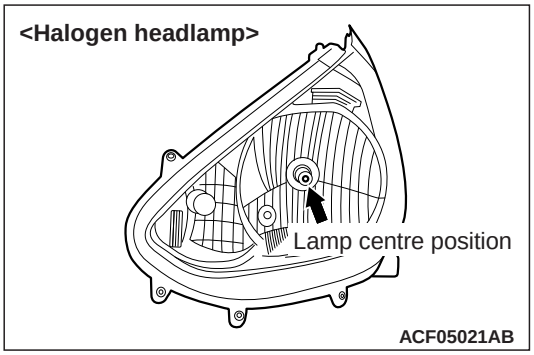

ACF05021AB

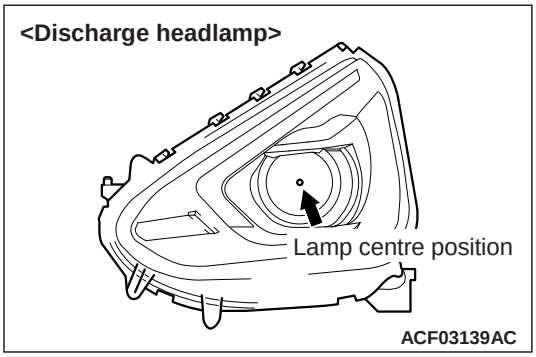

ACF03139AC

1. Place the vehicle on a level floor, perpendicular to a flat screen 3 m away from the lamp centre position of the low-beam.
2. Rock vehicle sideways to allow vehicle to assume its normal position.
3. To correct for distortion of the suspension, rock the bumpers on the front/rear side of the vehicle up and down three times alternately.
4. Run the engine at a speed of 2,000 r/min to charge the battery.
5. Four lines of adhesive tape (or equivalent markings) are required on screen or wall:
   (1) Position a vertical tape or mark so that it is aligned with the vehicle centre line.

(2) Measure the distance from the lamp centre position to the floor. Transfer the measurement to the screen. Horizontal tape or mark on the screen is for reference of vertical adjustment.
(3) Measure the distance from the centre line of the vehicle to the centre of each headlamp. Transfer the measurement to the screen. Vertical tape or mark on the screen with reference to the centre line of each headlamp bulb.

HEADLAMP ADJUSTMENT

⚠ CAUTION

- **Do not cover a headlamp for more than three minutes to prevent the plastic headlamp lens deformation.**
- **Be sure to adjust the aiming adjustment screw in the tightening direction.**

1. The low-beam headlamp should project on the screen upper edge of the beam (cut-off).

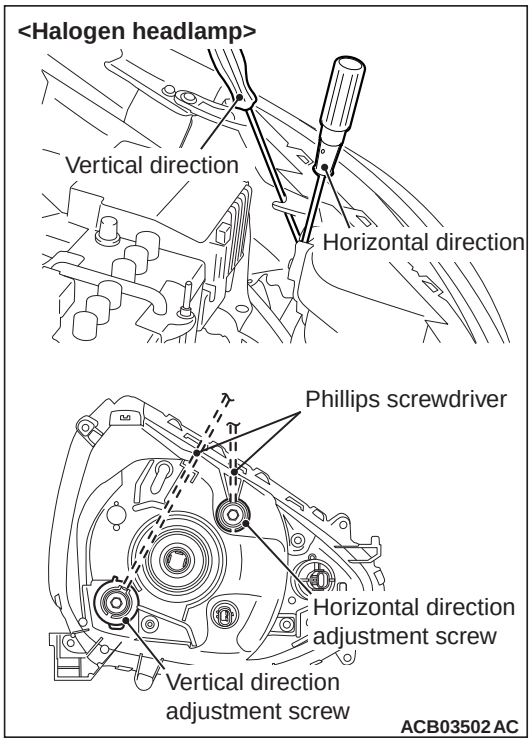

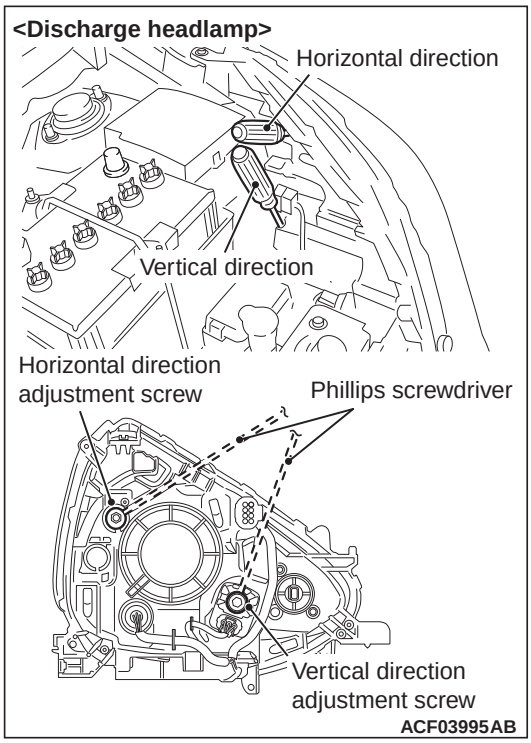

2. If not the case, turn the adjusting screws to achieve the specified low-beam cut-off location on the aiming screen.

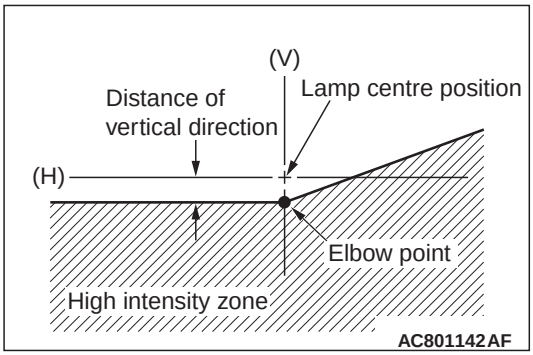

Standard value:

Vertical direction; 36 mm (0.69°) below horizontal (H)
Horizontal direction; Elbow point intersects the vertical line (V)

Limit:
Vertical direction; ±15 mm (±0.29°) from the horizontal cut-off line
Horizontal direction; ± 26 mm (±0.5°) from the vertical line (V)

NOTE: The illustration shows LH drive vehicles. For RH drive vehicles, it is symmetrical.

4.1.3. Switching

M6131000300045

Headlamps

NOTE:

- *Do not leave the lamps on for a long time while the engine is stationary (not running). A run-down battery could result.*
- *When it rains, or when the vehicle has been washed, the inside of the lens sometimes becomes foggy, but this does not indicate a functional problem. When the lamp is switched on, the heat will remove the fog. However, if water gathers inside the lamp, we recommend you to have checked.*
- *The Bi-xenon High Intensity Discharge (HID) headlamps (if so equipped) exhibit the following characteristics.*
  - *The light from the Bi-xenon HID headlamps can gradually change to bluish while in use.*
  - *Bulb life is shortened depending upon the frequency of use. If the bulb decreases in brightness, flashes, or turns a reddish colour, we recommend you to consult a MITSUBISHI MOTORS Authorised Service Point.*

Type1

Rotate the switch to turn on the lamps.

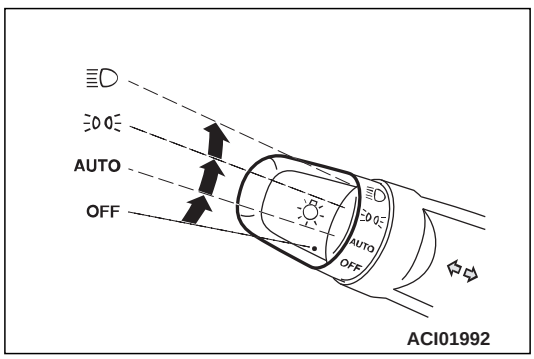

OFF	All lamps off
	Position, tail, licence plate and instrument panel lamps on
	Headlamps and other lamps go on

Type2

Rotate the switch to turn on the lamps.

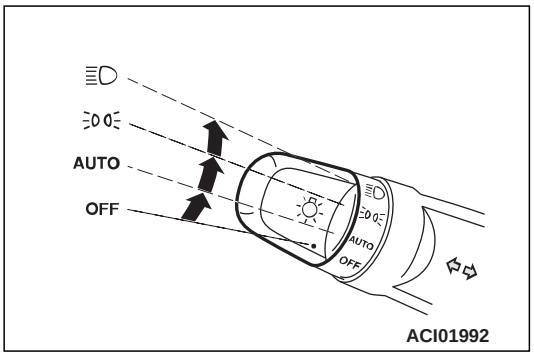

OFF	All lamps off
AUTO	With the ignition switch or the operation mode is in ON, headlamps, position, tail, licence plate, and instrument panel lamps turn on and off automatically in accordance with outside light level. All lamps turn off automatically when the ignition switch is turned to “OFF” position or the operation mode is put in OFF.
	Position, tail, licence plate and instrument panel lamps on
	Headlamps and other lamps go on

NOTE:

- *The sensitivity of the automatic on/off control can be adjusted. For further information, contact a MITSUBISHI MOTORS Authorised Service Point.*
- *When the headlamps are turned off by the automatic on/off control with the ignition switch in the "ON" position or the operation mode in ON, the front fog lamps (if so equipped) and rear fog lamps also go off. When the headlamps are subsequently turned back on by the automatic on/off control, the front fog lamps also come on but the rear fog lamp stay off. If you wish to turn the rear fog lamp back on, operate the switch again.*

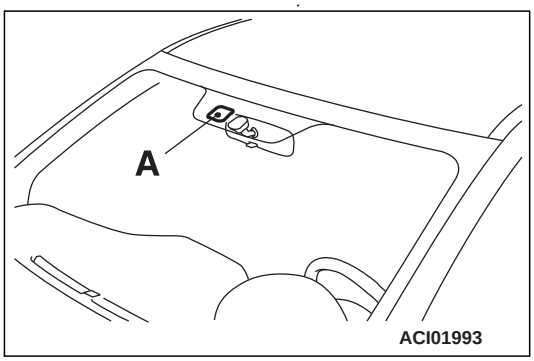

Do not cover the sensor (A) for the automatic on/off control by affixing a sticker or label to the windscreen.

- *If the lamps do not turn on or off with the switch in the "AUTO" position, manually operate the switch and we recommend you to have your vehicle checked.*

4.1.4. Compliance with requirements1.

M6131000400042

"Not Applicable"

4.1.5. Levelling devices (where mandatory)

M6131000500049

Headlamp manual levelling system

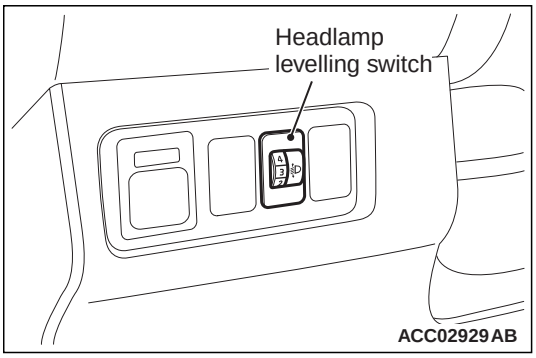

The beam direction of the headlamps changes according to the number of passengers and the amount of load. The headlamp levelling function is a system that allows the driver to change the direction of headlamp beam so that the drivers of oncoming cars are not dazzled by the headlamps. The headlamp levelling switch allows changing the direction in five steps: 0 to 4.

Relationship between the switch positions and the number of passengers/loads

Passenger and load	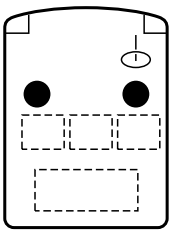 AC504772	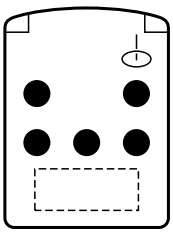 AC504773	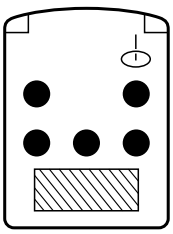 AC504774	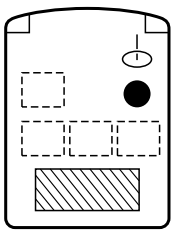 AC504775
	One or two passengers	Five passengers	Five passengers and luggage	Driver and heavy luggage
Switch position	0	2	3	3

OPERATION

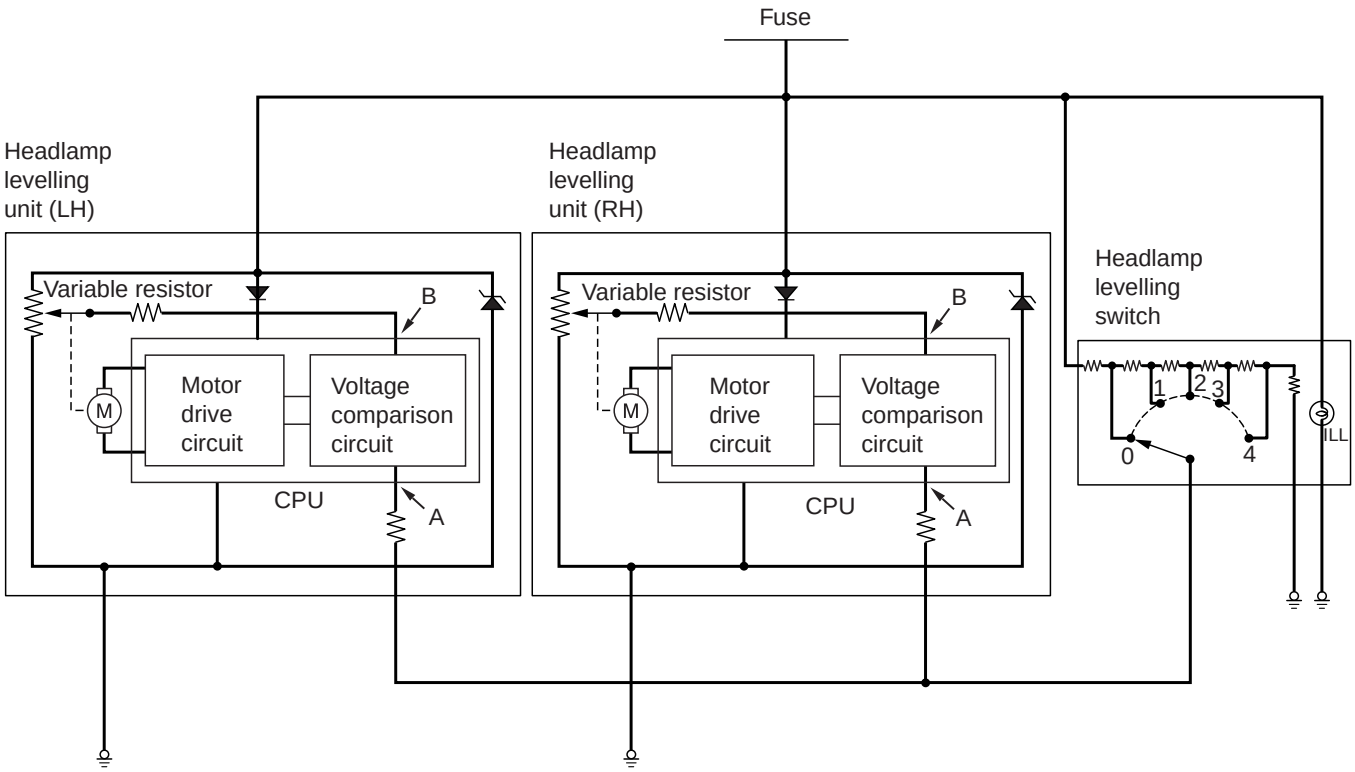

AC314086AB

1. The headlamp levelling switch increases the resistance as it is turned from 0 to 4. Turning the headlamp levelling switch changes the voltage at point A. When the headlamp levelling switch is turned from 0 to 4, the voltage at point A decreases. Upon detection of this voltage change, the headlamp levelling unit turns the motor to lower the beam direction. At this time, the resistance of the variable resistor in the headlamp assembly changes, and the voltage at point B decreases gradually. When the voltages at points A and B become equal, the headlamp levelling unit stops the motor.
2. Turning the headlamp levelling switch from 4 to 0 increases the voltage at point A, and then the headlamp levelling unit turns the motor in the direction opposite to that mentioned in Item 1, increasing the voltage at point B. When the voltages at points A and B become equal, the headlamp levelling unit stops the motor.
3. The headlamp levelling unit detects voltage changes caused by headlamp levelling switch operation, and turns the motor to change the directions of the headlamp reflectors for the adjustment of the headlamp beam direction.

4.1.6. Headlamp cleaning device (where mandatory)

M6131000600046

"Not Applicable"

4.2. Front and rear position lamps, side marker lamps, end outline marker lamps and daytime running lamps

4.2.1. Condition and operation

M6132000100044

Construction diagram

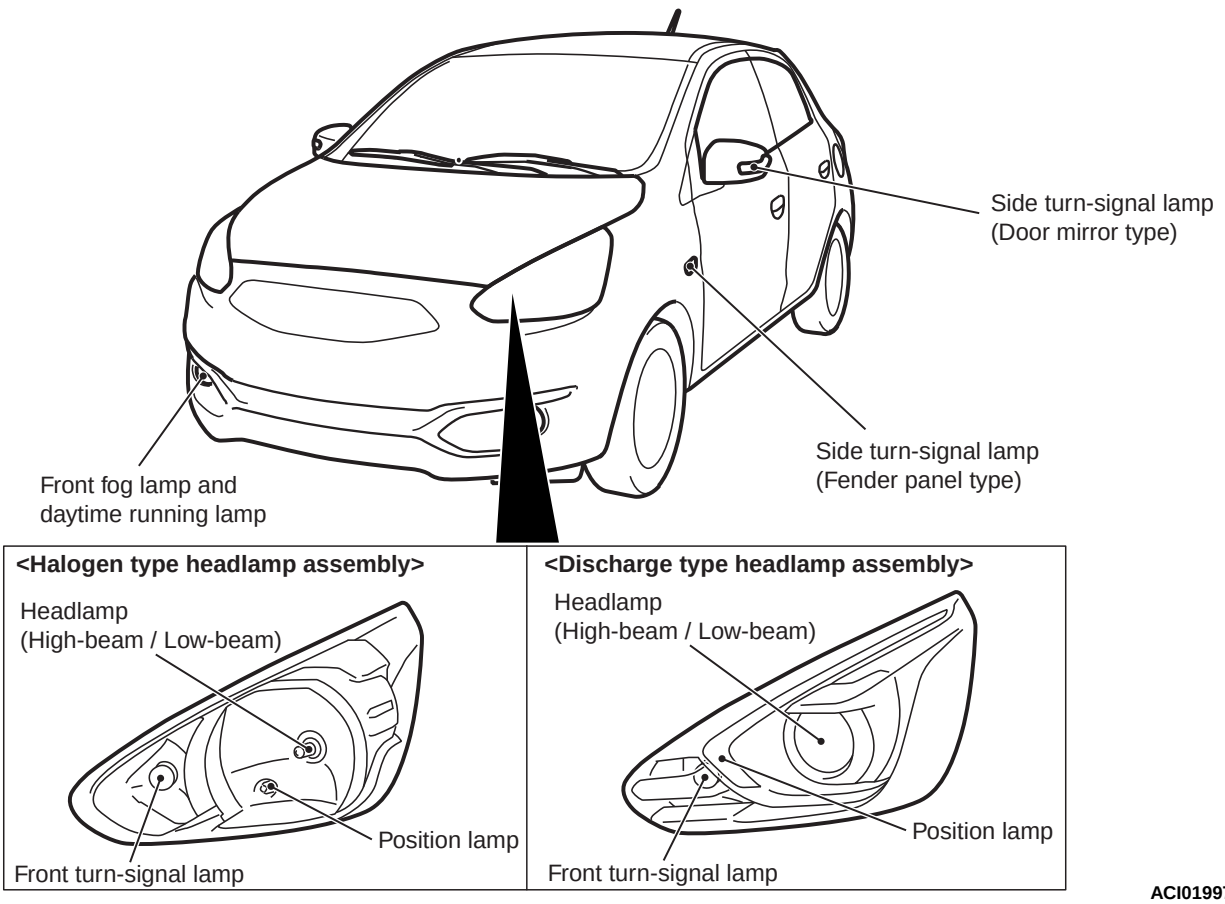

ACI01997 AB

<Vehicles without roof air spoiler (bulb type)>

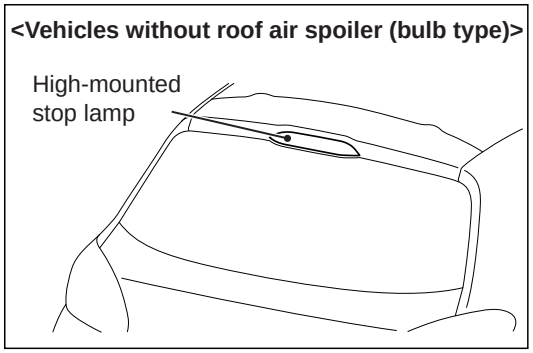

<Vehicles with roof air spoiler (LED type)>

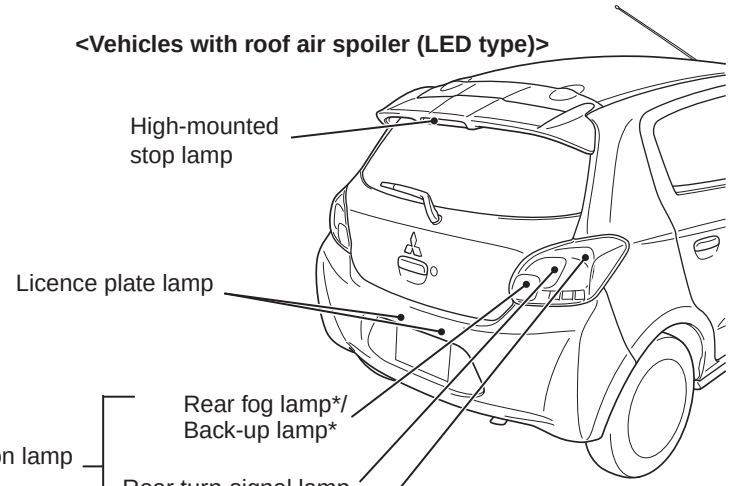

ACC05179AB

NOTE:
*: Rear fog lamp <Driver's side>,
Back-up lamp <Front passenger's side>

4.2.2. Switching

M6132000200041

"Not Applicable"

4.2.3. Compliance with requirements1

M6132000300048

"Not Applicable"

4.3. Stop Lamps

4.3.1. Condition and operation

M6133000100047

"Not Applicable"

4.3.2. Switching

M6133000200044

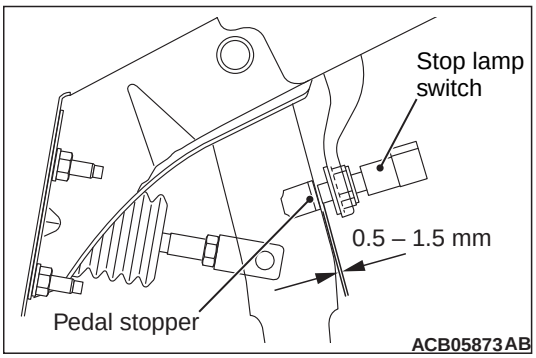

ACB05873AB

1. Check that the clearance between the stop lamp switch and the pedal stopper is as shown in the figure.

⚠ CAUTION

Make sure that the stop lamp is not illuminated when the brake pedal is not depressed.

STOP LAMP SWITCH CHECK

<TYPE A>

⚠ CAUTION

Do not apply grease or lubricant to the switch and the switch installation section to avoid malfunction of the switch. In addition, do not use gloves which have grease on them.

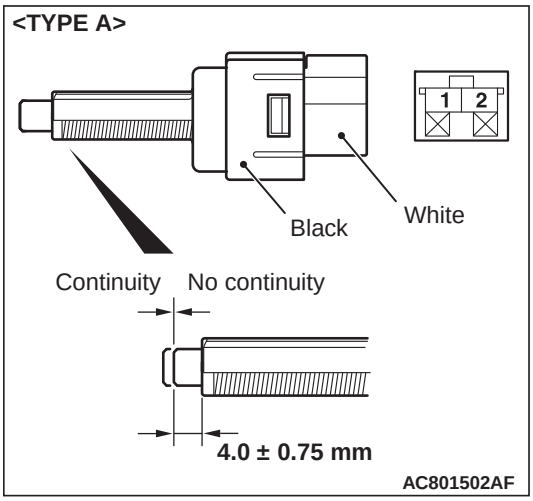

Check for continuity between the terminals of the switch.

Check condition	Terminal connector of tester	Normal condition
At free position	1 – 2	Continuity exists (2 Ω or less)
Press the plunger from the edge of the outer case by the dimension shown in the figure.	1 – 2	No continuity

<TYPE B, C>

⚠ CAUTION

Do not apply grease or lubricant to the switch and the switch installation section to avoid malfunction of the switch. In addition, do not use gloves which have grease on them.

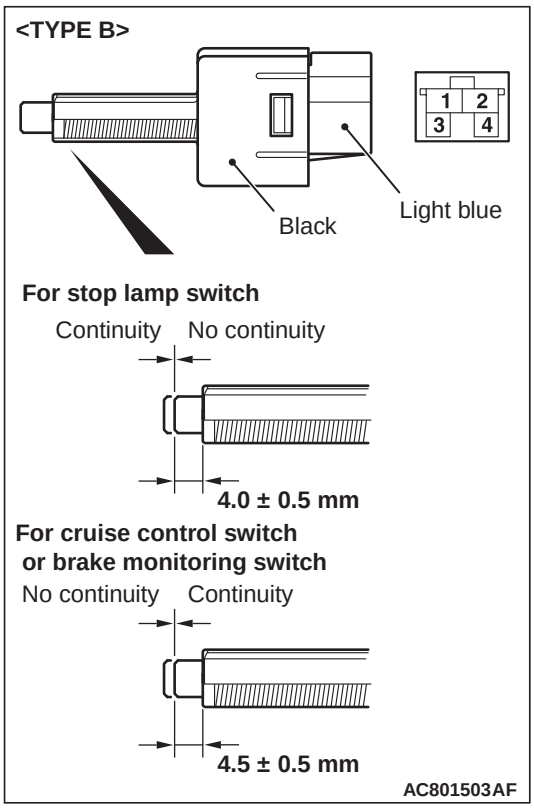

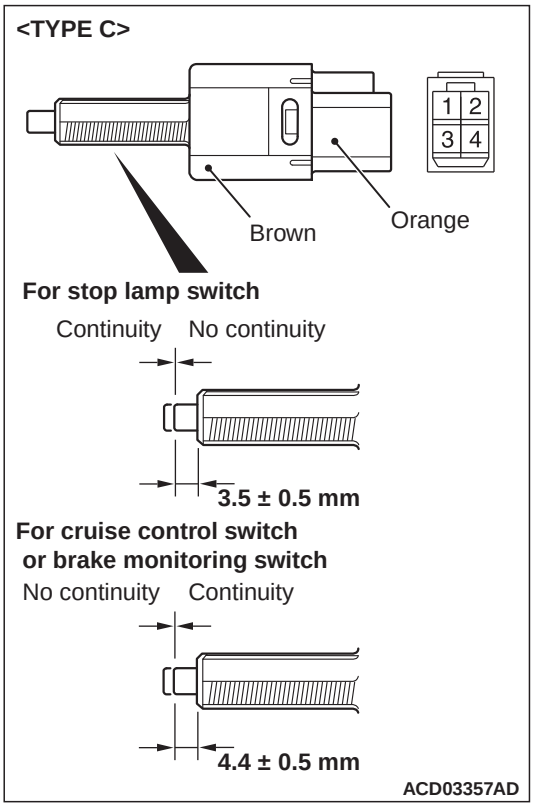

Check for continuity between the terminals of the switch.

Check condition	Terminal connector of tester	Normal condition
At free position	1 – 2 (for stop lamp switch)	Continuity exists (2 Ω or less)
	3 – 4 (for cruise control switch or brake monitoring switch)	No continuity
Press the plunger from the edge of the outer case by the dimension shown in the figure.	1 – 2 (for stop lamp switch)	No continuity
	3 – 4 (for cruise control switch or brake monitoring switch)	Continuity exists (2 Ω or less)

4.3.3. Compliance with requirements1.

M6133000300041

"Not Applicable"

4.4. Direction indicator and hazard warning lamps

4.4.1. Condition and operation

M6134000100040

"Not Applicable"

4.4.2. Switching

M6134000200047

"Not Applicable"

4.4.3. Compliance with requirements1.

M6134000300044

"Not Applicable"

4.4.4. Flashing frequency

M6134000400041

"Not Applicable"

4.5. Front and rear fog lamps

4.5.1. Condition and operation

M6135000100043

"Not Applicable"

4.5.2. Alignment (X)2

M6135000200040

"Not Applicable"

4.5.3. Switching

M6135000300047

"Not Applicable"

4.5.4. Compliance with requirements1.

M6135000400044

"Not Applicable"

4.6. Reversing lamps

4.6.1. Condition and operation

M6136000100046

"Not Applicable"

4.6.2. Compliance with requirements1

M6136000200043

"Not Applicable"

4.6.3. Switching

M6136000300040

"Not Applicable"

4.7. Rear registration plate lamp

4.7.1. Condition and operation

M6137000100049

"Not Applicable"

4.7.2. Compliance with requirements1

M6137000200046

"Not Applicable"

4.8. Retro-reflectors, conspicuity (retro reflecting) markings and rear marking plates

4.8.1. Condition

M6138000100042

"Not Applicable"

4.8.2. Compliance with requirements1

M6138000200049

"Not Applicable"

4.9. Tell-tales mandatory for lighting equipment

4.9.1. Condition and operation

M6139000100045

"Not Applicable"

4.9.2. Compliance with requirements1

M6139000200042

"Not Applicable"

4.10. Electrical connections between towing vehicle and trailer or semi-trailer

M6130100000048

"Not Applicable"

4.11.Electrical wiring

M6131100000041

“Query raised for this content”

4.12. Non obligatory lamps and retro-reflectors (X)2

M6131200000048

Construction diagram

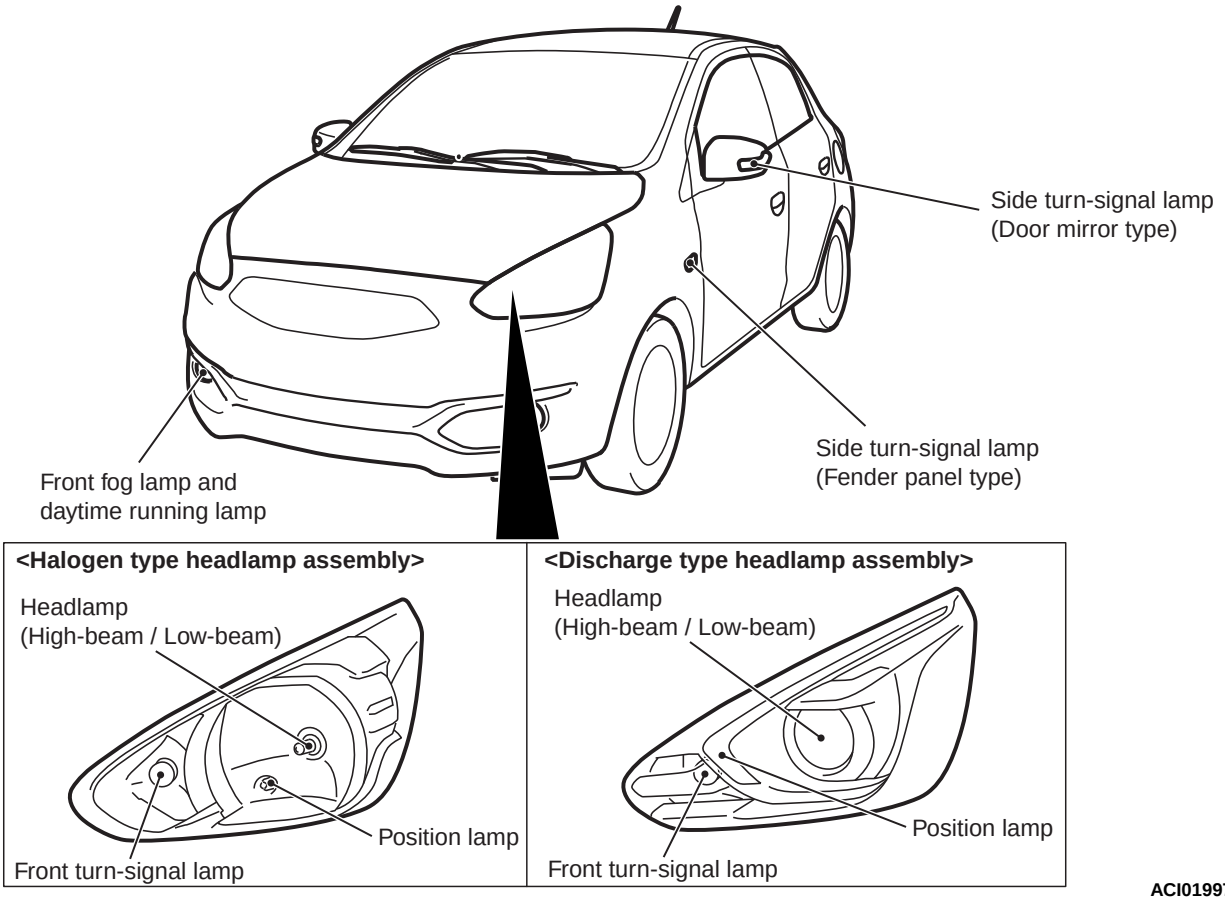

ACI01997 AB

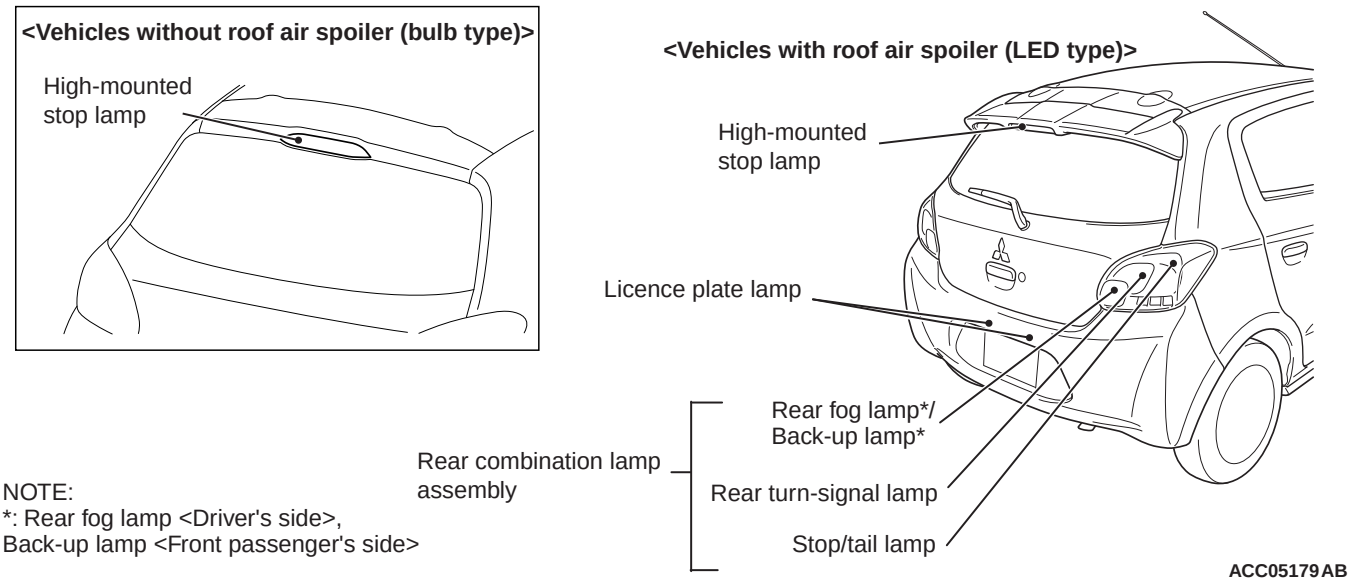

NOTE:
*: Rear fog lamp <Driver's side>,
Back-up lamp <Front passenger's side>

ACC05179 AB

4.13. Battery(ies)

M6131300000056

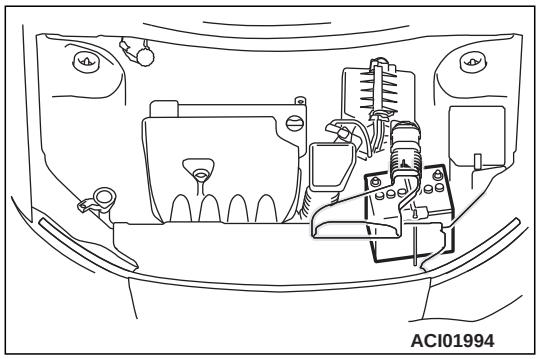

Item	Specifications	
Type	Q-85	80D23L
Voltage V	12	12
Capacity (5-hour rate) Ah	55	59
Electrolytic fluid specific gravity (fully charged state at 20°C)	1.250 – 1.290	1.220 – 1.290

GROUP 5

AXLES, WHEELS, TYRES AND SUSPENSION

CONTENTS

5.1. AXLES 5-2
5.1.1. Axles 5-2
5.1.2. Stub axles 5-6
5.1.3. Wheel bearings 5-6

5.2. WHEELS AND TYRES 5-7
5.2.1. Road wheel hub 5-7
5.2.2. Wheels 5-7
5.2.3. Tyres 5-7

5.3. SUSPENSION SYSTEM 5-12
5.3.1. Springs and stabiliser 5-12
5.3.2. Shock absorbers 5-12
5.3.2.1. efficiency testing of damping (X)2 . 5-12
5.3.3. Torque tubes, radius arms, wishbones and suspension arms 5-12
5.3.4. Suspension joints 5-12
5.3.5. Air suspension 5-12

5.1. Axles

5.1.1. Axles

M6140100100046

GENERAL INFORMATION

The front axle consists of front hub, wheel bearing, knuckles and driveshafts, and has the following features:

- The wheel bearing is a unit ball bearing (double-row angular contact ball bearing) which incorporates the oil seals and is highly resistant to thrust loads.
- The wheel bearing incorporates magnetic encoder for wheel speed sensing. <Vehicles with ABS>
- The driveshaft incorporates EBJ-ETJ type constant velocity joint <M/T>, VUJ-ETJ type constant velocity joint <CVT>.

NOTE:

- *EBJ: High Efficiency Compact Ball Joint*
- *ETJ: High Efficiency Compact Tripod Joint*
- *VUJ: Value Undercut Free Joint*

CONSTRUCTION DIAGRAM

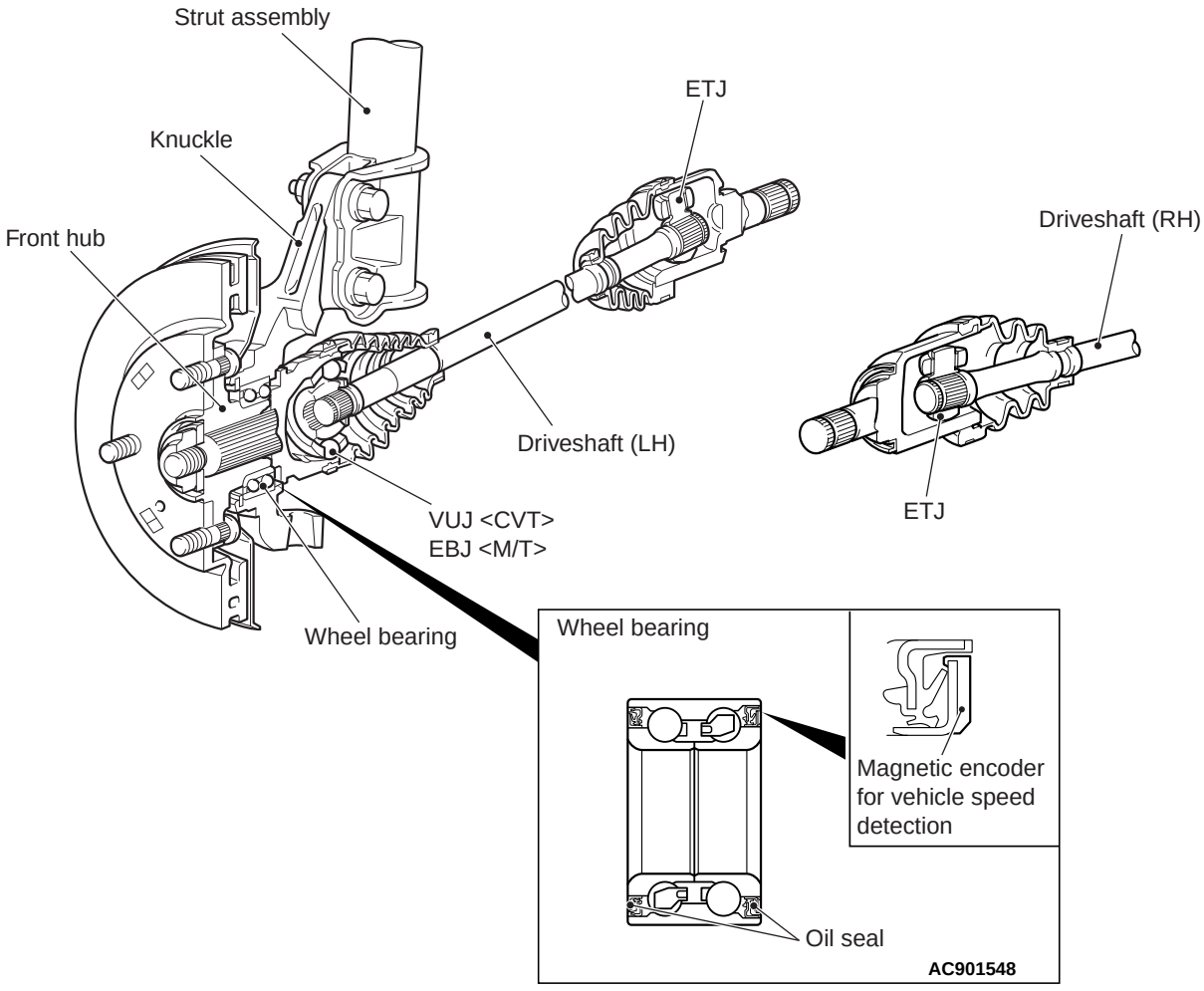

ACB03718 AB

SPECIFICATIONS

Item		CVT	M/T
Wheel bearing	Bearing type	Unit ball bearing (Double-row angular contact ball bearing)	
	Bearing (Outer diameter x inside diameter) mm	64 × 35	

Item			CVT	M/T
Driveshaft	Joint type	Outer	VUJ	EBJ
		Inner	ETJ	ETJ
	Length (joint to joint) × diameter mm	LH	420 × 20.1	
		RH	620.4 × 20.1	

GENERAL INFORMATION

The rear axle consists of rear wheel hub, wheel bearing, rear brake assembly and rear axle housing spindle, and has the following features:

- The wheel bearing is a unit ball bearing (double-row angular contact ball bearing) for reduced friction.
- The rear hub bearing incorporates pulse rotor for wheel speed sensing.

CONSTRUCTION DIAGRAM

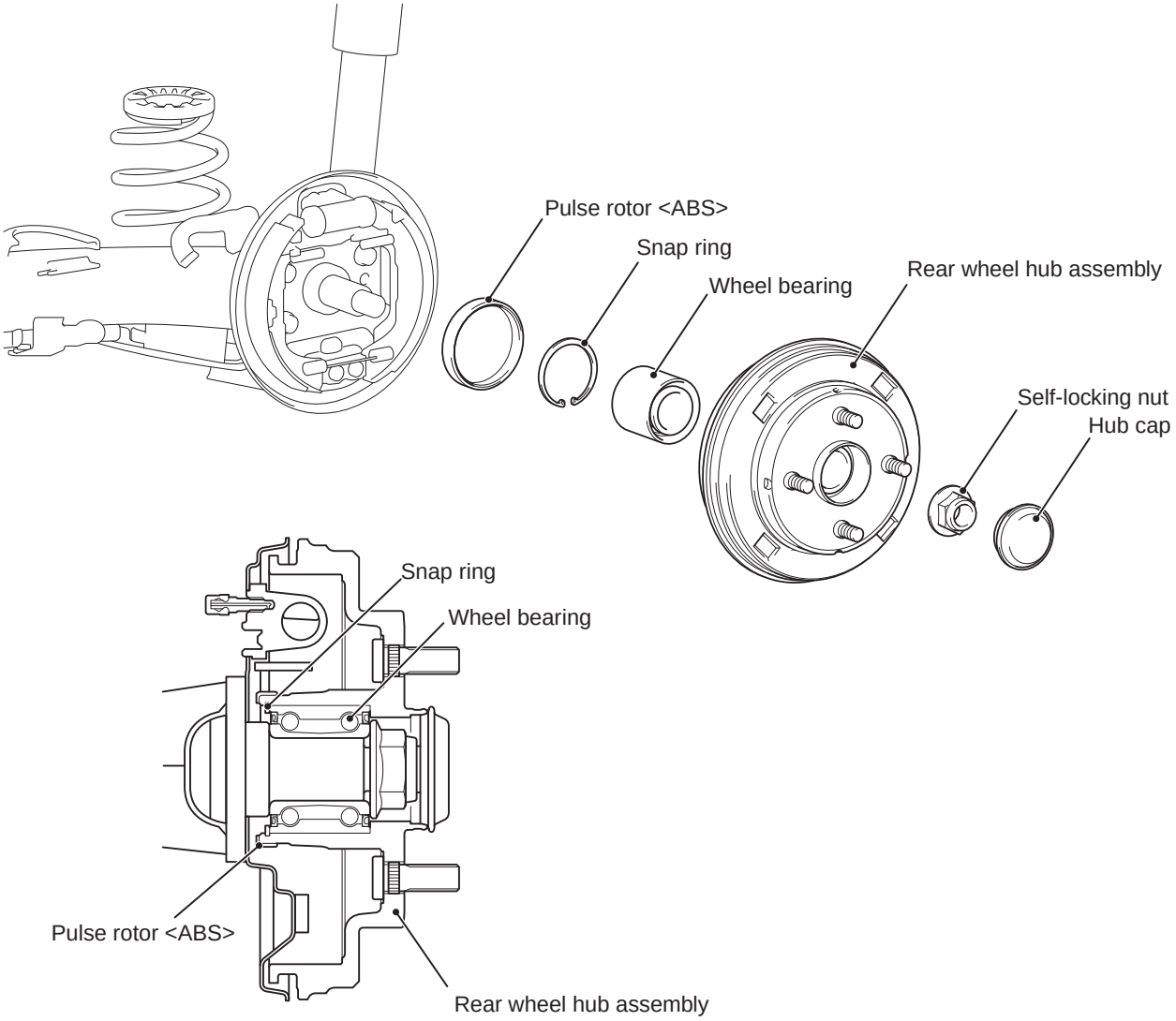

ACB03721AB

SPECIFICATION

Item		Specification
Wheel bearing	Bearing type	Unit ball bearing (double-row angular contact ball bearing)
	Bearing (Outer diameter x inside diameter) mm	58 × 28

CHECK SUSPENSION SYSTEM FOR DAMAGE AND LOOSENESS

1. Check each portion of suspension for damage visually.

FRONT SUSPENSION

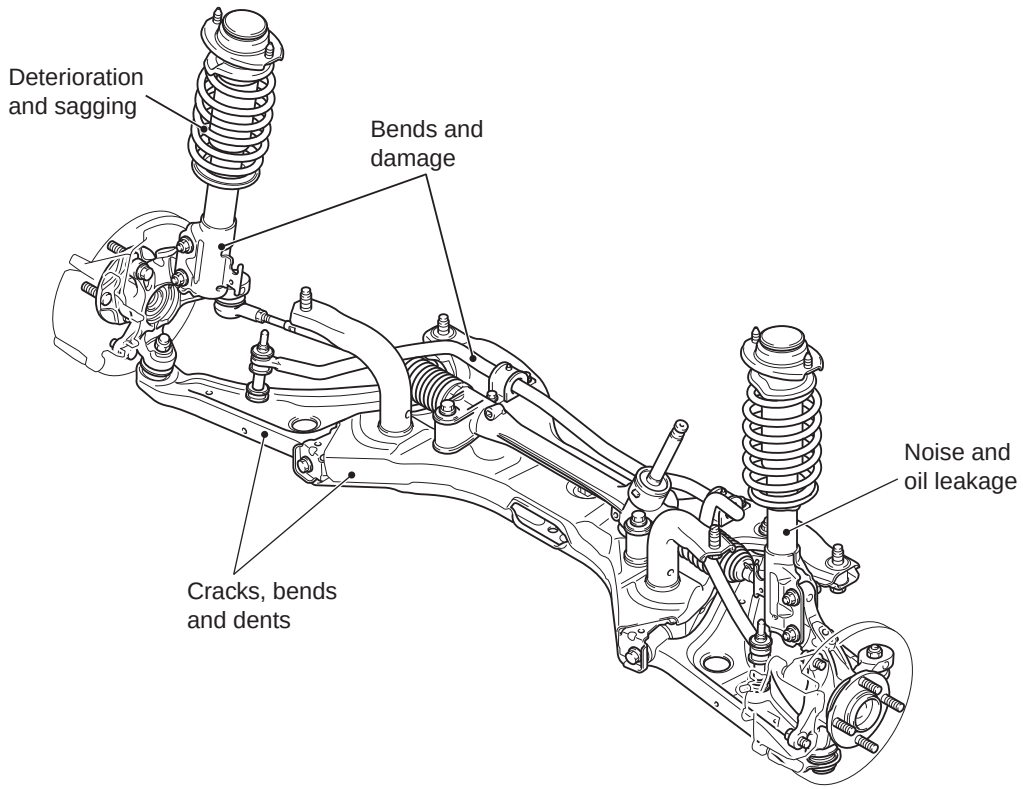

ACF04786AB

2. Check each installation bolt and nut for looseness by spanner or similar tool.

REAR SUSPENSION

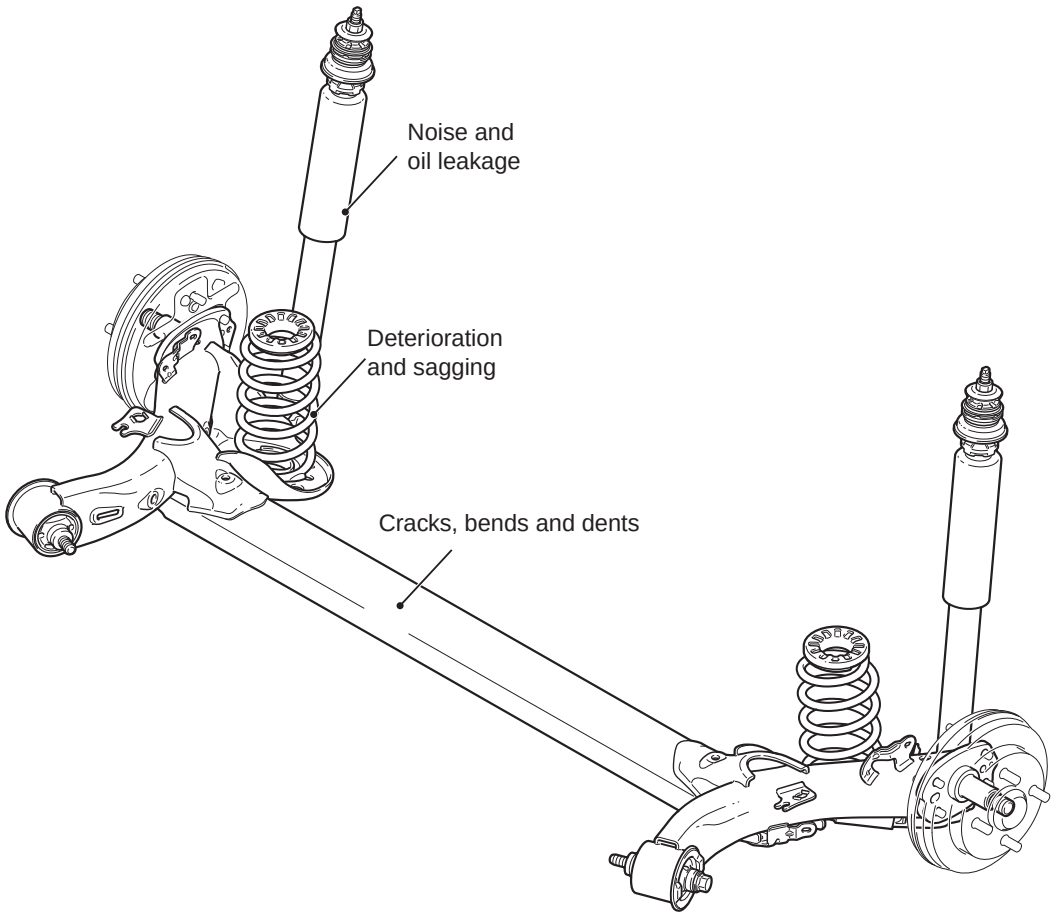

ACB03741 AC

CHECK SUSPENSION ARM BALL JOINTS FOR PLAY, AND DUST COVERS FOR DAMAGE

LOWER ARM BALL JOINT AXIAL PLAY CHECK

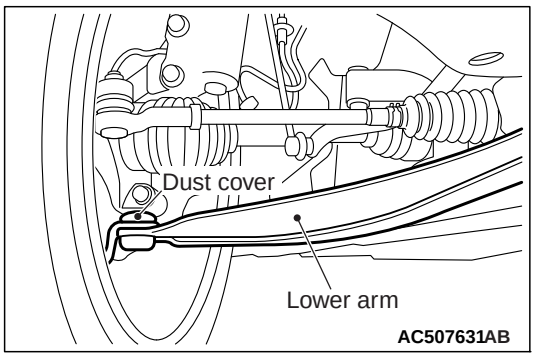

AC507631AB

1. Raise the vehicle.
2. Move the lower arm up and down with your hands to check for an excessive play in the axial direction of the ball joint. If there is an excessive play, replace the lower arm assembly.

DUST COVERS FOR DAMAGE

1. Press the lower arm ball joint dust cover with your finger to check that there are no cracks or damage in the lower arm ball joint cover.
2. If the lower arm ball joint dust cover is cracked or damaged, replace the lower arm assembly.

   NOTE: If the lower arm ball joint dust cover is cracked or damaged, it is possible that there may also be damage to the ball joint.

CHECK DRIVESHAFT BOOTS FOR DAMAGE

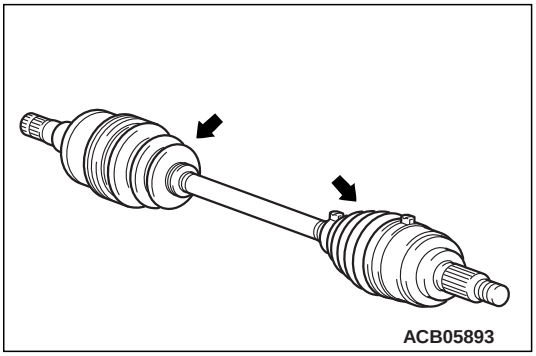

Check the driveshaft boots for damage.

CHECK FRONT AND REAR WHEEL BEARINGS FOR PLAY <FRONT WHEEL>

1. Remove the wheel assembly and the brake pad assembly.
2. Insert M12 plain washers, and tighten the nuts (M12 × 1.5) diagonally and evenly to the specified torque (98±10N·m) to secure the brake disc to the hub assembly.

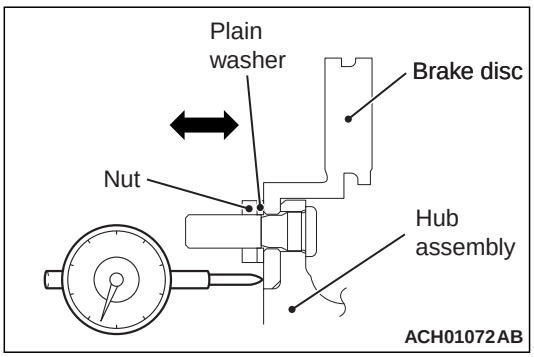

3. Set a dial gauge as shown in the figure. Move the hub in the axial direction and measure the axial play.

   Limit: 0.05 mm

4. On completion, install the wheel assembly and the brake pad assembly.

<REAR WHEEL>

1. Remove the hub cap.

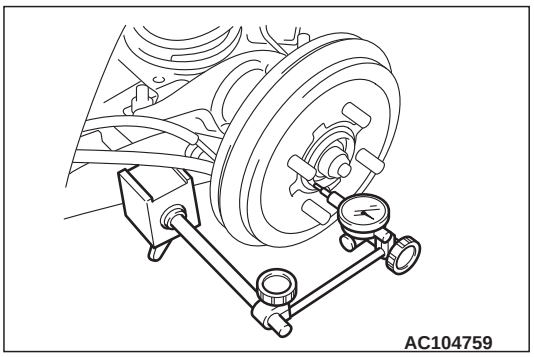

2. Set a dial gauge as shown in the figure. Move the hub in the axial direction and measure the play.

   Limit value: 0.05 mm

3. If the play exceeds the limit, replace the rear hub assembly.

5.1.2. Stub axles

M6140100200043

"Not Applicable"

5.1.3. Wheel bearings

M6140100300040

"Not Applicable"

5.2. Wheels and tyres

5.2.1. Road wheel hub

M6140200100043

"Not Applicable"

5.2.2. Wheels

M6140200200062

The wheels and tyres of the following specifications have been established.

SPECIFICATIONS

Road wheel and tyre

Item		Specification		
Wheel	Type	Steel type	Aluminium type	Aluminium type
	Size	14 × 4 1/2J	14 × 4 1/2J	15 × 5J
	Amount of wheel offset mm	46	46	46
	PCD mm	100	100	100
Tyre	Size	165/65R14 79S	165/65R14 79S	175/55R15 77V

NOTE: PCD indicates the pitch circle diameter of the wheel installation holes.

Spare wheel and tyre (Option)

Item		Specification	
Spare wheel	Type	Steel type	Aluminium type
	Size	14 × 4T	15 × 5J
	Amount of wheel offset mm	38	46
	PCD mm	100	100
Spare tyre	Size	T115/70D14 88M	175/55R15 77V

NOTE: PCD indicates the pitch circle diameter of the wheel installation holes.

5.2.3. Tyres

M6140200300069

The wheels and tyres of the following specifications have been established.

SPECIFICATIONS

Road wheel and tyre

Item		Specification		
Wheel	Type	Steel type	Aluminium type	Aluminium type
	Size	14 × 4 1/2J	14 × 4 1/2J	15 × 5J
	Amount of wheel offset mm	46	46	46
	PCD mm	100	100	100
Tyre	Size	165/65R14 79S	165/65R14 79S	175/55R15 77V

NOTE: PCD indicates the pitch circle diameter of the wheel installation holes.

Spare wheel and tyre (Option)

Item		Specification	
Spare wheel	Type	Steel type	Aluminium type
	Size	14 × 4T	15 × 5J
	Amount of wheel offset mm	38	46
	PCD mm	100	100
Spare tyre	Size	T115/70D14 88M	175/55R15 77V

NOTE: PCD indicates the pitch circle diameter of the wheel installation holes.

TYRE PRESSURE MONITORING SYSTEM (TPMS)

When the tyre pressure becomes under the specified value, the TPMS function warns the driver of that state by illuminating the TPMS warning lamp.

SYSTEM CONFIGURATION

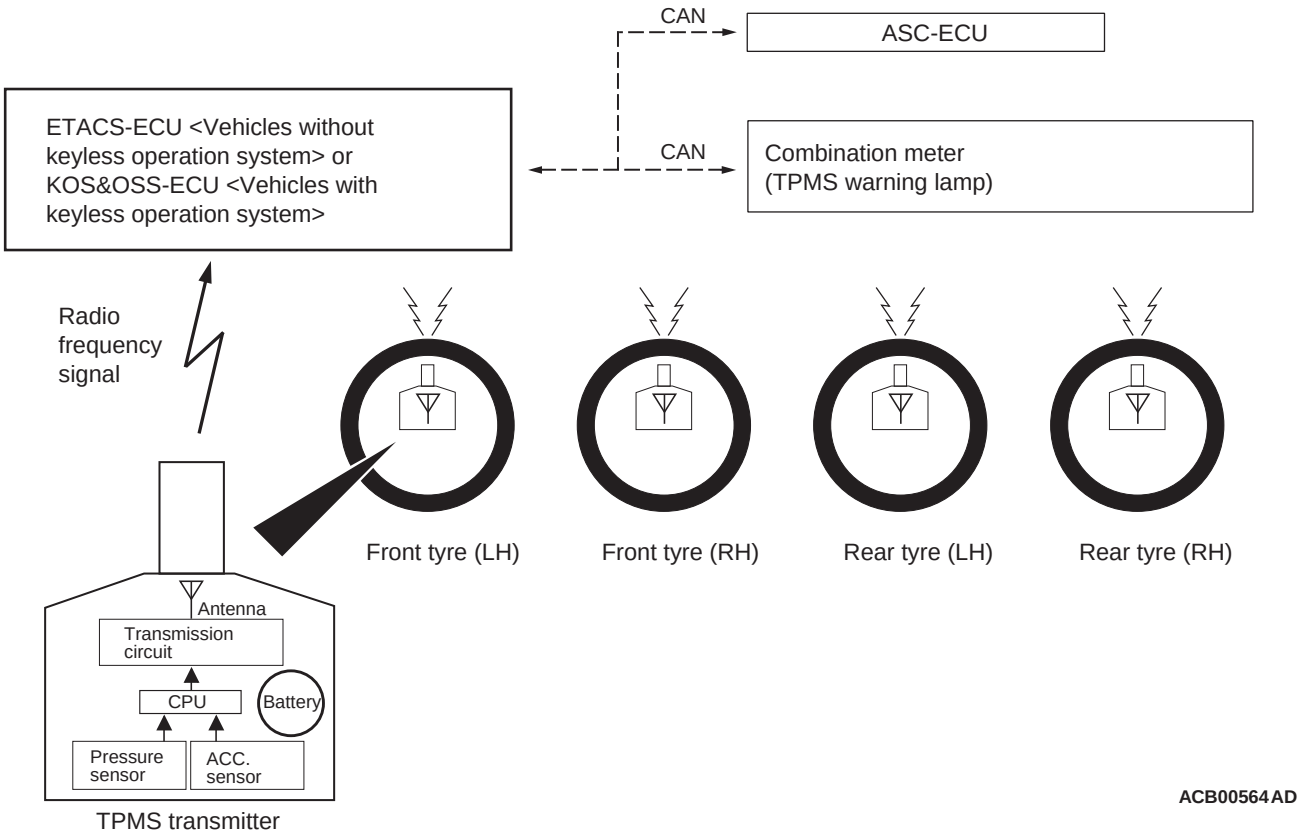

OPERATION

- The signals from the TPMS transmitter are received by the ETACS-ECU <Vehicles without keyless operation system> or KOS&OSS-ECU <Vehicles with keyless operation system>.
- ETACS-ECU <Vehicles without keyless operation system> or KOS&OSS-ECU <Vehicles with keyless operation system> processes input signals from each TPMS transmitter as well as vehicle speed signals from the ASC-ECU. When the road tyre pressure is low, ETACS-ECU <Vehicles without keyless operation system> or KOS&OSS-ECU <Vehicles with keyless operation system> sends a warning signal causing the TPMS warning lamp to be illuminated. When the TPMS has

problems, ETACS-ECU <Vehicles without keyless operation system> or KOS&OSS-ECU <Vehicles with keyless operation system> sends a warning signal causing the TPMS warning lamp to be flashed*.

*NOTE: *: Change to continuous illumination after flashing for about 1 minute.*

- For 3 seconds after the ignition switch is turned to the "ON" position, ETACS-ECU <Vehicles without keyless operation system> or KOS&OSS-ECU <Vehicles with keyless operation system> illuminates the TPMS warning lamp to check any breaks in the TPMS warning lamp circuit.
- By connecting the M.U.T.-III to the diagnosis connector, data stored in ETACS-ECU <Vehicles without keyless operation system> or KOS&OSS-ECU <Vehicles with keyless operation system> (data of tyre pressure and tyre pressure sensor ID, the alarm status and warning history, etc.) can be displayed and tyre pressure sensor ID can be registered.

NOTE: If the TPMS transmitter is replaced, register the ID codes of all the TPMS transmitters again using the M.U.T.-III.

TPMS WARNING LAMP CHECK

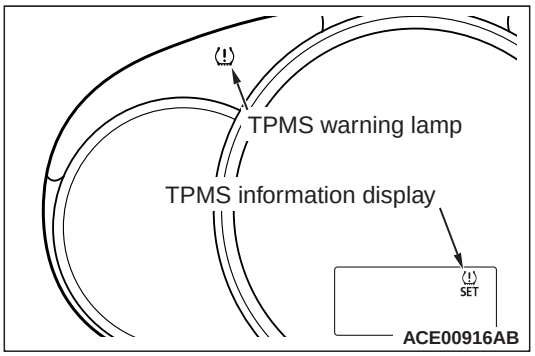

1. Check that the TPMS warning lamp illuminates for approximately 3 seconds when the ignition switch is turned to the "ON" position.
2. Check that it illuminates for approximately three seconds and then goes out.
3. If the TPMS fails or the tyre pressure is low, ETACS-ECU <vehicles without Keyless Operation System> or KOS&OSS-ECU <vehicles with Keyless Operation System> warns the driver of that state by the TPMS warning lamp and the TPMS information display in the combination meter.

WARNING AND WARNING INDICATOR LIST

Item	Display content	State	Warning operation		Warning cancellation condition (when any of the condition met)
			TPMS information display	TPMS warning lamp	
TPMS warning lamp bulb open circuit check	Not displayed	The power supply mode is other than OFF ON.	–	Illuminates for 3 seconds.	3 seconds have passed after the TPMS warning lamp is lit.
Tyre pressure alarm	 AC809643	The received tyre pressure value is under the alarm ON threshold value.	Symbol is displayed.	Illuminates.	The received tyre pressure value is over the alarm OFF threshold value.
Low tyre inflation pressure warning threshold value reset	Not displayed	Low tyre inflation pressure warning threshold value reset is activated.	–	Flashes slowly.	When a signal from each tyre has been received and low tyre inflation pressure warning threshold value reset has been completed.

Item		Display content	State	Warning operation		Warning cancellation condition (when any of the condition met)
				TPMS information display	TPMS warning lamp	
TPMS failure warning	ID not stored	 AC809643	The TPMS transmitter ID is not registered in the ETACS-ECU.	Symbol is displayed.	Flashes*	ID is registered normally.
	Defective EEPROM		Abnormality of data in the EEPROM of the ETACS-ECU is detected.			Data in the EEPROM of the ETACS-ECU <vehicles without keyless operation system> or KOS&OSS-ECU <vehicles with Keyless Operation System> is checked to be normal.
	Problem in signal reception		The signals from TPMS transmitters cannot be received while driving for about 10 minutes.			The signal from the TPMS transmitter that was warned is received.
	Defective sensor		The sensor failure signal is received from the TPMS transmitter.			A normal signal is received from the TPMS transmitter that was warned.

Item		Display content	State	Warning operation		Warning cancellation condition (when any of the condition met)
				TPMS information display	TPMS warning lamp	
TPMS failure warning	ID not stored	 AC809643	The TPMS transmitter ID is not registered in the ETACS-ECU.	Symbol is displayed.	Flashes*	ID is registered normally.
	Defective EEPROM		Abnormality of data in the EEPROM of the ETACS-ECU is detected.			Data in the EEPROM of the ETACS-ECU <vehicles without keyless operation system> or KOS&OSS-ECU <vehicles with Keyless Operation System> is checked to be normal.
	Problem in signal reception		The signals from TPMS transmitters cannot be received while driving for about 20 minutes.			The signal from the TPMS transmitter that was warned is received.

5.3. Suspension system

5.3.1. Springs and stabiliser

M6140300100040

"Not Applicable"

5.3.2. Shock absorbers

M6140300200047

"Not Applicable"

5.3.2.1. efficiency testing of damping (X)2

M6140310100041

"Not Applicable"

5.3.3. Torque tubes, radius arms, wishbones and suspension arms

M6140300300044

"Not Applicable"

5.3.4. Suspension joints

M6140300400041

"Not Applicable"

5.3.5. Air suspension

M6140300500048

"Not Applicable"

GROUP 6

CHASSIS AND CHASSIS ATTACHMENTS

CONTENTS

6.1. CHASSIS OR FRAME AND ATTACHMENTS 6-2

6.1.1. General condition 6-2
6.1.2. Exhaust pipes and silencers 6-2
6.1.3. Fuel tank and pipes (including heating fuel tank and pipes) 6-2
6.1.4. Bumpers, lateral protection and rear underrun devices 6-2
6.1.5. Spare wheel carrier (if fitted) 6-2
6.1.6. Mechanical coupling and towing device 6-2
6.1.7. Transmission 6-2
6.1.8. Engine mountings 6-3
6.1.9 Engine performance (X) 2 6-3

6.2. CAB AND BODYWORK 6-3

6.2.1. Condition 6-3
6.2.2. Mounting 6-3
6.2.3. Doors and door catches 6-3
6.2.4. Floor 6-3
6.2.5. Driver's seat 6-3
6.2.6. Other seats 6-3
6.2.7. Driving controls 6-3
6.2.8. Cab steps 6-3
6.2.9. Other interior and exterior fittings and equipment 6-3
6.2.10. Mudguards (wings), spray suppression devices 6-3
6.2.11. Stand 6-3
6.2.12. Handgrips and footrests 6-3

6.1. Chassis or frame and attachments

6.1.1. General condition

M6150100100047

"Not Applicable"

6.1.2. Exhaust pipes and silencers

M6150100200044

"Not Applicable"

6.1.3. Fuel tank and pipes (including heating fuel tank and pipes)

M6150100300041

CONSTRUCTION DIAGRAM

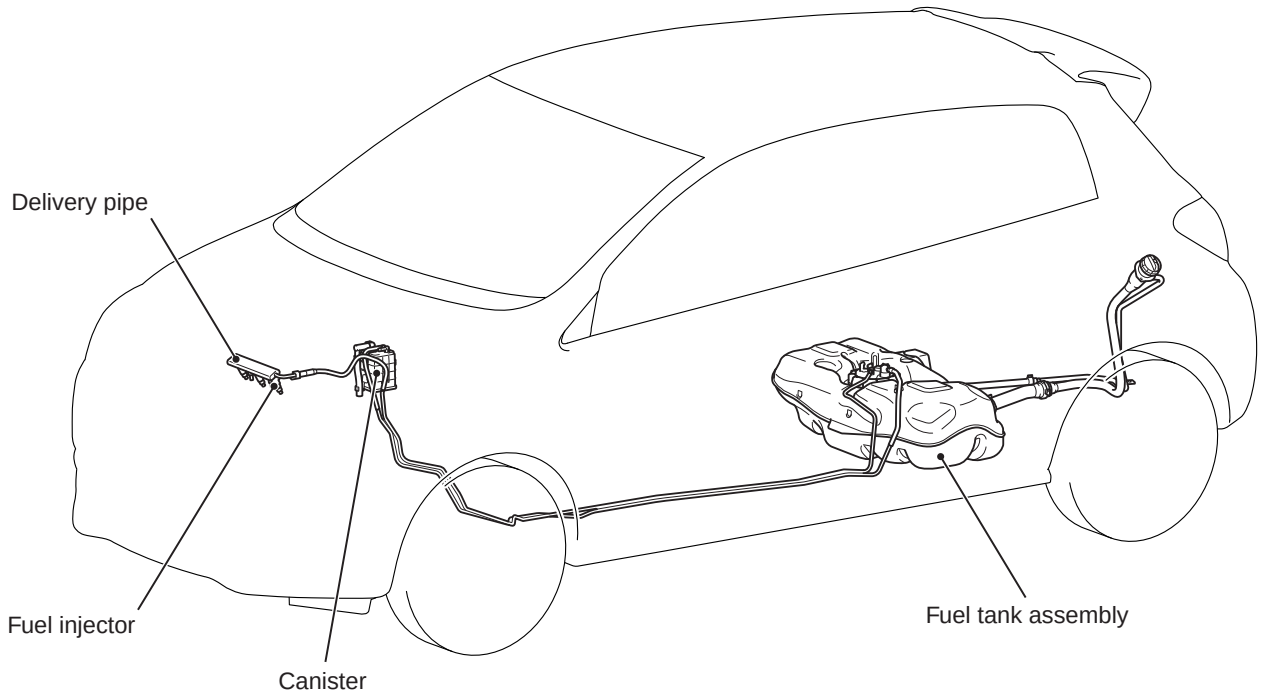

ACB02907AB

6.1.4. Bumpers, lateral protection and rear underrun devices

M6150100400048

"Not Applicable"

6.1.5. Spare wheel carrier (if fitted)

M6150100500045

"Not Applicable"

6.1.6. Mechanical coupling and towing device

M6150100600042

"Not Applicable"

6.1.7. Transmission

M6150100700049

"Not Applicable"

6.1.8. Engine mountings

M6150100800046

"Not Applicable"

6.1.9 Engine performance (X) 2

M6150100900043

“Query raised for this content”

6.2. Cab and bodywork

6.2.1. Condition

M6150200100044

"Not Applicable"

6.2.2. Mounting

M6150200200041

"Not Applicable"

6.2.3. Doors and door catches

M6150200300048

"Not Applicable"

6.2.4. Floor

M6150200400045

"Not Applicable"

6.2.5. Driver's seat

M6150200500042

"Not Applicable"

6.2.6. Other seats

M6150200600049

- Max Number of seats total (excluding driver's seat) - 4
- Number of rear-facing seats - 0

6.2.7. Driving controls

M6150200700046

"Not Applicable"

6.2.8. Cab steps

M6150200800043

"Not Applicable"

6.2.9. Other interior and exterior fittings and equipment

M6150200900040

"Not Applicable"

6.2.10. Mudguards (wings), spray suppression devices

M6150201000040

"Not Applicable"

6.2.11. Stand

M6150201100047

"Not Applicable"

6.2.12. Handgrips and footrests

M6150201200044

"Not Applicable"

GROUP 7

OTHER EQUIPMENT

CONTENTS

7.1. SAFETY-BELTS/BUCKLES AND RESTRAINT SYSTEMS (AS REGARDS L CATEGORY: L6/L7). 7-2

7.1.1. Security of safety-belts/buckles mounting 7-2

7.1.2. Condition of safety-belts/buckles. . . . 7-3

7.1.3. Safety belt load limiter. 7-4

7.1.4. Safety belt Pre-tensioners. 7-5

7.1.5. Airbag 7-10

7.1.6. SRS Systems 7-15

7.2. FIRE EXTINGUISHER (X)2. 7-20

7.3. LOCKS AND ANTI-THEFT DEVICE 7-20

7.4. WARNING TRIANGLE (IF REQUIRED) (X)2. 7-20

7.5. FIRST AID KIT. (IF REQUIRED) (X)2 7-20

7.6. WHEEL CHOCKS (WEDGES) (IF REQUIRED) (X)2. 7-20

7.7. AUDIBLE WARNING DEVICE. . . 7-20

7.8. SPEEDOMETER 7-20

7.9. TACHOGRAPH (IF FITTED/REQUIRED) 7-20

7.10. SPEED LIMITATION DEVICE (IF FITTED/ REQUIRED) 7-20

7.11 ODOMETER IF AVAILABLE (X)2 7-21

7.12 ELECTRONIC STABILITY CONTROL (ESC) IF FITTED/REQUIRED. 7-21

7.1. Safety-belts/buckles and restraint systems (as regards L category: L6/L7)

7.1.1. Security of safety-belts/buckles mounting

M6160100100048

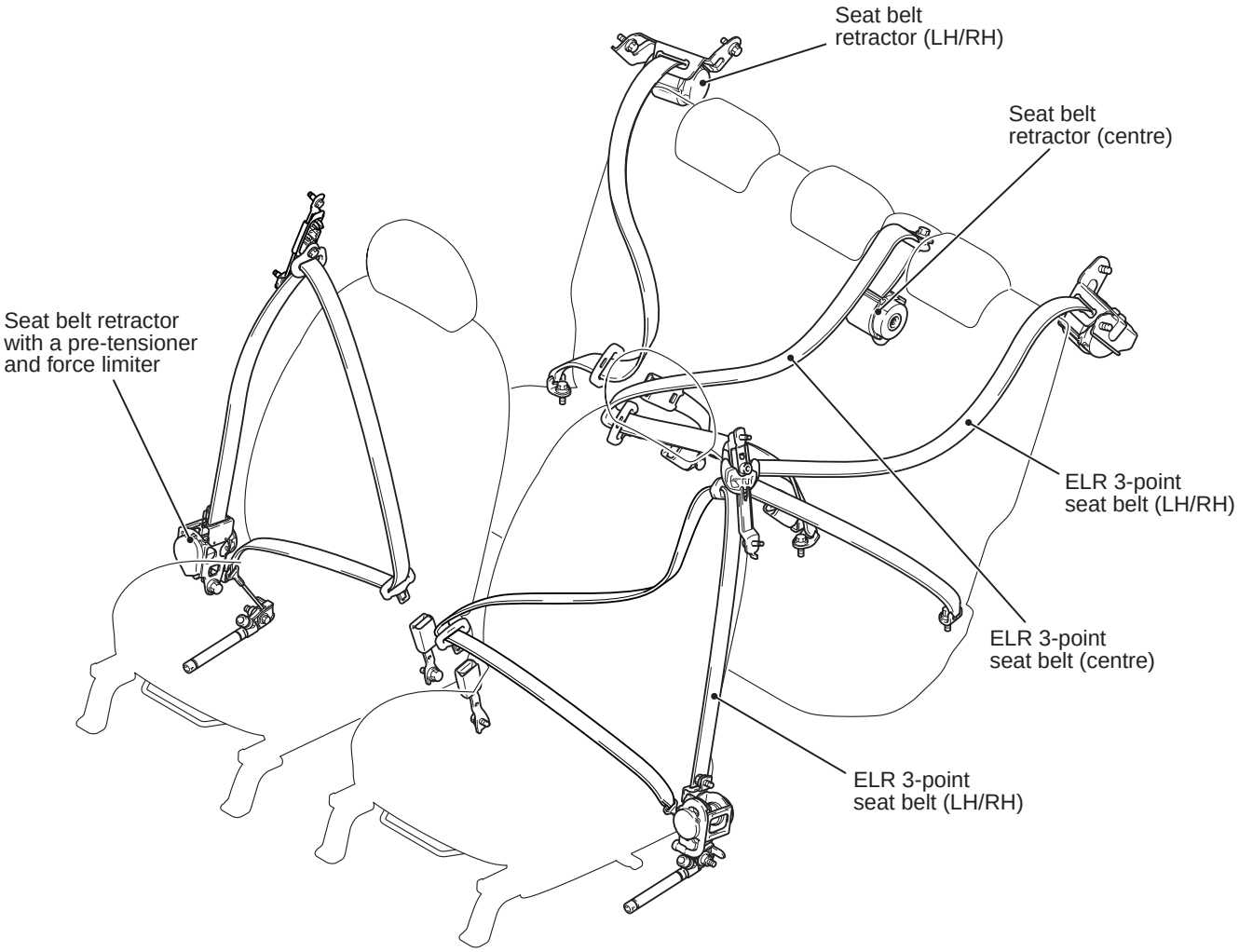

ACC04397AB

The seat belts offer the following features:

<Front seat belt>

- For improved protection, a three-point seat belt with ELR has been used together with a seat belt retractor with pre-tensioner and force-limiter function.

<Rear seat belt>

- A three-point seat with ELR has been adopted.

7.1.2. Condition of safety-belts/buckles.

M6160100200045

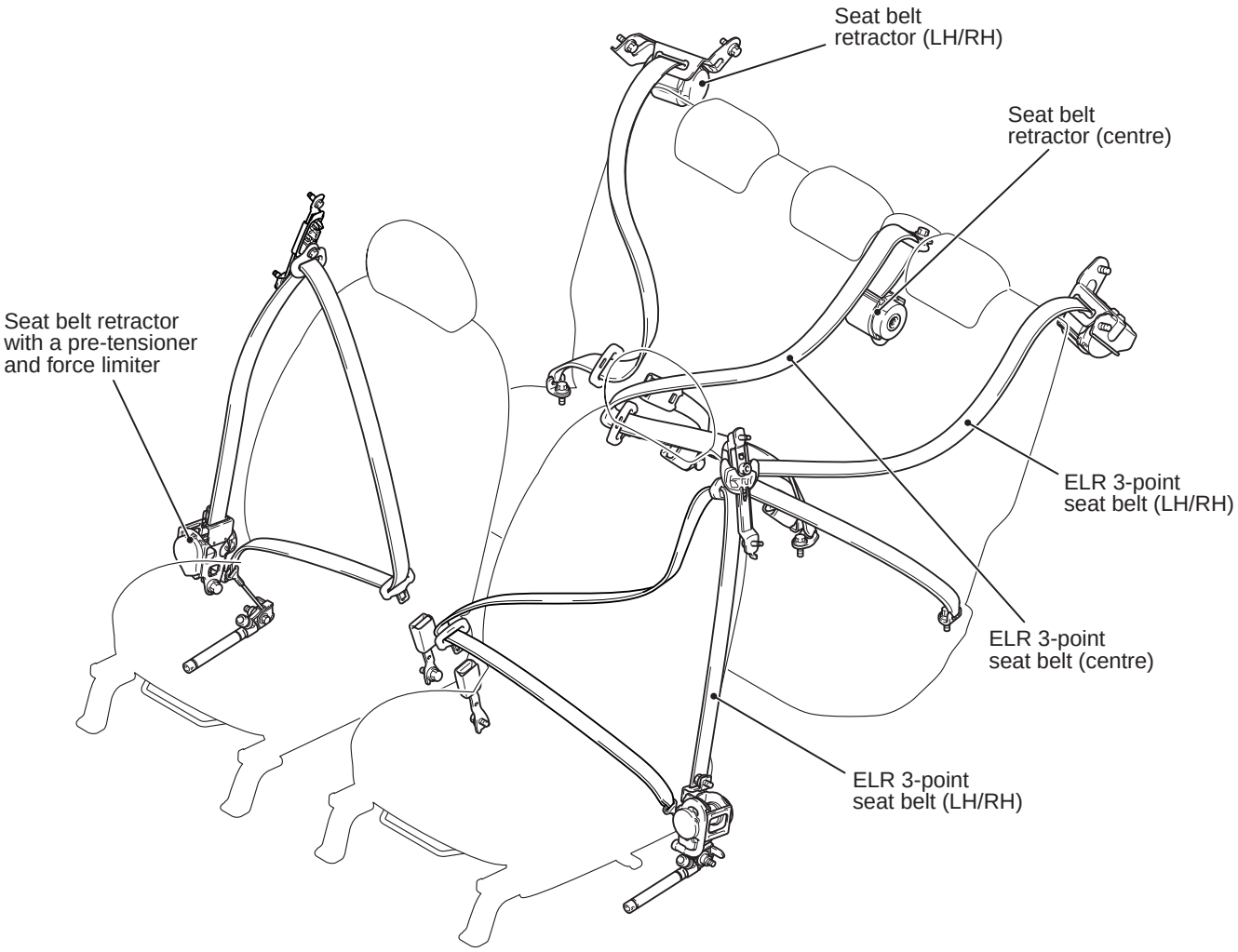

ACC04397AB

The seat belts offer the following features:

<Front seat belt>

- For improved protection, a three-point seat belt with ELR has been used together with a seat belt retractor with pre-tensioner and force-limiter function.

<Rear seat belt>

- A three-point seat with ELR has been adopted.

7.1.3. Safety belt load limiter

M6160100300042

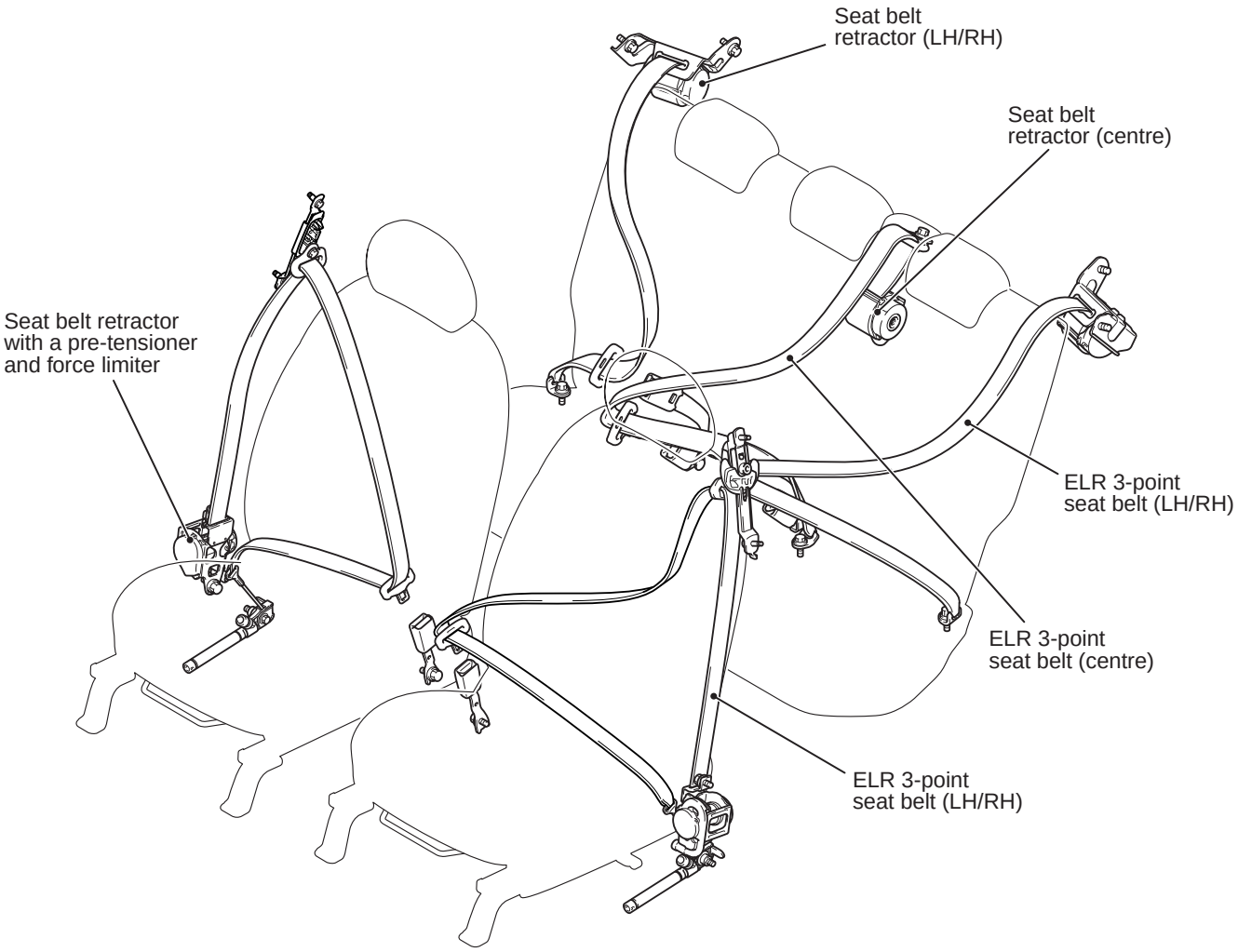

ACC04397AB

The seat belts offer the following features:

<Front seat belt>

- For improved protection, a three-point seat belt with ELR has been used together with a seat belt retractor with pre-tensioner and force-limiter function.

<Rear seat belt>

- A three-point seat with ELR has been adopted.

7.1.4. Safety belt Pre-tensioners

M6160100400049

- To provide a better safety upon impact, the driver's and front passenger's air bags, side-air-bags and curtain air bags and as well as the front seat belt with pre-tensioner have been installed to certain models as standard.
- The SRS* air bag is a system that is effective with the seat belt fastened, and it is designed as a supplemental system of the seat belt.
- The driver's and front passenger's SRS air bags are activated when an impact exceeding the threshold is applied upon a frontal collision, and the cushion air bag is instantaneously inflated to protect the head and chest areas of the front seat passengers.
- The side-airbag is activated when an impact exceeds the threshold upon a side collision, and the cushion air bag is instantaneously inflated to protect the chest area of the front seat passengers.
- The curtain air bag is activated simultaneously with the side-airbag upon a side collision to protect the heads of the front seat and second seat passengers.
- The passenger’s air bag cut off switch which can enable and disable the passenger’s (front) air bag has been equipped in the instrument panel of passenger’s side.
- For the inflator, the gas which is harmless to the human body has been adopted.
- The warning lamp on the instrument panel indicates the operational status of the SRS.
- The passenger’s air bag OFF indicator lamp is installed in headlining.
- The seat belt pre-tensioner is activated simultaneously with the deployment of driver's and passenger's (front) air bags in case of a frontal collision. Seat belts are pulled in to eliminate the slack upon a collision, thus improving the initial occupant restraint, and reducing the travel distance of the occupants. For the driver's seat and the passenger’s seat, in addition to the seat belt pre-tensioner for the shoulder side, the lap pre-tensioner has been installed on the outer seat belt lower anchor side in order to improve the restraining performance around the waist in addition to the chest area.

⚠ CAUTION

Do not disassemble the SRS air bag components or seat belt with pre-tensioner. Also, do not apply an impact.

*NOTE: *: SRS (Supplemental Restraint System)*

CONSTRUCTION DIAGRAM

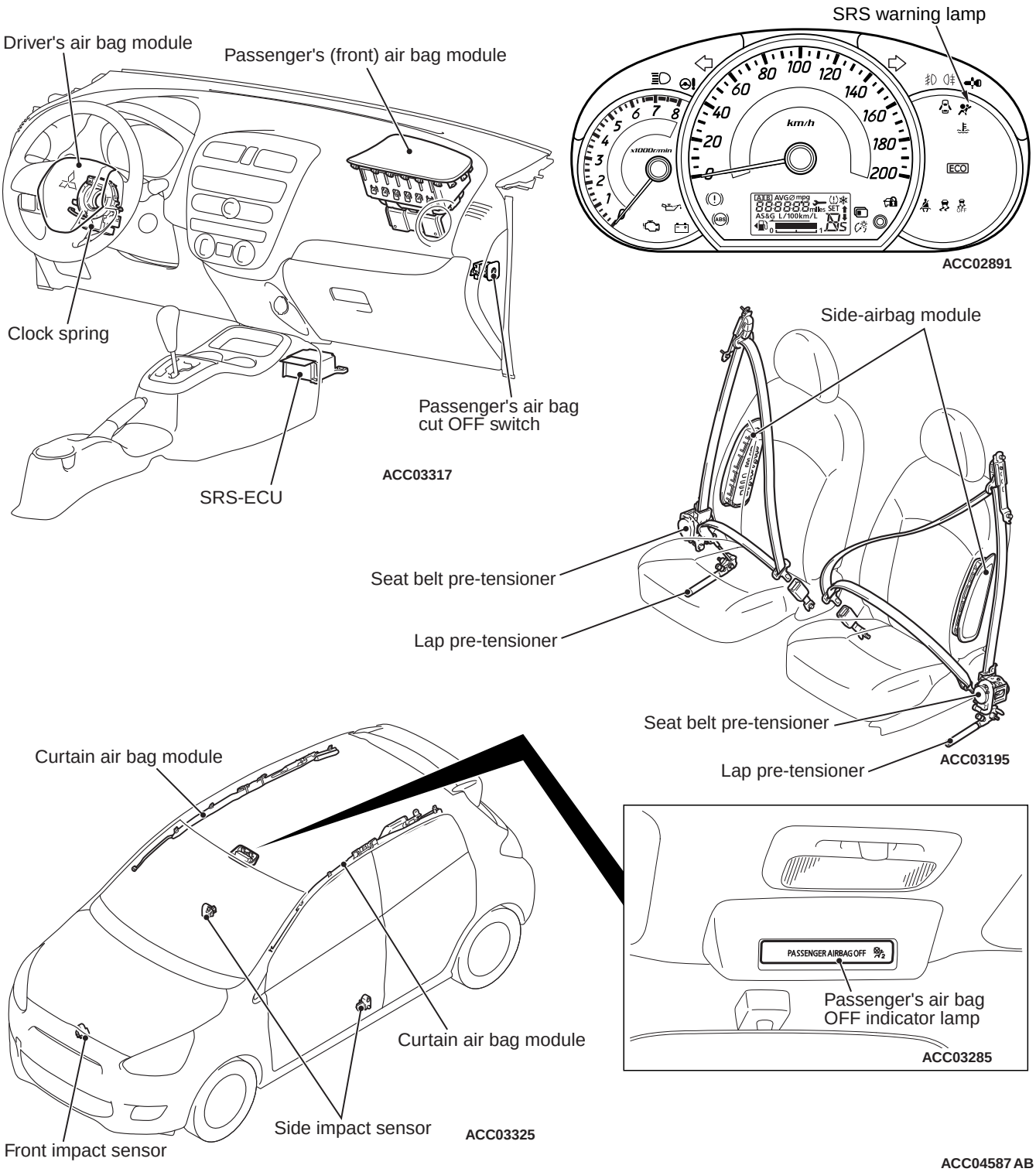
Driver's air bag module
Passenger's (front) air bag module
Clock spring
Passenger's air bag cut OFF switch
SRS-ECU
ACC03317
SRS warning lamp
km/h
ECO
ACC02891
Side-airbag module
Seat belt pre-tensioner
Lap pre-tensioner
Seat belt pre-tensioner
Lap pre-tensioner
ACC03195
Curtain air bag module
Curtain air bag module
Side impact sensor
Front impact sensor
ACC03325
PASSENGER AIRBAG OFF
Passenger's air bag OFF indicator lamp
ACC03285
ACC04587 AB

CAUTION LABELS

The labels indicating the precautions for handling and maintenance of SRS air bags and seat belt with pre-tensioner are attached to the locations shown in the figure. If the label is damaged or is dirty, replace with the new label.

Driver's air bag module

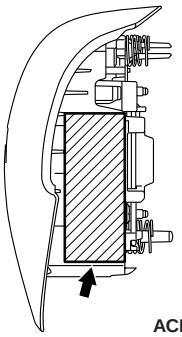

ACB03681

Passenger's (front) air bag module

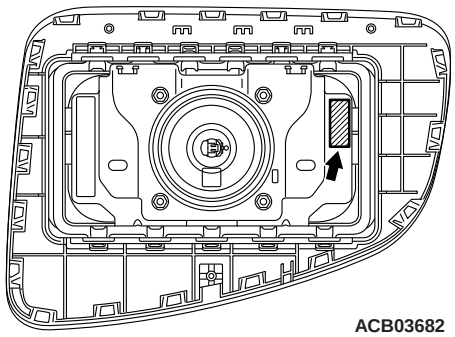

ACB03682

SRS-ECU

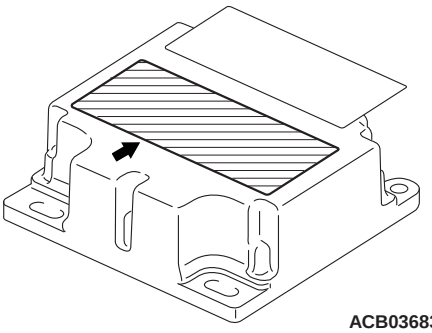

ACB03683

Side-airbag module (right and left)



AC801674
ACC00074

Curtain air bag module (right and left)

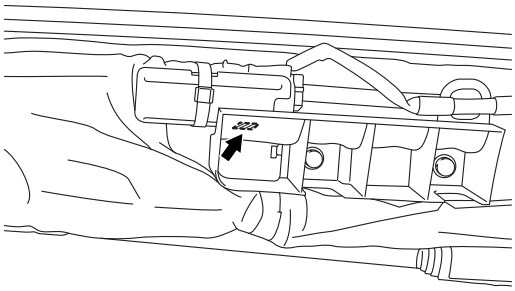

ACC01876

Sunvisor *

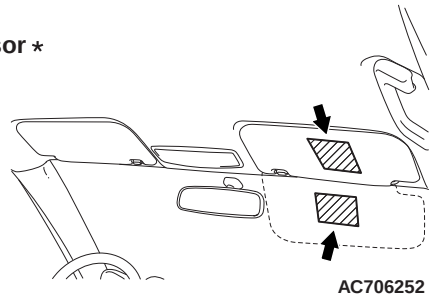

AC706252

Seat belt pre-tensioner (right and left)

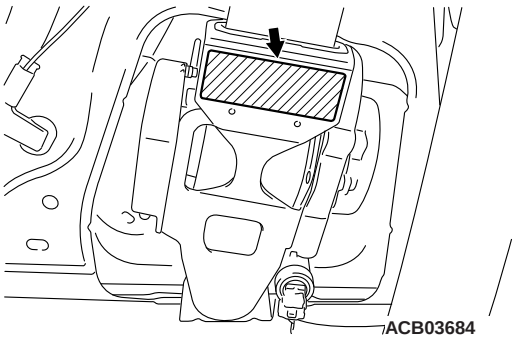

ACB03684

Lap pre-tensioner (right and left)

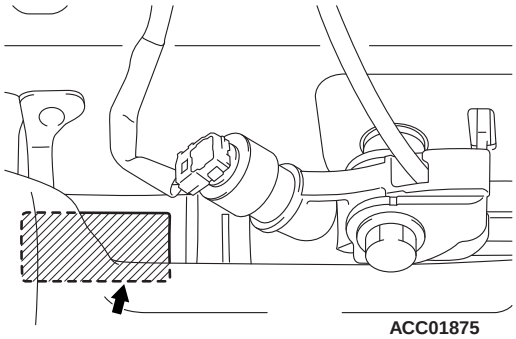

ACC01875

ACC03291AB

*NOTE: *: Indicates LHD vehicles. For RHD vehicles, the specified application position of label is reversed left to right*

SRS SYSTEM CIRCUIT DIAGRAM

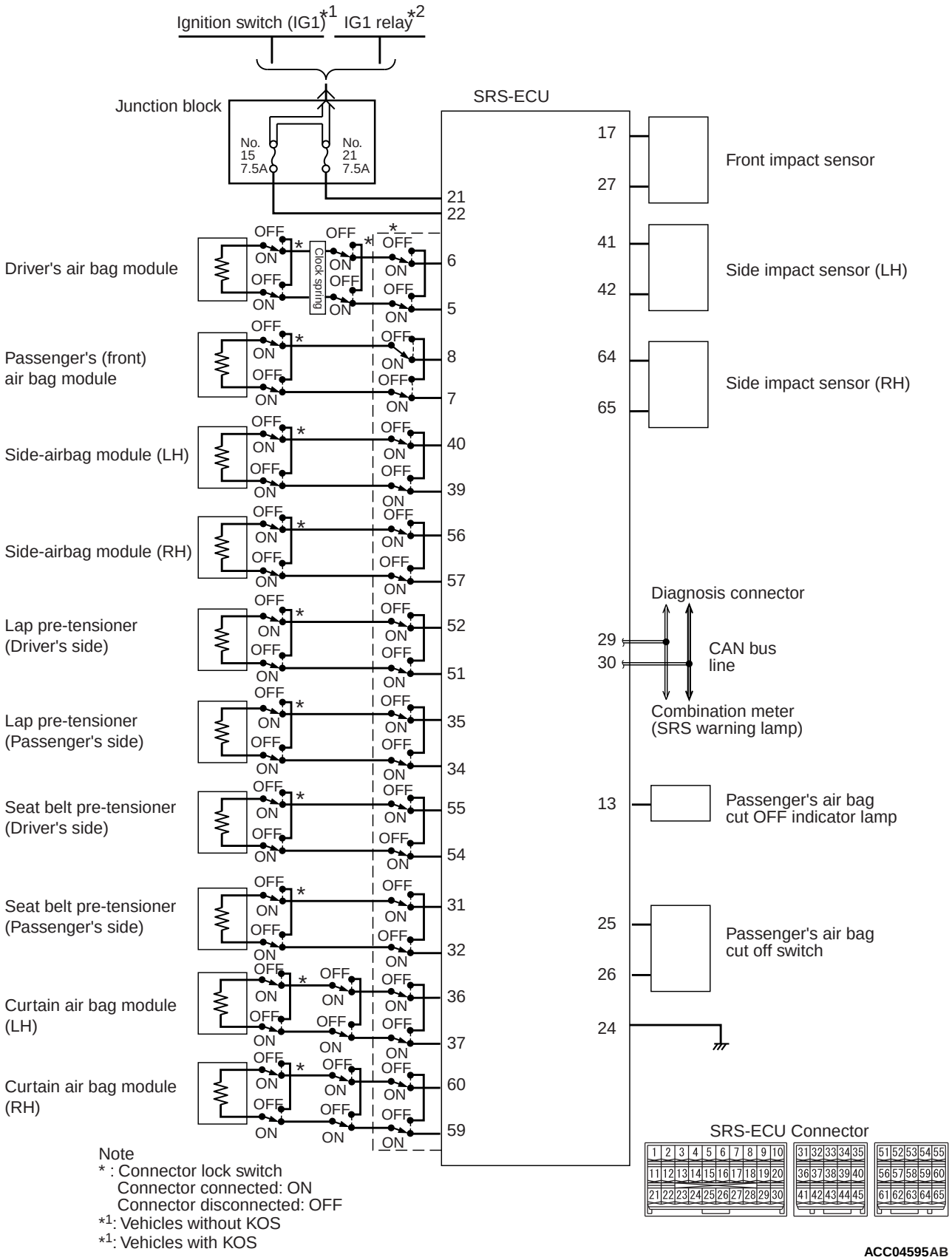

Note
* : Connector lock switch
Connector connected: ON
Connector disconnected: OFF
*1: Vehicles without KOS
*1: Vehicles with KOS

ACC04595AB

Number in system circuit diagram	Circuit name	Universal harness Wire size and colour
5	Driver's air bag squib (-)	W
6	Driver's air bag squib (+)	Y
7	Passenger's (front) air bag squib (+)	R
8	Passenger's (front) air bag squib (-)	P
13	Passenger’s air bag cut OFF indicator lamp	R
17	Front impact sensor (+)	LG
21	Ignition switch (IG1) power supply (fuse No. 21)	W
22	Ignition switch (IG1) power supply (fuse No. 15)	P
24	Earth	B
25	Passenger's air bag cut off switch (-)	Y
26	Passenger's air bag cut off switch (+)	G
27	Front impact sensor (-)	V
29	CAN-C_L	B
30	CAN-C_H	R
31	Passenger's seat belt pre-tensioner squib (+)	Y
32	Passenger's seat belt pre-tensioner squib (-)	R
34	Passenger's seat belt lap pre-tensioner squib (-)	G
35	Passenger's seat belt lap pre-tensioner squib (+)	R
36	Left-side curtain air bag squib (+)	G
37	Left-side curtain air bag squib (-)	W
39	Left-side side-airbag squib (-)	L
40	Left-side side-airbag squib (+)	R
41	Left-side side impact sensor (+)	LG
42	Left-side side impact sensor (-)	V
51	Driver's seat belt lap pre-tensioner squib (+)	V
52	Driver's seat belt lap pre-tensioner squib (-)	P
54	Driver's seat belt pre-tensioner squib (-)	GR
55	Driver's seat belt pre-tensioner squib (+)	W
56	Right-side side-airbag squib (+)	SB
57	Right-side side-airbag squib (-)	BR
59	Right-side curtain air bag squib (-)	Y
60	Right-side curtain air bag squib (+)	GR
64	Right-side side impact sensor (-)	L
65	Right-side side impact sensor (+)	P

NOTE: For how to read the harness wire diameter and wire colour, refer to the Electrical Wiring Diagram.

7.1.5. Airbag

M6160100500046

- To provide a better safety upon impact, the driver's and front passenger's air bags, side-air-bags and curtain air bags and as well as the front seat belt with pre-tensioner have been installed to certain models as standard.
- The SRS* air bag is a system that is effective with the seat belt fastened, and it is designed as a supplemental system of the seat belt.
- The driver's and front passenger's SRS air bags are activated when an impact exceeding the threshold is applied upon a frontal collision, and the cushion air bag is instantaneously inflated to protect the head and chest areas of the front seat passengers.
- The side-airbag is activated when an impact exceeds the threshold upon a side collision, and the cushion air bag is instantaneously inflated to protect the chest area of the front seat passengers.
- The curtain air bag is activated simultaneously with the side-airbag upon a side collision to protect the heads of the front seat and second seat passengers.
- The passenger’s air bag cut off switch which can enable and disable the passenger’s (front) air bag has been equipped in the instrument panel of passenger’s side.
- For the inflator, the gas which is harmless to the human body has been adopted.
- The warning lamp on the instrument panel indicates the operational status of the SRS.
- The passenger’s air bag OFF indicator lamp is installed in headlining.
- The seat belt pre-tensioner is activated simultaneously with the deployment of driver's and passenger's (front) air bags in case of a frontal collision. Seat belts are pulled in to eliminate the slack upon a collision, thus improving the initial occupant restraint, and reducing the travel distance of the occupants. For the driver's seat and the passenger’s seat, in addition to the seat belt pre-tensioner for the shoulder side, the lap pre-tensioner has been installed on the outer seat belt lower anchor side in order to improve the restraining performance around the waist in addition to the chest area.

⚠ CAUTION

Do not disassemble the SRS air bag components or seat belt with pre-tensioner. Also, do not apply an impact.

*NOTE: *: SRS (Supplemental Restraint System)*

CONSTRUCTION DIAGRAM

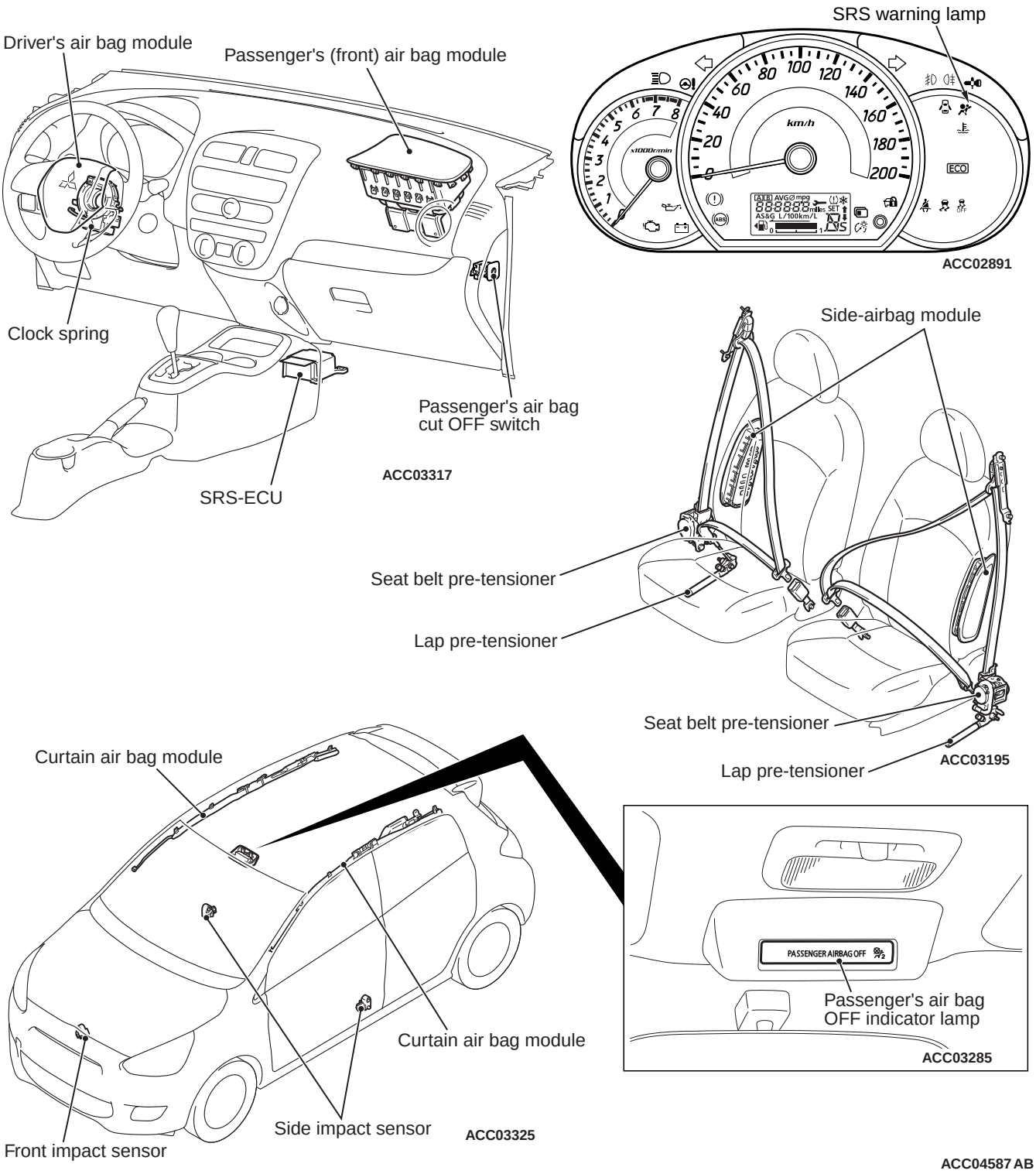
Driver's air bag module
Passenger's (front) air bag module
Clock spring
Passenger's air bag cut OFF switch
SRS-ECU
ACC03317
SRS warning lamp
km/h
ECO
ACC02891
Side-airbag module
Seat belt pre-tensioner
Lap pre-tensioner
Seat belt pre-tensioner
Lap pre-tensioner
ACC03195
Curtain air bag module
Curtain air bag module
Side impact sensor
Front impact sensor
ACC03325
PASSENGER AIRBAG OFF
Passenger's air bag OFF indicator lamp
ACC03285
ACC04587 AB

CAUTION LABELS

The labels indicating the precautions for handling and maintenance of SRS air bags and seat belt with pre-tensioner are attached to the locations shown in the figure. If the label is damaged or is dirty, replace with the new label.

Driver's air bag module

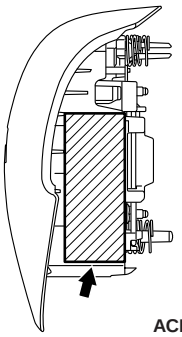

ACB03681

Passenger's (front) air bag module

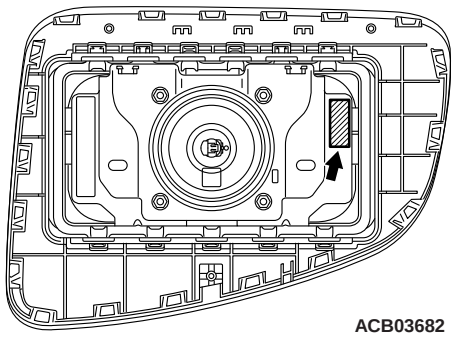

ACB03682

SRS-ECU

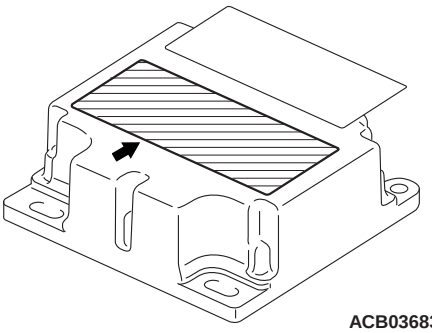

ACB03683

Side-airbag module (right and left)



AC801674
ACC00074

Curtain air bag module (right and left)

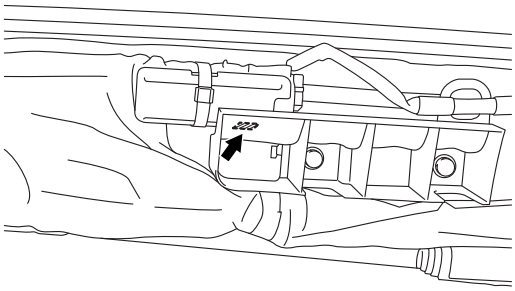

ACC01876

Sunvisor *

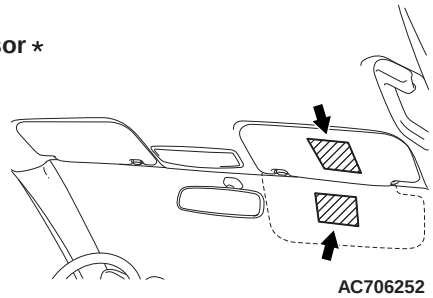

AC706252

Seat belt pre-tensioner (right and left)

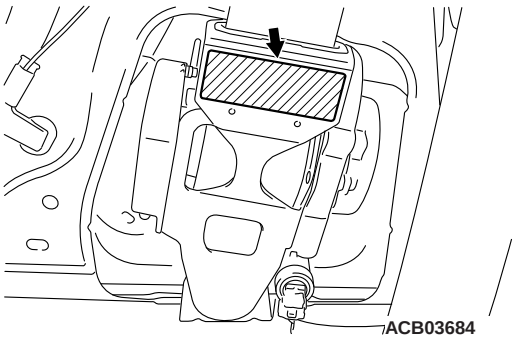

ACB03684

Lap pre-tensioner (right and left)

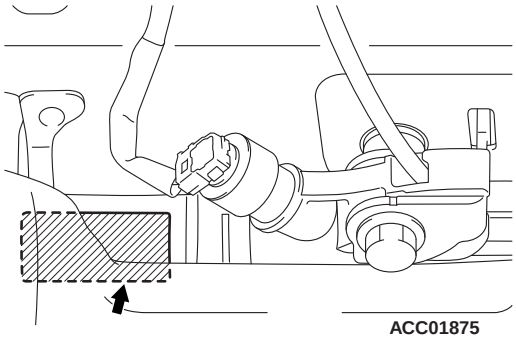

ACC01875

ACC03291AB

*NOTE: *: Indicates LHD vehicles. For RHD vehicles, the specified application position of label is reversed left to right*

SRS SYSTEM CIRCUIT DIAGRAM

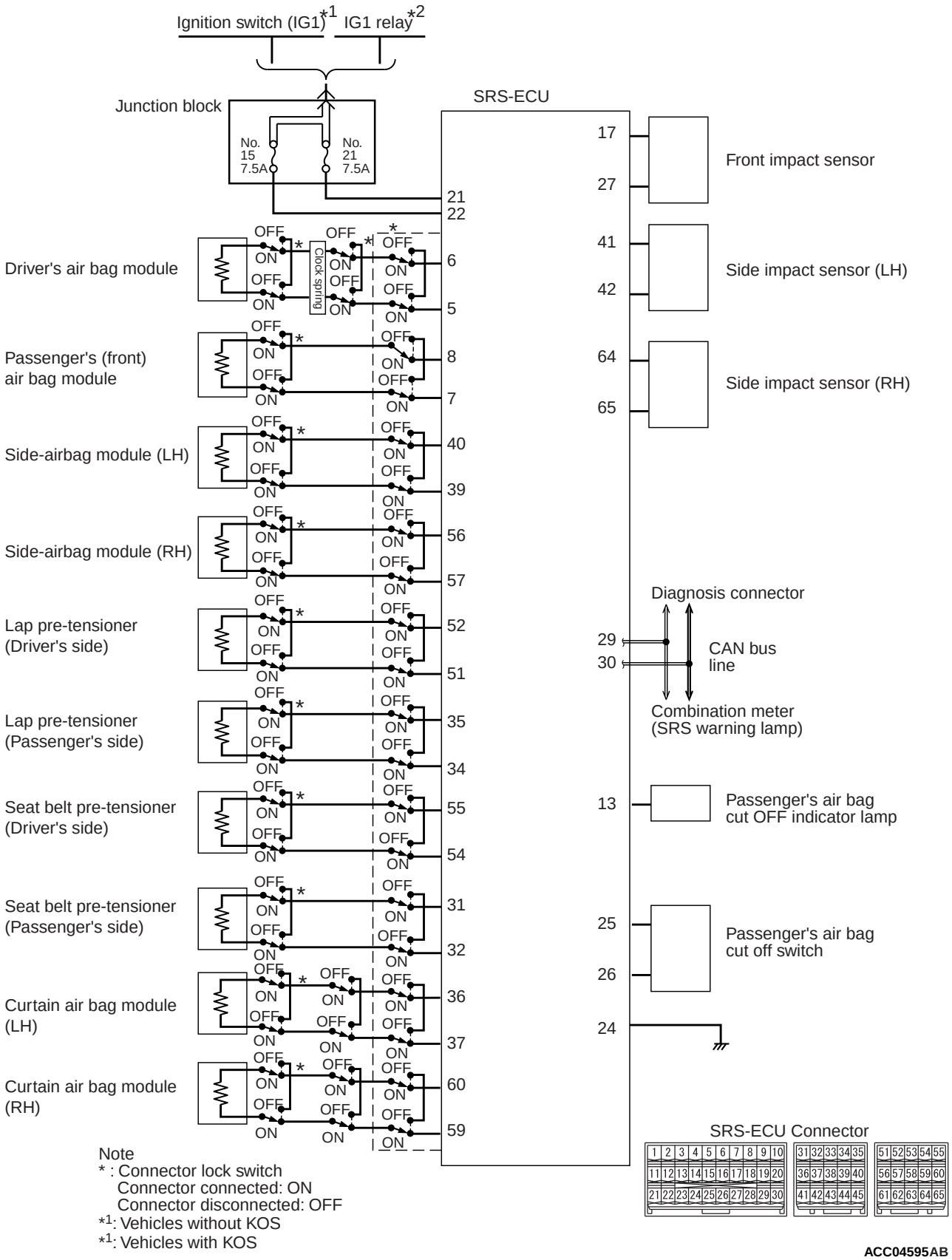

Note
* : Connector lock switch
Connector connected: ON
Connector disconnected: OFF
*1: Vehicles without KOS
*1: Vehicles with KOS

ACC04595AB

Number in system circuit diagram	Circuit name	Universal harness Wire size and colour
5	Driver's air bag squib (-)	W
6	Driver's air bag squib (+)	Y
7	Passenger's (front) air bag squib (+)	R
8	Passenger's (front) air bag squib (-)	P
13	Passenger’s air bag cut OFF indicator lamp	R
17	Front impact sensor (+)	LG
21	Ignition switch (IG1) power supply (fuse No. 21)	W
22	Ignition switch (IG1) power supply (fuse No. 15)	P
24	Earth	B
25	Passenger's air bag cut off switch (-)	Y
26	Passenger's air bag cut off switch (+)	G
27	Front impact sensor (-)	V
29	CAN-C_L	B
30	CAN-C_H	R
31	Passenger's seat belt pre-tensioner squib (+)	Y
32	Passenger's seat belt pre-tensioner squib (-)	R
34	Passenger's seat belt lap pre-tensioner squib (-)	G
35	Passenger's seat belt lap pre-tensioner squib (+)	R
36	Left-side curtain air bag squib (+)	G
37	Left-side curtain air bag squib (-)	W
39	Left-side side-airbag squib (-)	L
40	Left-side side-airbag squib (+)	R
41	Left-side side impact sensor (+)	LG
42	Left-side side impact sensor (-)	V
51	Driver's seat belt lap pre-tensioner squib (+)	V
52	Driver's seat belt lap pre-tensioner squib (-)	P
54	Driver's seat belt pre-tensioner squib (-)	GR
55	Driver's seat belt pre-tensioner squib (+)	W
56	Right-side side-airbag squib (+)	SB
57	Right-side side-airbag squib (-)	BR
59	Right-side curtain air bag squib (-)	Y
60	Right-side curtain air bag squib (+)	GR
64	Right-side side impact sensor (-)	L
65	Right-side side impact sensor (+)	P

NOTE: For how to read the harness wire diameter and wire colour, refer to the Electrical Wiring Diagram.

7.1.6. SRS Systems

M6160100600043

- To provide a better safety upon impact, the driver's and front passenger's air bags, side-air-bags and curtain air bags and as well as the front seat belt with pre-tensioner have been installed to certain models as standard.
- The SRS* air bag is a system that is effective with the seat belt fastened, and it is designed as a supplemental system of the seat belt.
- The driver's and front passenger's SRS air bags are activated when an impact exceeding the threshold is applied upon a frontal collision, and the cushion air bag is instantaneously inflated to protect the head and chest areas of the front seat passengers.
- The side-airbag is activated when an impact exceeds the threshold upon a side collision, and the cushion air bag is instantaneously inflated to protect the chest area of the front seat passengers.
- The curtain air bag is activated simultaneously with the side-airbag upon a side collision to protect the heads of the front seat and second seat passengers.
- The passenger’s air bag cut off switch which can enable and disable the passenger’s (front) air bag has been equipped in the instrument panel of passenger’s side.
- For the inflator, the gas which is harmless to the human body has been adopted.
- The warning lamp on the instrument panel indicates the operational status of the SRS.
- The passenger’s air bag OFF indicator lamp is installed in headlining.
- The seat belt pre-tensioner is activated simultaneously with the deployment of driver's and passenger's (front) air bags in case of a frontal collision. Seat belts are pulled in to eliminate the slack upon a collision, thus improving the initial occupant restraint, and reducing the travel distance of the occupants. For the driver's seat and the passenger’s seat, in addition to the seat belt pre-tensioner for the shoulder side, the lap pre-tensioner has been installed on the outer seat belt lower anchor side in order to improve the restraining performance around the waist in addition to the chest area.

⚠ CAUTION

Do not disassemble the SRS air bag components or seat belt with pre-tensioner. Also, do not apply an impact.

*NOTE: *: SRS (Supplemental Restraint System)*

CONSTRUCTION DIAGRAM

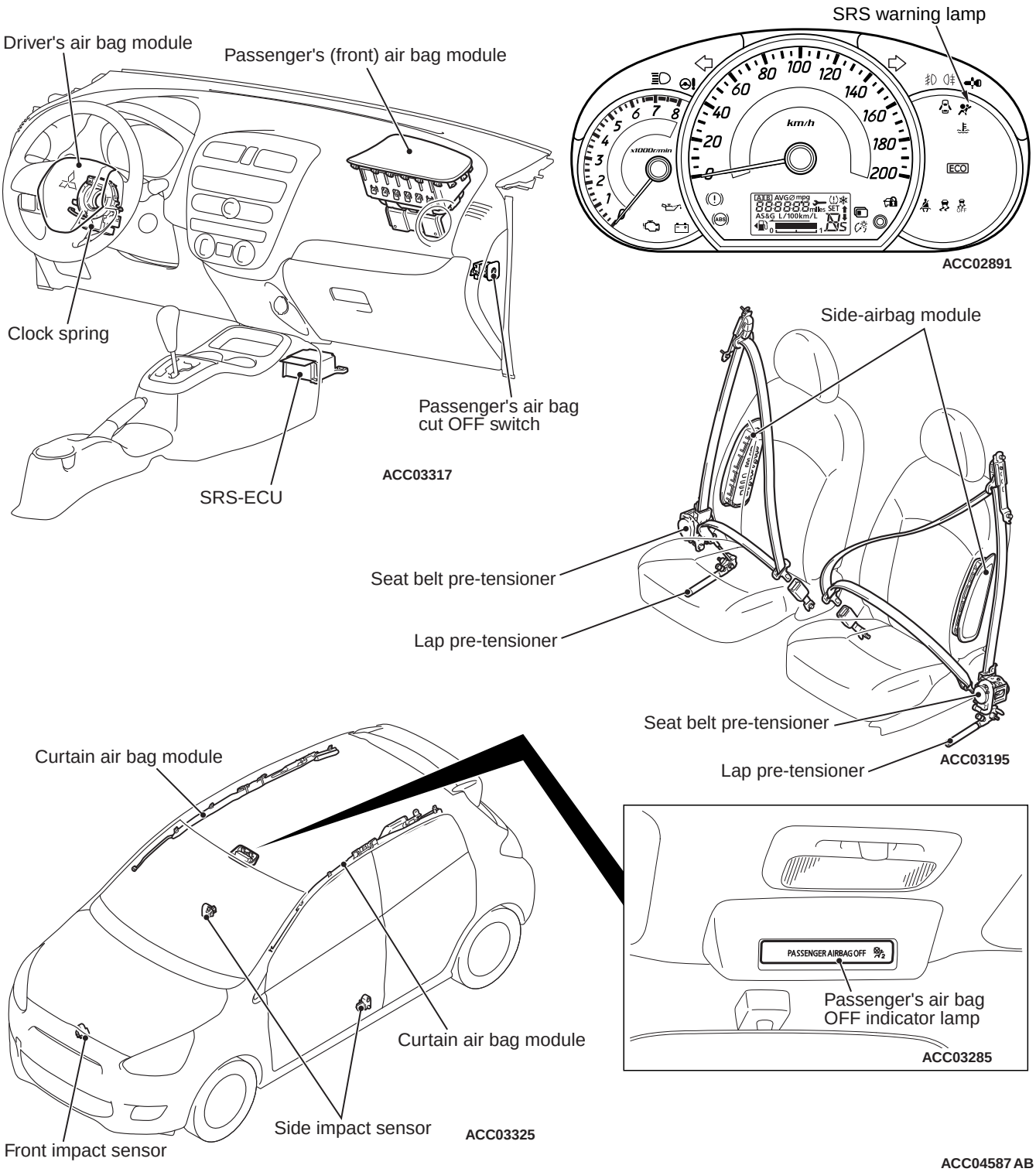
Driver's air bag module
Passenger's (front) air bag module
Clock spring
Passenger's air bag cut OFF switch
SRS-ECU
ACC03317
SRS warning lamp
km/h
ECO
ACC02891
Side-airbag module
Seat belt pre-tensioner
Lap pre-tensioner
Seat belt pre-tensioner
Lap pre-tensioner
ACC03195
Curtain air bag module
Curtain air bag module
Side impact sensor
Front impact sensor
ACC03325
PASSENGER AIRBAG OFF
Passenger's air bag OFF indicator lamp
ACC03285
ACC04587 AB

CAUTION LABELS

The labels indicating the precautions for handling and maintenance of SRS air bags and seat belt with pre-tensioner are attached to the locations shown in the figure. If the label is damaged or is dirty, replace with the new label.

Driver's air bag module

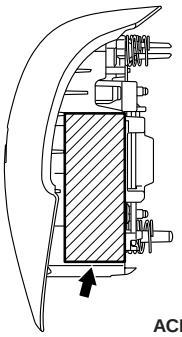

ACB03681

Passenger's (front) air bag module

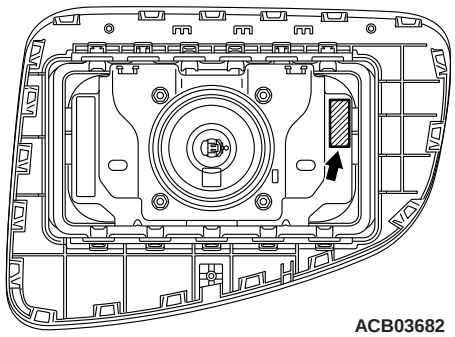

ACB03682

SRS-ECU

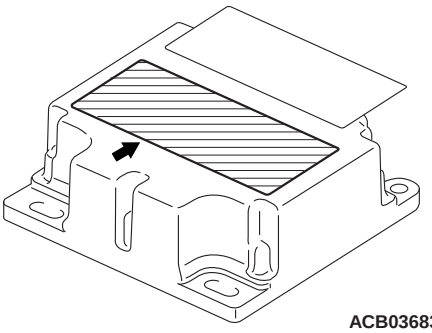

ACB03683

Side-airbag module (right and left)



AC801674
ACC00074

Curtain air bag module (right and left)

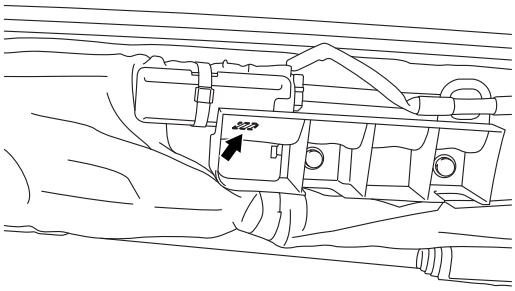

ACC01876

Sunvisor *

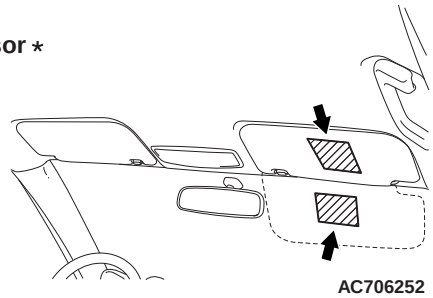

AC706252

Seat belt pre-tensioner (right and left)

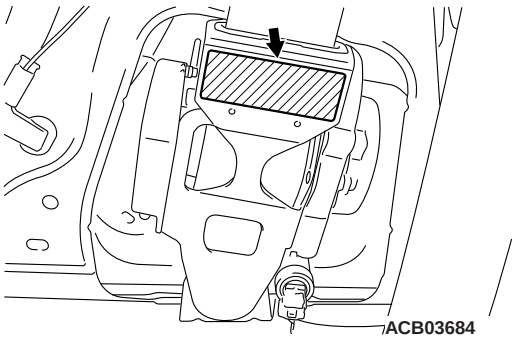

ACB03684

Lap pre-tensioner (right and left)

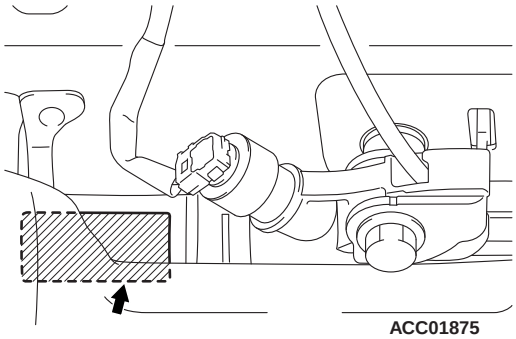

ACC01875

ACC03291AB

*NOTE: *: Indicates LHD vehicles. For RHD vehicles, the specified application position of label is reversed left to right*

SRS SYSTEM CIRCUIT DIAGRAM

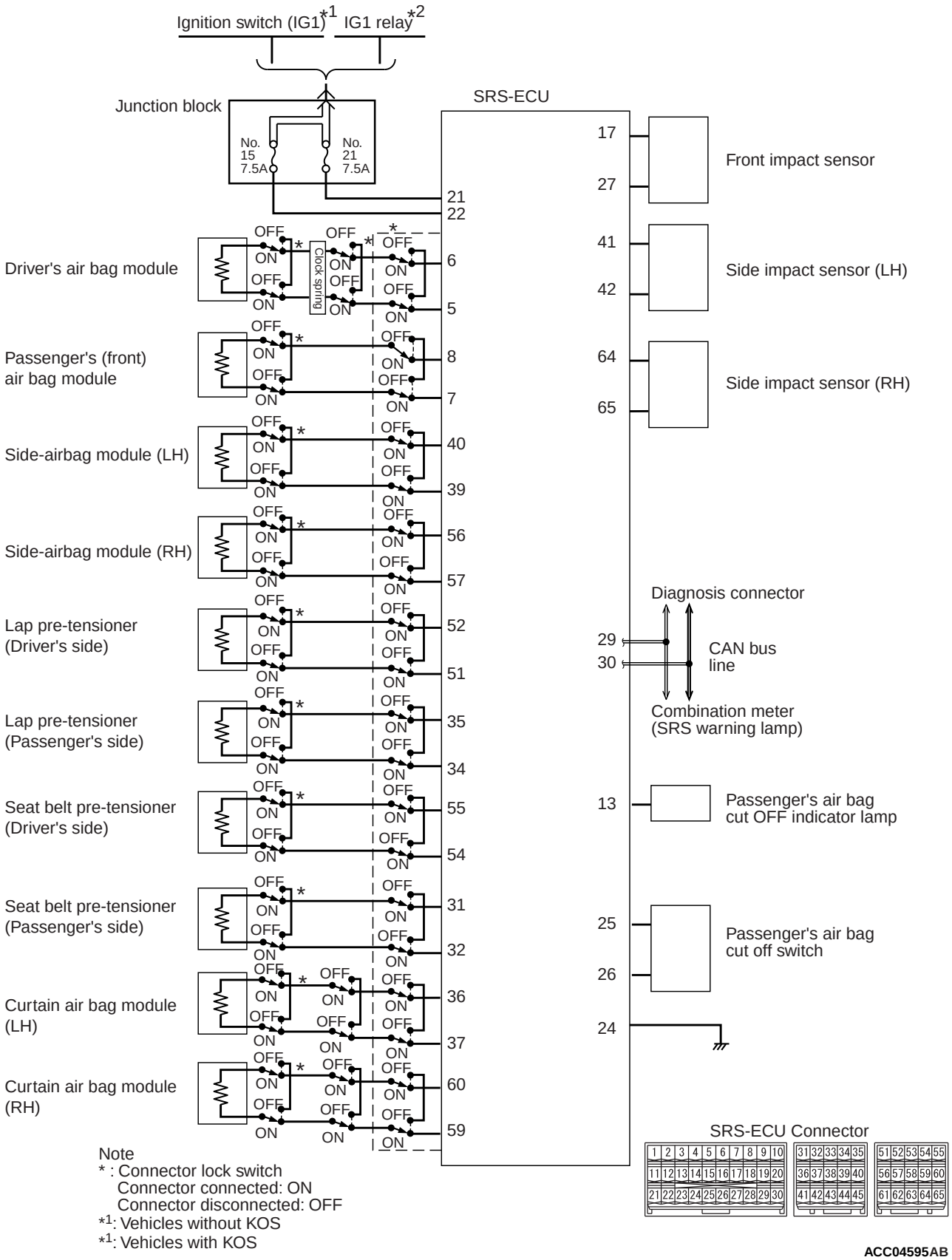

Note
* : Connector lock switch
Connector connected: ON
Connector disconnected: OFF
*1: Vehicles without KOS
*1: Vehicles with KOS

ACC04595AB

Number in system circuit diagram	Circuit name	Universal harness Wire size and colour
5	Driver's air bag squib (-)	W
6	Driver's air bag squib (+)	Y
7	Passenger's (front) air bag squib (+)	R
8	Passenger's (front) air bag squib (-)	P
13	Passenger’s air bag cut OFF indicator lamp	R
17	Front impact sensor (+)	LG
21	Ignition switch (IG1) power supply (fuse No. 21)	W
22	Ignition switch (IG1) power supply (fuse No. 15)	P
24	Earth	B
25	Passenger's air bag cut off switch (-)	Y
26	Passenger's air bag cut off switch (+)	G
27	Front impact sensor (-)	V
29	CAN-C_L	B
30	CAN-C_H	R
31	Passenger's seat belt pre-tensioner squib (+)	Y
32	Passenger's seat belt pre-tensioner squib (-)	R
34	Passenger's seat belt lap pre-tensioner squib (-)	G
35	Passenger's seat belt lap pre-tensioner squib (+)	R
36	Left-side curtain air bag squib (+)	G
37	Left-side curtain air bag squib (-)	W
39	Left-side side-airbag squib (-)	L
40	Left-side side-airbag squib (+)	R
41	Left-side side impact sensor (+)	LG
42	Left-side side impact sensor (-)	V
51	Driver's seat belt lap pre-tensioner squib (+)	V
52	Driver's seat belt lap pre-tensioner squib (-)	P
54	Driver's seat belt pre-tensioner squib (-)	GR
55	Driver's seat belt pre-tensioner squib (+)	W
56	Right-side side-airbag squib (+)	SB
57	Right-side side-airbag squib (-)	BR
59	Right-side curtain air bag squib (-)	Y
60	Right-side curtain air bag squib (+)	GR
64	Right-side side impact sensor (-)	L
65	Right-side side impact sensor (+)	P

NOTE: For how to read the harness wire diameter and wire colour, refer to the Electrical Wiring Diagram.

7.2. Fire extinguisher (X)2

M6169200000067

"Not Applicable"

7.3. Locks and anti-theft device

M6169300000042

"Not Applicable"

7.4. Warning triangle (if required) (X)2

M6169400000049

"Not Applicable"

7.5. First aid kit. (if required) (X)2

M6169500000046

"Not Applicable"

7.6. Wheel chocks (wedges) (if required) (X)2

M6169600000043

"Not Applicable"

7.7. Audible warning device

M6169700000040

"Not Applicable"

7.8. Speedometer

M6169800000047

"Not Applicable"

7.9. Tachograph (if fitted/required)

M6169900000044

"Not Applicable"

7.10. Speed limitation device (if fitted/required)

M6161100000044

"Not Applicable"

7.11 Odometer if available (X)2

M6160200000048

Visual Inspection

Check the odometer for displaying the total traveling distance of vehicle.

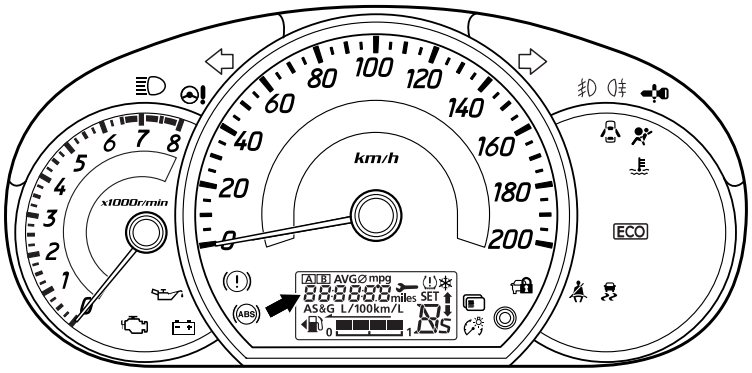

ACI01998 AB

7.12 Electronic Stability Control (ESC) if fitted/required

M6161200000041

ASC INDICATOR LAMP, ABS WARNING LAMP AND BRAKE WARNING LAMP CHECK

Check that ABS and brake warning lamps, ASC indicator lamp illuminate as follows.

NOTE: The brake warning lamp is used as a warning lamp for parking brake, brake fluid level, and EBD control.

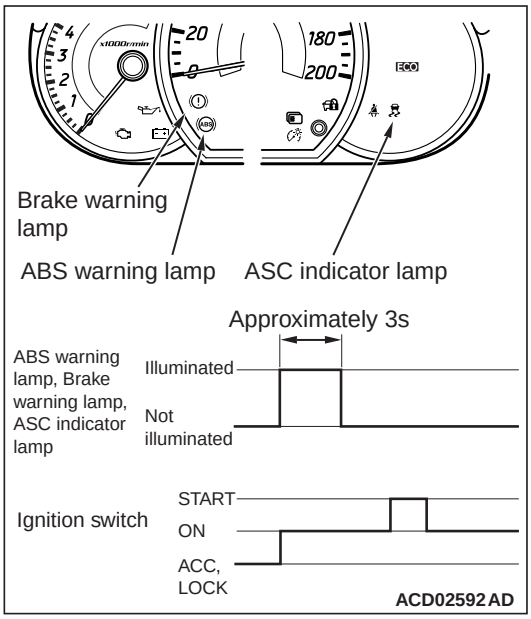

ACD02592 AD

1. When the ignition switch is turned to the "ON" position, ABS and brake warning lamps, ASC indicator lamp illuminate.
2. The ABS and brake warning lamps, ASC indicator lamp illuminate for 3 seconds[*1] and then turn off[*2].
3. Otherwise, check the diagnosis code.

NOTE:

- *[*1]: The ABS warning lamp, the brake warning lamp or the ASC indicator lamp may continue illuminating. When a diagnosis code, which is associated with the wheel speed sensor, the G and yaw rate sensor or the steering wheel sensor, is set in the ASC-ECU as a historic fault, the ECU will allow the warning/indicator lamp to illuminate until the relevant fault is cleared.*
- *[*2]: The brake warning lamp does not turn "OFF" when the parking brake is applied or the brake fluid level is lowered.*

GROUP 8

NUISANCE

CONTENTS

8.1. NOISE 8-2
8.1.1 Noise suppression system 8-2

8.2. EXHAUST EMISSIONS. 8-2
8.2.1 Positive ignition engine emissions . . . 8-2
8.2.1.1 Exhaust emissions control equipment 8-2
8.2.1.2 Gaseous emissions. 8-2
8.2.2 Compression ignition engine emissions 8-5
8.2.2.1 Exhaust emission control equipment 8-5
8.2.2.2 Opacity 8-5

8.3. ELECTROMAGNETIC INTERFERENCE SUPPRESSION. 8-7

8.4. OTHER ITEMS RELATED TO THE ENVIRONMENT 8-7
8.4.1. Fluid leaks 8-7

8.1. Noise

8.1.1 Noise suppression system

M6170100100049

“Query raised for this content”

8.2. Exhaust emissions

8.2.1 Positive ignition engine emissions

8.2.1.1 Exhaust emissions control equipment

M6170200200076

CONSTRUCTION DIAGRAM

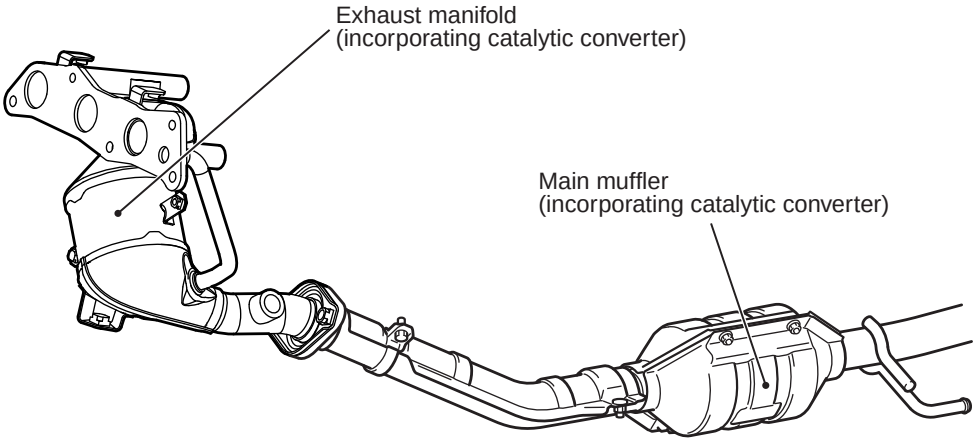

ACI01999 AB

8.2.1.2 Gaseous emissions

M6170200300040

PRE-INSPECTION CONDITION

"Pre-inspection condition" refers to the condition that the vehicle must be in before proper engine inspection can be carried out. If you see the words "Set the vehicle to the pre-inspection condition". In this manual, it means to set the vehicle to the following condition.

- Engine coolant temperature: 80 to 90°C
- Lamps, electric cooling fan and all accessories: OFF
- M/T: Neutral
- CVT: "P" range

IDLE MIXTURE CHECK

1. Before inspection, set the vehicle to the pre-inspection condition.
2. Turn the ignition switch to the "LOCK" (OFF) position and then connect the M.U.T.-III to the diagnosis connector.

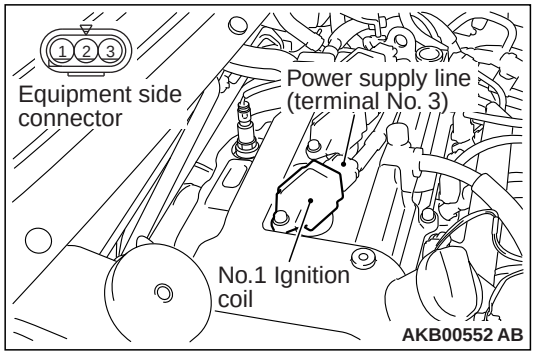

3. Set the timing light to the power supply line (terminal No. 3) of the ignition coil No. 1.

   NOTE: The power supply line is looped and also longer than the other ones.
4. Start the engine and let it run at idle.
5. Check that ignition timing is at the standard value.

   Standard value:
   - **3A90: Approximately 10° BTDC**
   - **3A92: Approximately 8° BTDC**
6. Using the M.U.T.-III, select data list item No. 2 "Crank angle sensor" in MPI system and run the engine at 2,000 – 3,000 r/min for 2 minutes. .
7. Set the CO, HC tester.
8. Check the CO contents and the HC contents at idle.

   Standard value
   CO contents: 0.3% or less
   HC contents: 200 ppm or less
9. If there is a deviation from the standard value, inspect the MPI system.
10. Remove the timing light and CO, HC tester.
11. Turn the ignition switch to "LOCK" (OFF) position and then disconnect the M.U.T.-III.

MULTI USE TESTER (M.U.T.-III)

MULTI USE TESTER (M.U.T.-III) sub assembly

Vehicle communication interface (V.C.I.)

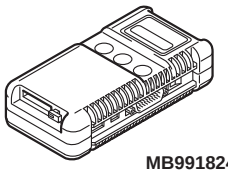

MB991824

M.U.T.-III USB cable

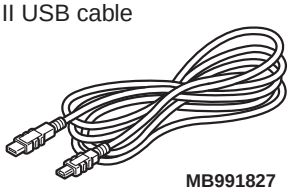

MB991827

M.U.T.-III main harness A

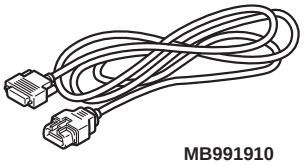

MB991910

M.U.T.-III main harness B

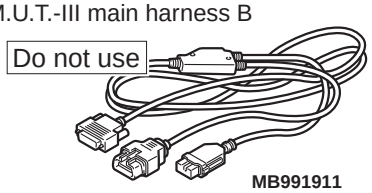

MB991911

M.U.T.-III adapter harness

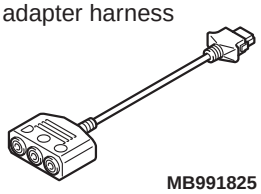

MB991825

M.U.T.-III trigger harness

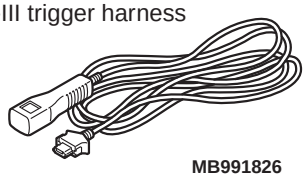

MB991826

AC305090AJ

MULTI USE TESTER (M.U.T.-III)

Vehicle communication interface-Lite (V.C.I.-Lite)



MB992744

V.C.I.-Lite main harness A

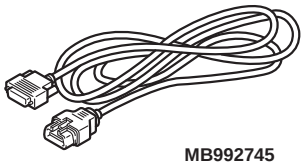

MB992745

V.C.I.-Lite main harness B

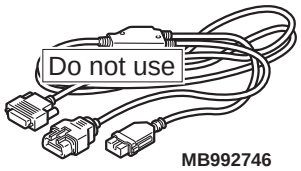

MB992746

V.C.I.-Lite USB cable short

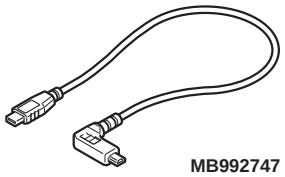

MB992747

V.C.I.-Lite USB cable long

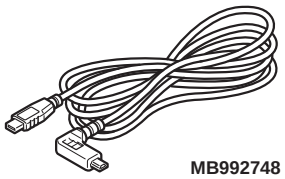

MB992748

ACB05419AB

- Both the special tool V.C.I. (MB991824) and the special tool V.C.I.-Lite (MB992744) can be used.

⚠ CAUTION

For the V.C.I., use MB991827 and MB991910. For the V.C.I.-Lite, use MB992745, MB992747 and MB992748.

- Refer to the "M.U.T.-III User's Manual" for instructions on handling the M.U.T.-III.

⚠ CAUTION

Turn the ignition switch to the "LOCK" (OFF) position <vehicles without KOS> or put the engine switch to operation mode in OFF <vehicles with KOS> before connecting or disconnecting the M.U.T.-III.

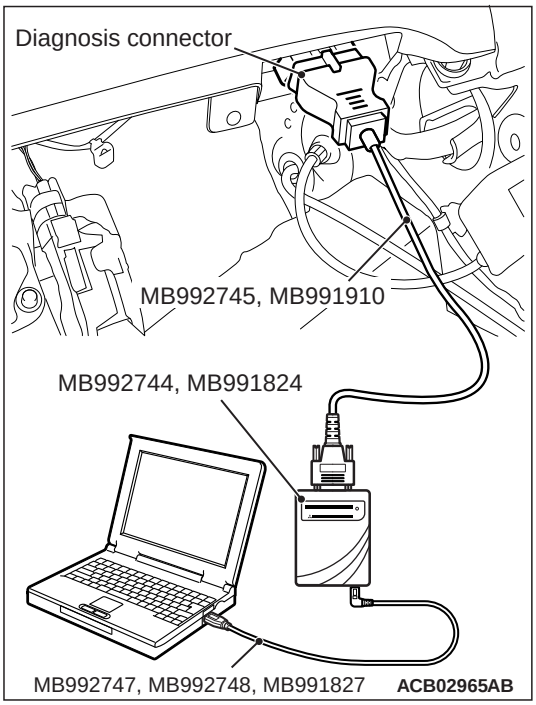

Connect the M.U.T.-III to the diagnosis connector as shown in the illustration.

8.2.2 Compression ignition engine emissions

8.2.2.1 Exhaust emission control equipment

M6170201100061

CONSTRUCTION DIAGRAM

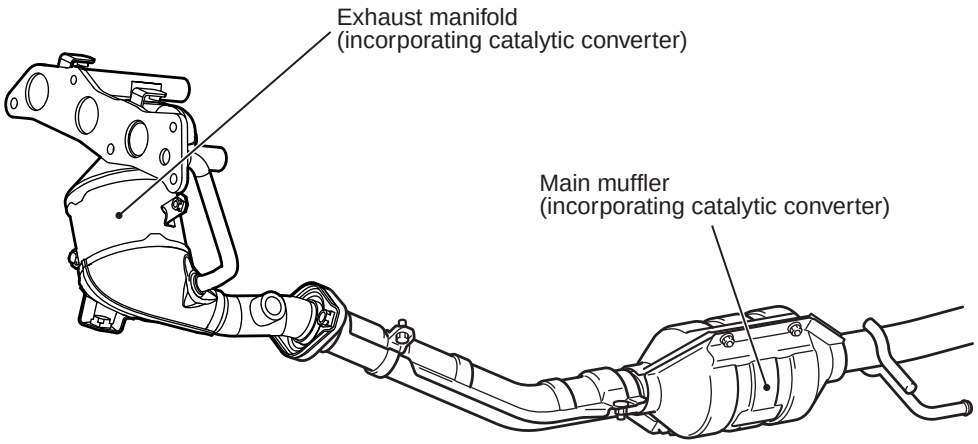

ACI01999 AB

COMPONENT LOCATION (EXHAUST GAS RECIRCULATION SYSTEM)

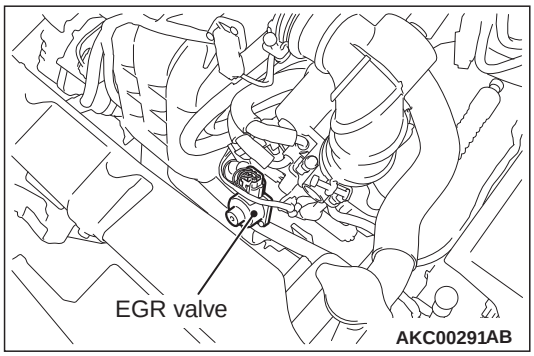

8.2.2.2 Opacity

M6170201200046

PRE-INSPECTION CONDITION

"Pre-inspection condition" refers to the condition that the vehicle must be in before proper engine inspection can be carried out. If you see the words "Set the vehicle to the pre-inspection condition". In this manual, it means to set the vehicle to the following condition.

- Engine coolant temperature: 80 to 90°C
- Lamps, electric cooling fan and all accessories: OFF
- M/T: Neutral
- CVT: "P" range

MULTI USE TESTER (M.U.T.-III)

MULTI USE TESTER (M.U.T.-III) sub assembly

Vehicle communication interface (V.C.I.)

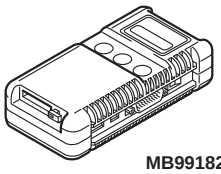

MB991824

M.U.T.-III USB cable

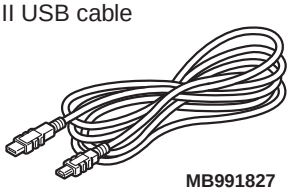

MB991827

M.U.T.-III main harness A

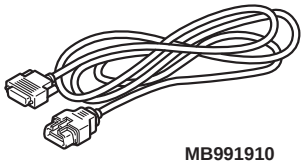

MB991910

M.U.T.-III main harness B

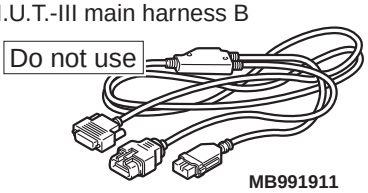

MB991911

M.U.T.-III adapter harness

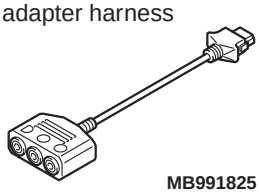

MB991825

M.U.T.-III trigger harness

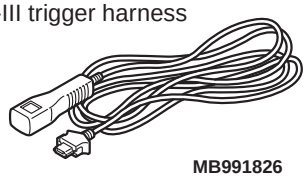

MB991826

AC305090AJ

MULTI USE TESTER (M.U.T.-III)

Vehicle communication interface-Lite (V.C.I.-Lite)



MB992744

V.C.I.-Lite main harness A

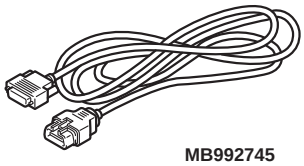

MB992745

V.C.I.-Lite main harness B

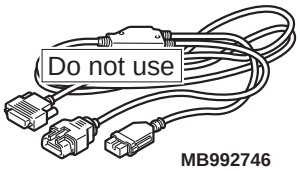

MB992746

V.C.I.-Lite USB cable short

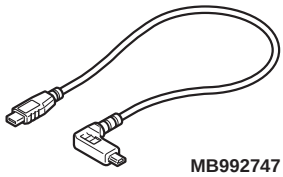

MB992747

V.C.I.-Lite USB cable long

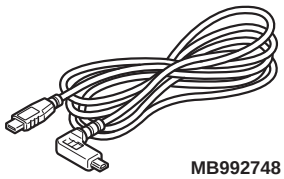

MB992748

ACB05419AB

- Both the special tool V.C.I. (MB991824) and the special tool V.C.I.-Lite (MB992744) can be used.

⚠ CAUTION

For the V.C.I., use MB991827 and MB991910. For the V.C.I.-Lite, use MB992745, MB992747 and MB992748.

- Refer to the "M.U.T.-III User's Manual" for instructions on handling the M.U.T.-III.

⚠ CAUTION
Turn the ignition switch to the "LOCK" (OFF) position <vehicles without KOS> or put the engine switch to operation mode in OFF <vehicles with KOS> before connecting or disconnecting the M.U.T.-III.

Connect the M.U.T.-III to the diagnosis connector as shown in the illustration.

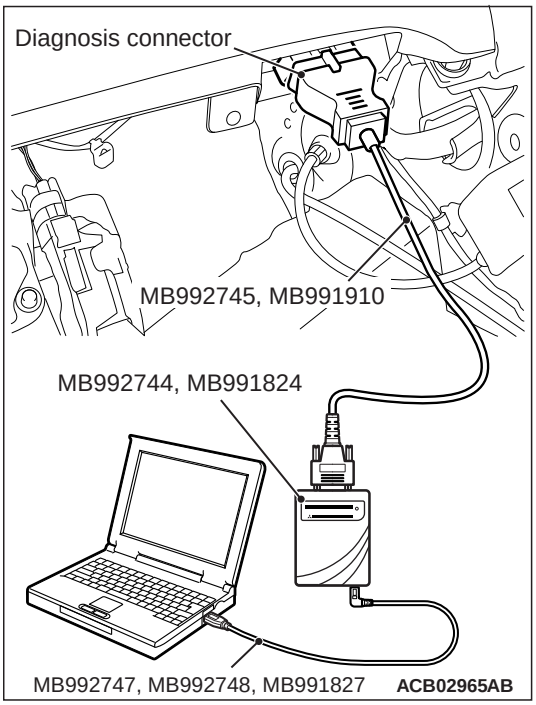

8.3. Electromagnetic interference suppression

M6170300000057

"Not Applicable"

8.4. Other items related to the environment

8.4.1. Fluid leaks

M6170400100040

"Not Applicable"

GROUP 9

SUPPLEMENTARY TESTS FOR PASSENGER-CARRYING VEHICLES CATEGORIES M2, M3

CONTENTS

9.1. DOORS 9-3
9.1.1. Entrance and exit doors 9-3
9.1.2. Emergency exits 9-3

9.2. DEMISTING AND DEFROSTING SYSTEM (X)2 9-3

9.3. VENTILATION & HEATING SYSTEM (X)2 9-3

9.4. SEATS. 9-3
9.4.1. Passenger seats (including seats for accompanying personnel) 9-3
9.4.2. Driver's seat (additional requirements) 9-3

9.5. INTERIOR LIGHTING AND DESTINATION DEVICES (X)2 9-3

9.6. GANGWAYS, STANDING AREAS 9-3

9.7. STAIRS AND STEPS. 9-3

9.8. PASSENGER COMMUNICATION SYSTEM (X)2 9-3

9.9. NOTICES (X)2 9-3

9.10. REQUIREMENTS REGARDING THE TRANSPORTATION OF CHILDREN. (X)2 9-4
9.10.1. Doors 9-4
9.10.2. Signalling and special equipment . . 9-4

9.11. REQUIREMENTS REGARDING THE TRANSPORTATION OF PERSONS WITH REDUCED MOBILITY (X)2. 9-4

9.11.1. Doors, ramps and lifts 9-4
9.11.2. Wheelchair restraint system 9-4
9.11.3. Signalling and special equipment . . 9-4

9.12. OTHER SPECIAL EQUIPMENT (X)2

. 9-4
9.12.1. Installations for food preparation . . . 9-4
9.12.2. Sanitary installation 9-4
9.12.3. Other devices (e.g. audio-visual systems) 9-4

9.1. Doors

9.1.1. Entrance and exit doors

M6180100100040

"Not Applicable"

9.1.2. Emergency exits

M6180100200047

"Not Applicable"

9.2. Demisting and defrosting system (X)2

M6180200000040

"Not Applicable"

9.3. Ventilation & heating system (X)2

M6180300000047

"Not Applicable"

9.4. Seats

9.4.1. Passenger seats (including seats for accompanying personnel)

M6180400100041

"Not Applicable"

9.4.2. Driver's seat (additional requirements)

M6180400200048

"Not Applicable"

9.5. Interior lighting and destination devices (X)2

M6180500000041

"Not Applicable"

9.6. Gangways, standing areas

M6180600000048

"Not Applicable"

9.7. Stairs and steps

M6180700000045

"Not Applicable"

9.8. Passenger communication system (X)2

M6180800000042

"Not Applicable"

9.9. Notices (X)2

M6180900000049

"Not Applicable"

9.10. Requirements regarding the transportation of children. (X)2

9.10.1. Doors

M6181000100046

"Not Applicable"

9.10.2. Signalling and special equipment

M6181000200043

"Not Applicable"

9.11. Requirements regarding the transportation of persons with reduced mobility (X)2

9.11.1. Doors, ramps and lifts

M6181100100043

"Not Applicable"

9.11.2. Wheelchair restraint system

M6181100200040

"Not Applicable"

9.11.3. Signalling and special equipment

M6181100300047

"Not Applicable"

9.12. Other special equipment (X)2

9.12.1. Installations for food preparation

M6181200100040

"Not Applicable"

9.12.2. Sanitary installation

M6181200200047

"Not Applicable"

9.12.3. Other devices (e.g. audio-visual systems)

M6181200300044

"Not Applicable"