GROUP 1

BRAKING EQUIPMENT

CONTENTS

1.1. MECHANICAL CONDITION AND OPERATION 1-2

1.1.1. Service brake pedal/hand lever pivot 1-2

1.1.2. Pedal/hand lever condition and travel of the brake operating device 1-2

1.1.3. Vacuum pump or compressor and reservoirs 1-2

1.1.4. Low pressure warning gauge or indicator 1-2

1.1.6. Parking brake activator, lever control, parking brake ratchet, electronic parking brake 1-3

1.1.8. Couplings for trailer brakes (electrical & pneumatic). 1-8

1.1.9. Energy storage reservoir pressure tank 1-8

1.1.11. Rigid brake pipes 1-8

1.1.12. Flexible brake hoses 1-8

1.1.13. Brake linings and pads 1-8

1.1.14. Brake drums, brake discs 1-9

1.1.15. Brake cables, rods, levers, linkages 1-11

1.1.16. Brake actuators (including spring brakes or hydraulic cylinders) 1-11

1.1.17. Load sensing valve 1-11

1.1.18. Slack adjusters and indicators 1-11

1.1.19. Endurance braking system (where fitted or required). 1-12

1.1.20. Automatic operation of trailer brakes 1-12

1.1.22. Test connections (where fitted or required). 1-12

1.1.23. Overrun brake 1-12

1.2. SERVICE BRAKING PERFORMANCE AND EFFICIENCY 1-12

1.2.1. Performance 1-12

1.2.2. Efficiency 1-12

1.3. SECONDARY (EMERGENCY) BRAKING PERFORMANCE AND EFFICIENCY (IF MET BY SEPARATE SYSTEM). 1-12

1.3.1. Performance 1-12

1.3.2. Efficiency 1-12

1.4. PARKING BRAKING PERFORMANCE AND EFFICIENCY 1-13

1.4.1. Performance 1-13

1.4.2. Efficiency 1-13

1.5. ENDURANCE BRAKING SYSTEM PERFORMANCE 1-13

1.6. ANTI-LOCK BRAKING SYSTEM (ABS). 1-13

1.7. ELECTRONIC BRAKE SYSTEM (EBS). 1-14

1.8. BRAKE FLUID 1-14

1.1. MECHANICAL CONDITION AND OPERATION

1.1.1. Service brake pedal/hand lever pivot

M90101010A0013

"Not Applicable"

1.1.2. Pedal/hand lever condition and travel of the brake operating device

M90101020A0010

"Not Applicable"

1.1.3. Vacuum pump or compressor and reservoirs

M90101030A0009

"Not Applicable"

1.1.4. Low pressure warning gauge or indicator

M90101040A0009

"Not Applicable"

1.1.6. Parking brake activator, lever control, parking brake ratchet, electronic parking brake

M90101060A0009

ELECTRIC PARKING BRAKE

CONSTRUCTION DIAGRAM

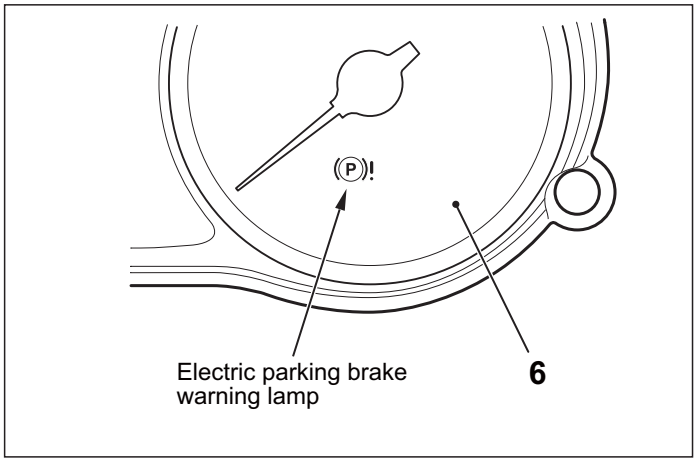

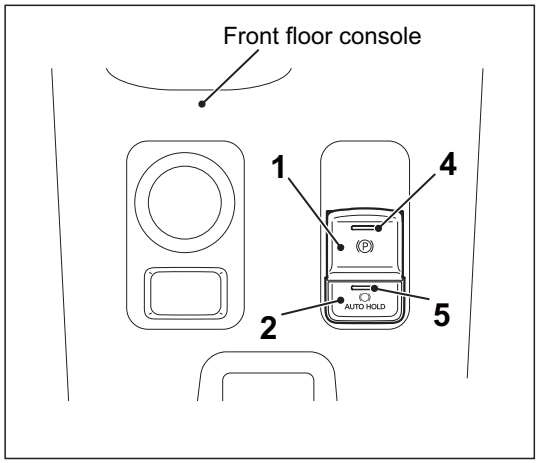

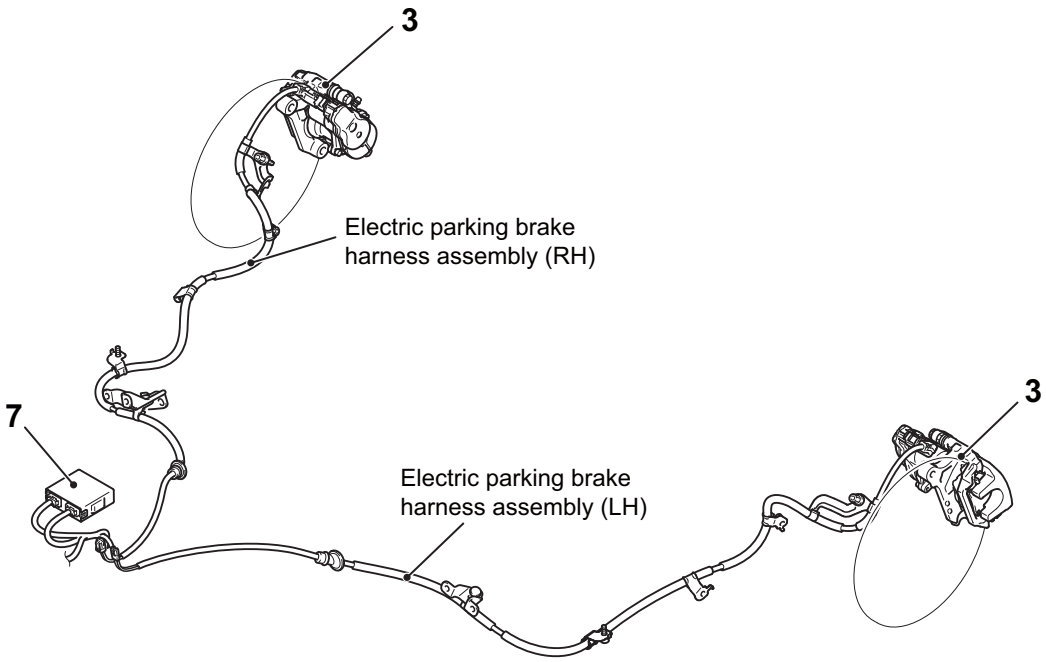

BCG01561AA

Item		Number	Outline of function
Sensor	Electric parking brake switch	1	Sends a signal to the electric parking brake ECU to apply and release the electric parking brake.
	Brake auto hold switch	2	The electric parking brake ECU provides the ASC-ECU with the brake auto hold switch ON/OFF information.

Item		Number	Outline of function
CAN bus signal	Shift information	-	Detects which range the selector lever is in, and sends a signal to the electric parking brake ECU via CAN bus lines.
	Accelerator pedal position sensor	-	Detects how deeply the accelerator pedal is depressed, and sends a signal to the electric parking brake ECU via CAN bus lines.
	Electric motor torque	-	Is provided to the electric parking brake ECU via the CAN bus lines.
	PHEV operation mode	-	Is provided to the electric parking brake ECU via the CAN bus lines.
	Wheel speed sensor	-	Detects the speed of road wheels, and sends a signal to the electric parking brake ECU via CAN bus lines.
	G sensor	-	Is incorporated in the ASC-ECU, detects longitudinal acceleration, and sends a signal to the electric parking brake ECU via CAN bus lines.
	Master cylinder fluid pressure sensor	-	Sends a signal to the electric parking brake ECU via the CAN bus lines. The system determines whether the brake pedal is depressed or not by using the signal.
	Brake auto hold switch indicator illumination request signal	-	Is provided to the electric parking brake ECU via the CAN bus lines.
	Coding information	-	Is sent to the electric parking brake ECU via the CAN bus lines.
	Power supply status	-	Is provided to the electric parking brake ECU via the CAN bus lines.
	Odometer reading	-	Is sent to the electric parking brake ECU via the CAN bus lines.
	Driver's seat belt fastened or unfastened	-	Is sent to the electric parking brake ECU via the CAN bus lines.
Actuator	Electric parking brake actuator	3	Activates the electric motor in accordance with the command from the electric parking brake ECU to regulate the parking brake.
	Electric parking brake switch indicator lamp	4	Informs the driver of the system status by flash, illuminating or turning off the indicator lamp according to the signal from electric parking brake ECU.
	Brake auto hold switch indicator lamp	5	The electric parking brake ECU activates or deactivates the brake auto hold switch indicator lamp according to the request sent by the ASC-ECU.
	Combination meter	6	Receives a signal from the electric parking brake ECU, and triggers the warning lamp, the multi-information display or the buzzer to alert the driver of the system status.
Diagnosis connector		-	Outputs the diagnosis codes and allows communication with the M.U.T.-III.
Electric parking brake ECU		7	Controls actuators (described above) based on the signals coming from each sensor.
			Controls the self-diagnostics and fail-safe functions.
			Controls the diagnostic function (M.U.T.-III compatible).

SYSTEM CONFIGURATION DIAGRAM

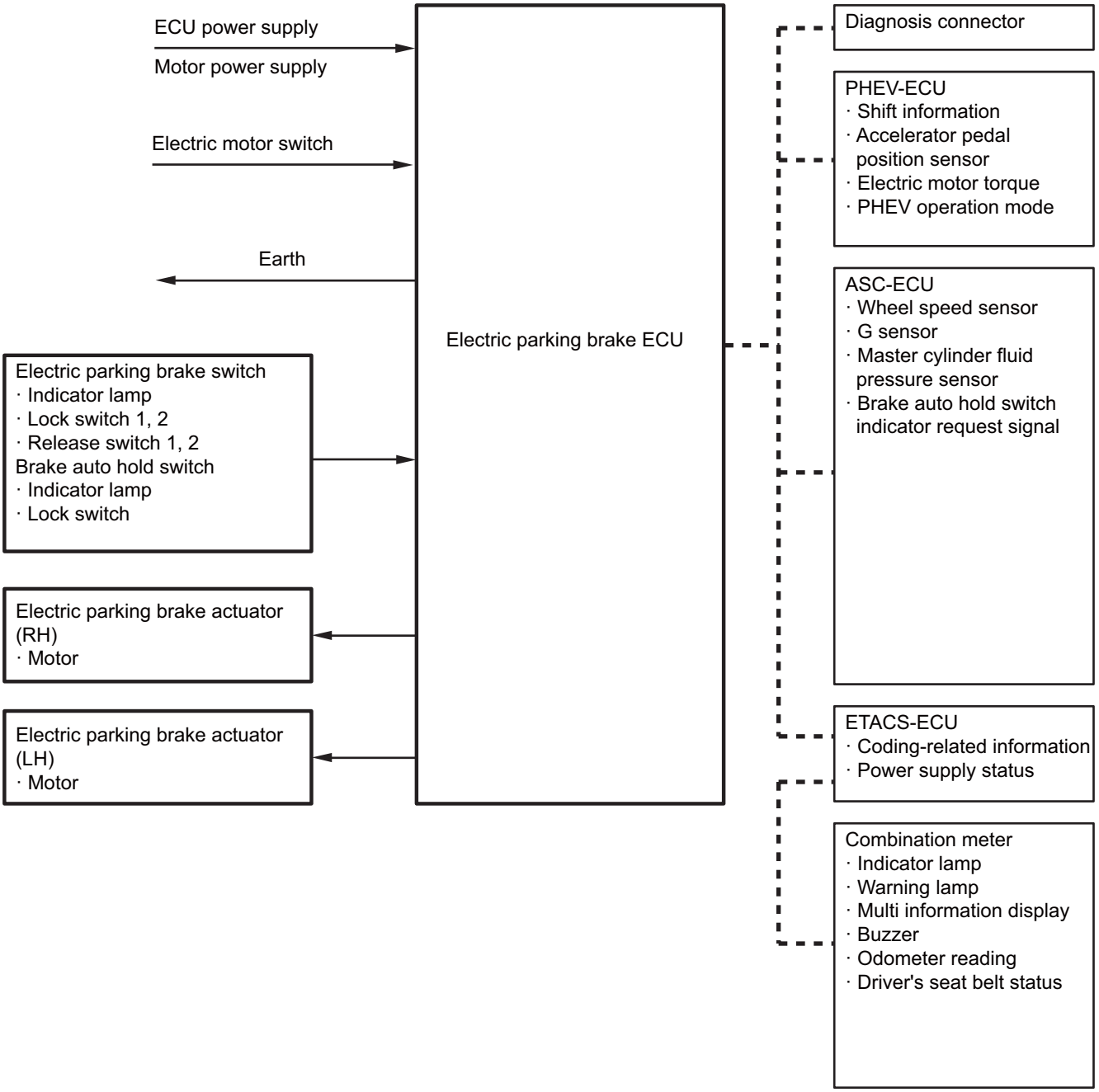

ACG01341AB

NOTE: Dashed lines indicate the CAN bus communication lines.

SENSOR

ELECTRIC PARKING BRAKE SWITCH

The electric parking brake switch is located on the front floor console panel. When the electric parking brake switch is operated regardless of the power supply mode of the electric motor switch, the electric parking brake is activated.

To apply (lock) the electric parking brake

1. Pull up the electric parking brake switch with the brake pedal depressed.
2. When the parking brake is applied, the brake warning lamp and the indicator lamp on the electric parking brake switch will illuminate.

NOTE:

- When turn on the power supply mode of the electric motor switch, if the parking brake is applied, the electric parking brake switch indicator lamp comes on for a while.
- When parking on sharp grades, pull up the electric parking brake switch twice (once more after the operation is completed once). The maximum effect of the parking brake will be obtained.

To apply the electric parking brake during driving (Emergency brake)

⚠ CAUTION

Use the emergency brake only in emergency. By the excessive use of the brake, the brake parts are possibly worn early and the brake is disabled by the overheat.

1. When you cannot avoid collision by depressing the brake pedal, you can allow the ASC-ECU to activate an emergency braking (brake all four wheels) by pulling the electric parking brake switch

   NOTE: Just in case the ASC-ECU fails, the electric parking brake ECU will brake the rear wheels only instead.
2. While holding it, the brake is applied. At this time, the warning display appears with a buzzer sound, but you should continue to pull and hold the electric parking brake switch.

To release the electric parking brake

1. Turn on the power supply mode of the electric motor switch, and press the electric parking brake switch with the brake pedal depressed.

   NOTE: When you depress the accelerator pedal, the electric parking brake will be disengaged automatically. For details, refer to "Automatic operation".
2. When the parking brake is released, the brake warning lamp and the indicator lamp on the electric parking brake switch will go out.

   NOTE: When the power supply mode is other than ON, the parking brake cannot be released.

BRAKE AUTO HOLD SWITCH

The brake auto hold switch (indicator) is located on the front floor console panel.

1. The electric parking brake ECU provides the ASC-ECU with the brake auto hold switch ON/OFF information. The ASC-ECU controls the brake auto hold function according to the ON/OFF information.
2. The electric parking brake ECU activates or deactivates the brake auto hold switch indicator lamp according to the request sent by the ASC-ECU.

ACTUATORS

ELECTRIC PARKING BRAKE ACTUATOR

- The electric parking brake actuator, which incorporates an electric motor, regulates the parking brake by actuating the electric motor.
- If the electric parking brake fails due to a flat battery or any other reason, it can be released by operating the electric parking brake actuator manually.

ELECTRIC PARKING BRAKE SWITCH INDICATOR LAMP AND COMBINATION METER

- The electric parking brake ECU illuminates the indicator lamp on the electric parking brake switch as described in the table below.
- The electric parking brake ECU illuminates the warning lamp on the combination meter as described in the table below. In addition, the ECU displays a warning notice on the multi-information display in the combination meter.

Warning lamp, indicator lamp and multi information display illumination pattern

State	Brake warning lamp	Electric parking brake warning lamp	Multi information display	Electric parking brake switch indicator lamp
For approximately 3 seconds after turn on the power supply mode of the electric motor switch (Initial check for the warning lamp).	Illuminates	Illuminates	-	-
The electric parking brake is applied	Illuminates*1	-	-	Illuminates*1
The electric parking brake is applied during driving (Emergency brake) *2	Illuminates	-	RELEASE PARKING BRAKE	Illuminates
The vehicle is held stationary by the electric parking brake instead of the ASC-ECU (brake auto hold mode).	Illuminates	-	PARKING BRAKE ENGAGED	Illuminates
The electric parking brake is released	-	-	-	-
The driver attempted to release the electric parking brake without depressing the brake pedal when the selector lever is not in P range.	Illuminates	-	PRESS BRAKE PEDAL TO RELEASE	Illuminates
The vehicle starts off when the seat belt is not worn and the electric parking brake is not released.	Illuminates	-	RELEASE PARKING BRAKE	Illuminates
The overheat protection mode for electric motor is triggered.	Flash (1 Hz)	-	PARKING BRAKE TEMPORARILY NOT AVAILABLE	Flash (1 Hz)
You make the system enter the maintenance mode (by using the M.U.T.-III).	Flash (1 Hz)	-	-	Flash (1 Hz)
You make the system enter the maintenance mode (by using the switch).	Flash (1 Hz)	Illuminates	PARKING BRAKE SERVICE REQUIRED	Flash (1 Hz)

NOTE:

- *1: When the power supply mode is other than ON, if the parking brake is applied, the electric parking brake switch indicator lamp comes on for a while. The brake warning lamp does not come on.
- *2: The buzzer (incorporated in the combination meter) sounds.
- : For how the warning lamp, the indicator lamp and the multi-information display work when a malfunction occurs, refer to the relevant Workshop Manual.

ELECTRIC PARKING BRAKE ECU

- The electric parking brake ECU determines the vehicle status according to the electric parking brake switch signal and CAN communication, and regulates the parking brake by actuating the electric parking brake actuator.
- The electric parking brake ECU supports self-diagnosis and memory functions. If the self-diagnosis finds a malfunction, the ECU will activate the indicator lamp, the warning lamp or the multi-information display to alert the driver of the system status.

Automatic operation

When you depress the accelerator pedal with all of the conditions below satisfied, the electric parking brake ECU will determine that the driver is starting the vehicle, and release the parking brake automatically.

Vehicle condition

- The vehicle stationary
- Ready indicator is illuminated.
- Selector lever: D or R position
- Seat belt (driver's side): Fastened
- Electric parking brake: apply

NOTE: The automatic operation works only when the driver's seat belt is fastened. If you start the vehicle without fastening the seat belt, the multi-information display should show "RELEASE PARKING BRAKE".

Overheat protection mode for electric motor

When the electric parking brake switch is operated repeatedly within a short time, the system will take the measures below for 60 seconds to protect the electric parking brake actuator (electric motor) from overheating. In 60 seconds, the system will reset the switch operation counter, and then resume to the normal operation.

Measures

- The system does not accept any operations of the electric parking brake switch for 60 seconds. However, the system enables the driver to operate the switch once to release the parking brake when the electric motor is locked with the overheat protection mode triggered (the system does not enable the driver to operate the switch to apply the parking brake).
- When the ASC-ECU requests the system to apply the parking brake, the system accepts the request.
- The system perform the followings while the electric motor is disabled to run:
  - Electric parking brake switch indicator lamp: Flashes for 60 seconds
  - Parking brake warning lamp: Flashes for 60 seconds
  - Multi-information display: "PARKING BRAKE TEMPORARILY NOT AVAILABLE" is displayed

Maintenance mode

The electric parking brake ECU will enter the maintenance mode when the switch is operated in certain ways. When the system enters the maintenance mode, the electric parking brake will be released to facilitate replacement of the rear brake pad or the rear disc brake rotor.

1.1.8. Couplings for trailer brakes (electrical & pneumatic)

M90101080A0009

"Not Applicable"

1.1.9. Energy storage reservoir pressure tank

M90101090A0009

"Not Applicable"

1.1.11. Rigid brake pipes

M90101110A0009

"Not Applicable"

1.1.12. Flexible brake hoses

M90101120A0009

"Not Applicable"

1.1.13. Brake linings and pads

M90101130A0009

BRAKE PAD CHECK <FRONT>

⚠ CAUTION

If there is a significant difference in thickness between the brake pads at right and left, check the sliding area and the run-out of the brake disc.

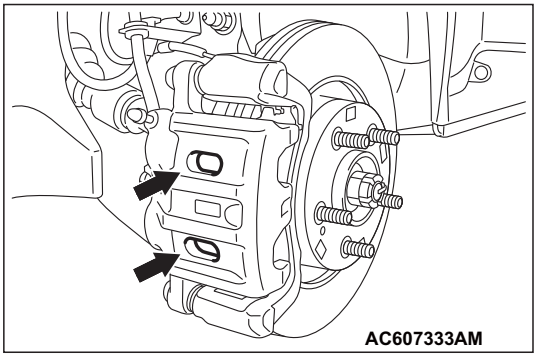

1. Visually check the thickness of brake pad from the inspection hole of the caliper body.

   Standard value: 10.0 mm
   Limit: 2.0 mm
2. If the brake pad thickness is less than the limit value, replace the brake pad.

<REAR>

⚠ CAUTION
If there is a significant difference in thickness between the brake pads at right and left, check the sliding area and the run-out of the brake disc.

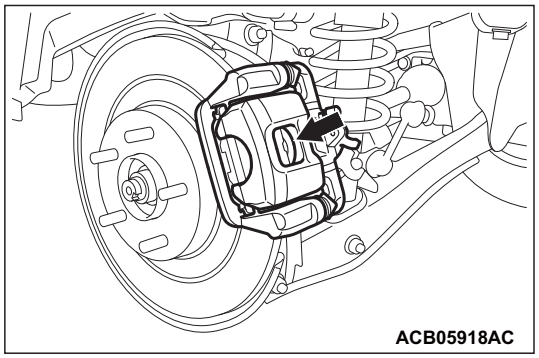

1. Visually check the thickness of brake pad from the inspection hole of the caliper body.
   Standard value: 9.0 mm
   Limit: 2.0 mm
2. If the brake pad thickness is less than the limit value, replace the brake pad.

1.1.14. Brake drums, brake discs

M90101140A0009

BRAKE DISC CHECK

BRAKE DISC THICKNESS CHECK

1. Remove contaminants or corrosion from the brake disc surface.

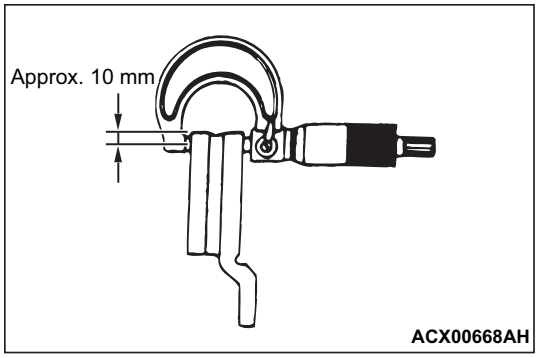

2. Use a micrometer to measure the brake disc thickness at minimum eight points which are 10 mm inward from its circumference.
   <Front (Vehicles with 16 inch disc brake)>
   Standard value: 24.0 mm
   Limit: 22.4 mm
   <Front (Vehicles with 17 inch disc brake)>
   Standard value: 28.0 mm
   Limit: 26.4 mm
   <Rear>
   Standard value: 10.0 mm
   Limit: 8.4 mm
3. If the brake disc thickness is worn beyond the limit value at more than one point, replace the brake disc and check its run-out.

BRAKE DISC THICKNESS UNEVENNESS CHECK AND CORRECTION

1. Remove contaminants or corrosion from the brake disc surface.

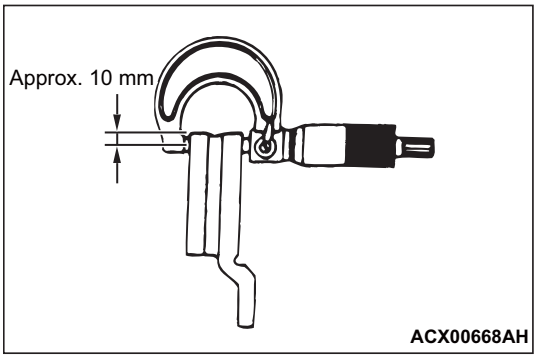

2. Use a micrometer to measure the brake disc thickness at minimum eight points which are 10 mm inward from its circumference. Then record the measurements.
3. If the brake disc thickness unevenness (the difference between the maximum and minimum values measured above) is 0.015 mm or less, it is within the standard value.
4. If the brake disc thickness unevenness exceeds the standard value, grind it according to the procedure below while it is mounted on the vehicle.

   NOTE: If it is suspected that the brake disc thickness will become less than the limit value after the grinding, replace the brake disc and check its run-out.
   (1) Check for wheel bearing looseness in the axial direction.

⚠ CAUTION

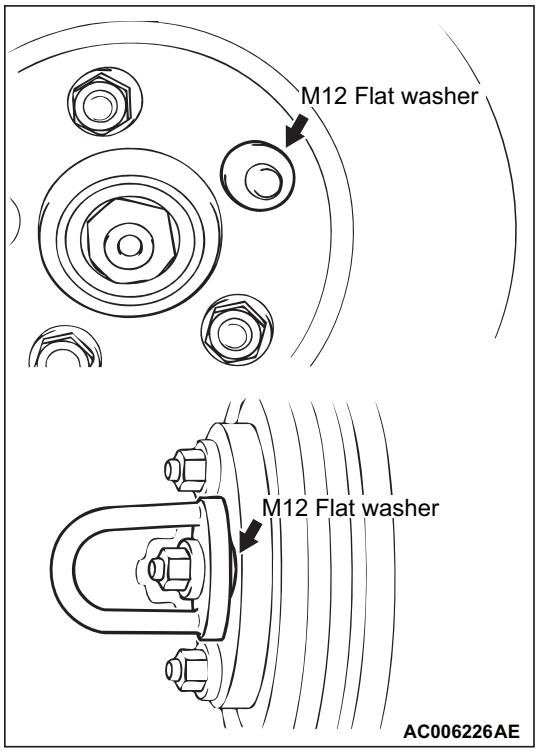

Insert M12 plain washer and then install the adapter as shown before grinding. Failure to use the M12 plain washer will cause the brake disc to be deformed and earth incorrectly.

- **To grind the brake disc, ensure that all the nuts (M12×1.5) are tightened evenly and in a diagonal sequence to the specified torque (100 N·m). Failure to use all the nuts (M12×1.5), excessive or uneven tightening torque will cause the brake disc to deform or judder.**

(2) Correct the brake disc uneven thickness by grinding it while in place on the vehicle.

BRAKE DISC RUN-OUT CHECK AND CORRECTION

1. Check for wheel bearing looseness in the axial direction.
2. If the axial play is within the limit value, secure the brake disc by tightening the nut (M12×1.5) evenly to the specified torque (100 N·m).If the axial play still exceeds the limit value, replace the wheel bearing. Then secure the brake disc by tightening the nut (M12×1.5) evenly to the specified torque (100 N·m).

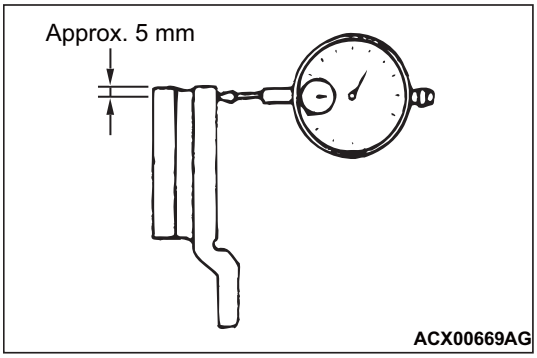

3. Place a dial gauge ca. 5 mm inward from the circumference of the brake disc to measure its run-out.

   Limit:
   0.06 mm <Front>
   0.08 mm <Rear>

4. If the brake disc run-out exceeds the limit value, rephase the brake disc to the hub so that the minimum brake disc run-out is obtained.

⚠ CAUTION

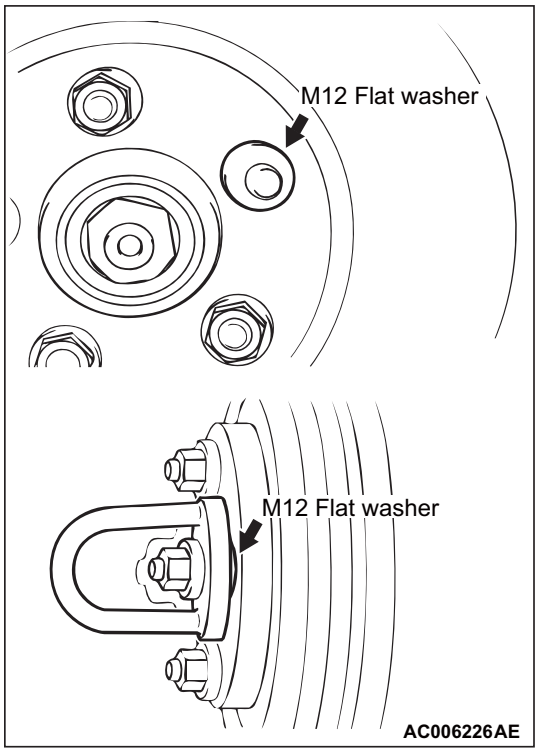

Insert M12 plain washer and then install the adapter as shown before grinding. Failure to use the M12 plain washer will cause the brake disc to be deformed and earth incorrectly.

- **To grind the brake disc, ensure that all the nuts (M12×1.5) are tightened evenly and in a diagonal sequence to the specified torque (100 N·m). Failure to use all the nuts (M12×1.5), excessive or uneven tightening torque will cause the brake disc to deform or judder.**

5. If the brake disc run-out exceeds the limit value after rephasing, grind the disc while in place on the vehicle so that the brake disc run-out is within the limit value.

NOTE: If it is suspected that the brake disc thickness will be below the limit value, replace the brake disc. Then rephase the brake disc so that the minimum brake disc run-out is obtained, or grind the disc while in place on the vehicle so that its run-out is below the limit value.

1.1.15. Brake cables, rods, levers, linkages

M90101150A0009

"Not Applicable"

1.1.16. Brake actuators (including spring brakes or hydraulic cylinders)

M90101160A0009

"Not Applicable"

1.1.17. Load sensing valve

M90101170A0009

"Not Applicable"

1.1.18. Slack adjusters and indicators

M90101180A0009

"Not Applicable"

1.1.19. Endurance braking system (where fitted or required)

M90101190A0009

"Not Applicable"

1.1.20. Automatic operation of trailer brakes

M90101200A0009

"Not Applicable"

1.1.22. Test connections (where fitted or required)

M90101220A0009

"Not Applicable"

1.1.23. Overrun brake

M90101230A0009

"Not Applicable"

1.2. SERVICE BRAKING PERFORMANCE AND EFFICIENCY

1.2.1. Performance

M90102010A0010

BRAKE DRAG FORCE CHECK

1. Remove the brake pad, shim and clip.

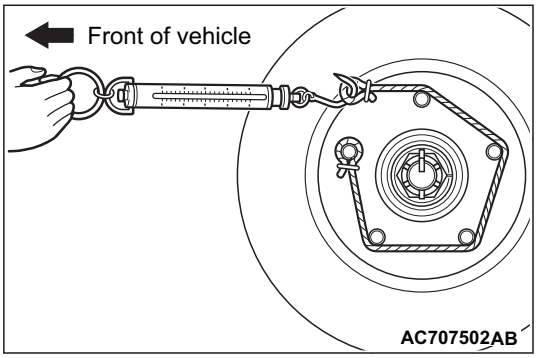

2. Using a spring scale, measure the hub sliding torque in the forward direction with the brake pad, shim and clip removed.
3. Install the brake pad, shim and clip.
4. The power supply mode of the electric motor switch turned ON, and depress the brake pedal lightly two or three times. Then the power supply mode of the electric motor switch turned OFF. (Depressing force: approximately 50 - 100 N)
5. Turn the brake disc 10 times in the forward direction.
6. Using a spring scale, measure the hub sliding torque in the forward direction with the brake pad, shim and clip installed.
7. Obtain the disc brake drag force (difference between measured values of item 2 and item 6).

   Standard value: 68 N or less
8. If the brake drag force exceeds the standard value, disassemble the brake caliper assembly to check for fouling/rust on the piston sliding section and piston seal deterioration, and confirm whether the guide pin and lock pin slide properly.

1.2.2. Efficiency

M90102020A0009

"Not Applicable"

1.3. SECONDARY (EMERGENCY) BRAKING PERFORMANCE AND EFFICIENCY (IF MET BY SEPARATE SYSTEM)

1.3.1. Performance

M90103010A0008

The FCM has the same system as the basic brake.
(Refer to 1.2.1. Performance P.1-12)

1.3.2. Efficiency

M90103020A0008

"Not Applicable"

1.4. PARKING BRAKING PERFORMANCE AND EFFICIENCY

1.4.1. Performance

M90104010A0008

Refer to 1.2.1. Performance P.1-12.

1.4.2. Efficiency

M90104020A0008

"Not Applicable"

1.5. ENDURANCE BRAKING SYSTEM PERFORMANCE

M90105000A0008

"Not Applicable"

1.6. ANTI-LOCK BRAKING SYSTEM (ABS)

M90106000A0008

ABS WARNING LAMP, ASC WARNING/OPERATION LAMP, BRAKE WARNING LAMP AND BRAKE AUTO HOLD INDICATOR CHECK

Check that ABS and brake warning lamps, ASC warning/operation lamp, brake auto hold indicator illuminate as follows.

NOTE: The brake warning lamp is used as a warning lamp for parking brake, brake fluid level, and EBD control.

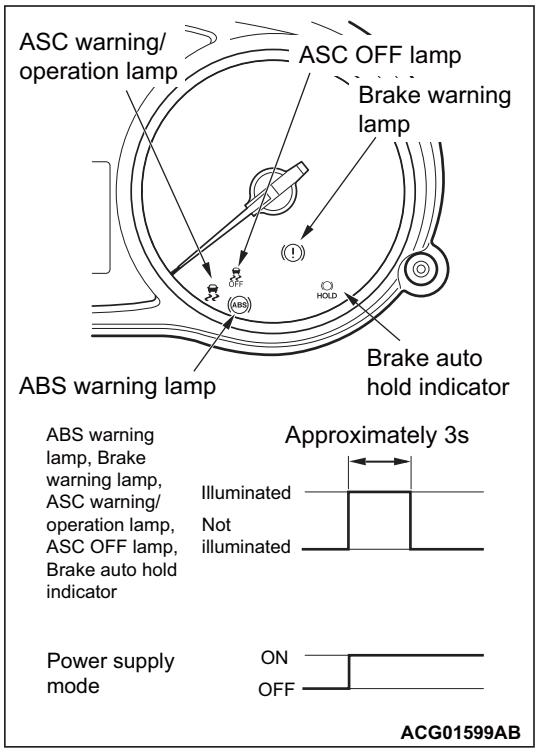

1. When the electric motor switch is turned ON, ABS and brake warning lamps, ASC warning/operation lamp, ASC OFF lamp, brake auto hold indicator illuminate.
2. The ABS and brake warning lamps, ASC warning/operation lamp, ASC OFF lamp, brake auto hold indicator illuminate for three seconds[*1] and then turn OFF[*2].
3. Otherwise, check the diagnosis code.

NOTE:

- [*1]: The ABS warning lamp, ASC warning/operation lamp, ASC OFF lamp may stay ON until the vehicle speed reaches 10 km/h. As far as ASC-ECU sets any diagnosis code related to the wheel speed sensor malfunction or the motor malfunction as past trouble, ASC-ECU continues illuminating the ABS warning lamp until it verifies that the malfunction for that code is resolved (startup check).
  If the steering wheel sensor or the G and yaw rate sensor system was detected to be defective during power supply mode of the electric motor switch being ON at the last time, the ASC warning/operation lamp and the ASC OFF lamp will illuminate until the vehicle speed reaches approx. 10 km/h, then the steering wheel is turned to either right or left and then the ECU determines that the system is normal.
- [*2]: The brake warning lamp does not turn OFF when the parking brake is applied or the brake fluid level is lowered.

1.7. ELECTRONIC BRAKE SYSTEM (EBS)

M90107000A0009

"Query raised for this content"

1.8. BRAKE FLUID

M90108000A0009

"Not Applicable"

GROUP 2

STEERING

CONTENTS

2.1. MECHANICAL CONDITION 2-2

2.1.1. Steering gear condition 2-2

2.1.2. Steering gear casing attachment . . . 2-2

2.1.3. Steering linkage condition 2-2

2.1.4. Steering linkage operation 2-2

2.1.5. Power steering 2-2

2.2. STEERING WHEEL, COLUMN AND HANDLE BAR 2-2

2.2.1. Steering wheel/handle bar condition 2-2

2.2.2. Steering column/yokes and forks and steering dampers 2-2

2.3. STEERING PLAY. 2-2

2.4. WHEEL ALIGNMENT (X)2 2-2

2.5. TRAILER STEERED AXLE TURNTABLE. 2-2

2.6. ELECTRONIC POWER STEERING (EPS) 2-3

2.1. MECHANICAL CONDITION

2.1.1. Steering gear condition

M90201010A0009

"Not Applicable"

2.1.2. Steering gear casing attachment

M90201020A0009

"Not Applicable"

2.1.3. Steering linkage condition

M90201030A0009

"Not Applicable"

2.1.4. Steering linkage operation

M90201040A0011

"Not Applicable"

2.1.5. Power steering

M90201050A0009

"Not Applicable"

2.2. STEERING WHEEL, COLUMN AND HANDLE BAR

2.2.1. Steering wheel/handle bar condition

M90202010A0008

"Not Applicable"

2.2.2. Steering column/yokes and forks and steering dampers

M90202020A0008

"Not Applicable"

2.3. STEERING PLAY

M90203000A0008

"Not Applicable"

2.4. WHEEL ALIGNMENT (X)2

M90204000A0008

"Not Applicable"

2.5. TRAILER STEERED AXLE TURNTABLE

M90205000A0008

"Not Applicable"

2.6. ELECTRONIC POWER STEERING (EPS)

M90206000A0008

CONSTRUCTION DIAGRAM

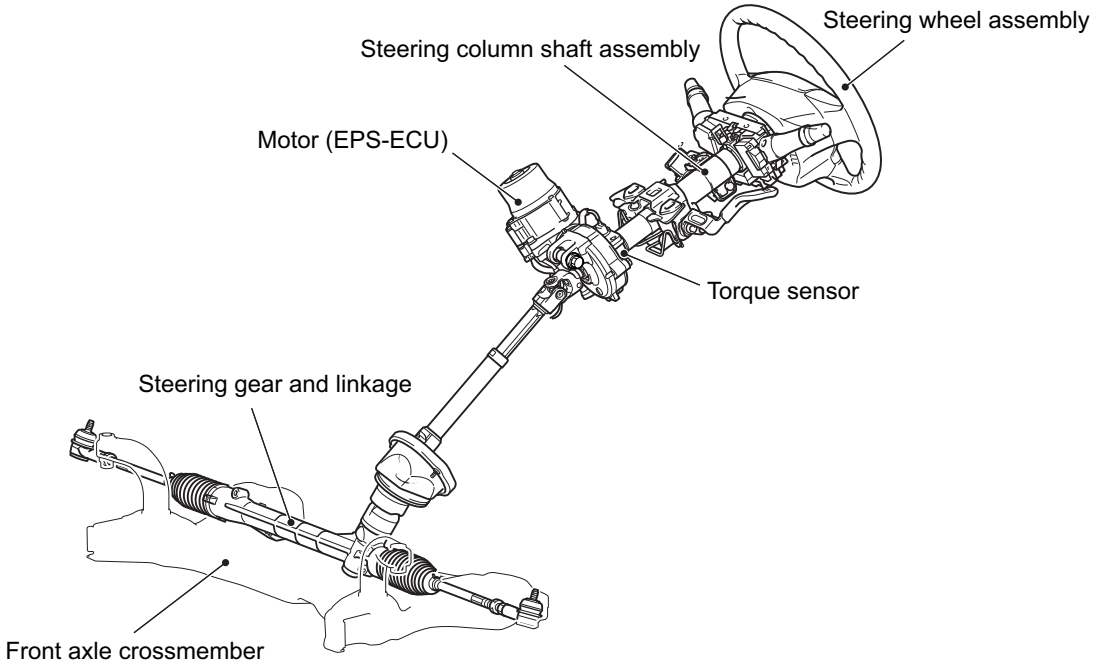

ACI01943AB

CHECK OF ELECTRIC POWER STEERING WARNING LAMP

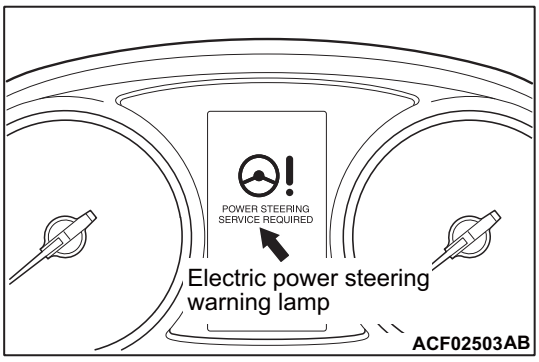

ACF02503AB

If the electric power steering warning lamp does not operate, the electric power steering system or the combination meter may be defective. Check for diagnosis code, and carry out diagnosis. If no diagnosis codes are set, carry out diagnosis by referring to the electric power steering warning lamp-related inspection items on the trouble symptom chart.

CHECK STEERING LINKAGE FOR DAMAGE AND LOOSE CONNECTIONS (INCLUDING SEALS AND BOOTS)

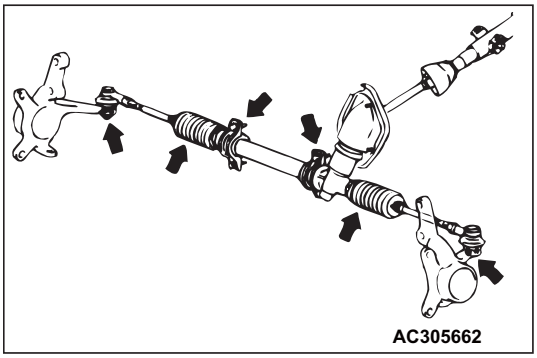

AC305662

1. Move the steering wheel bit by bit to the left or right, and check to be sure that there is no play or looseness in the linkage coupling, that the installation is not loose, and that the rod or arm is not bent or damaged.

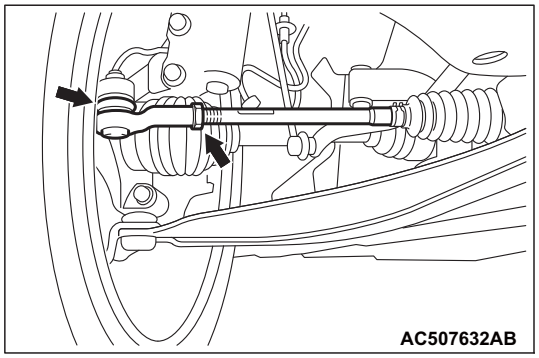

2. Check to be sure that the seal and boot of the ball joint are correctly installed (in the correct position), and that they are not damaged.
3. Check tie-rod end lock nut for looseness. If lock nut is loose, adjust toe-in and then tighten lock nut to the specified torque.

   Tightening torque: 52 ± 2 N·m

GROUP 3

VISIBILITY

CONTENTS

3.1. FIELD OF VISION 3-2
3.2. CONDITION OF GLASS 3-2
3.3. REAR-VIEW MIRRORS OR DEVICES 3-2
3.4. WINDSCREEN WIPERS 3-2
3.5. WINDSCREEN WASHERS 3-2
3.6. DEMISTING SYSTEM (X)2 3-2

3.1. FIELD OF VISION

M90301000A0008

"Not Applicable"

3.2. CONDITION OF GLASS

M90302000A0008

"Not Applicable"

3.3. REAR-VIEW MIRRORS OR DEVICES

M90303000A0008

"Not Applicable"

3.4. WINDSCREEN WIPERS

M90304000A0008

"Not Applicable"

3.5. WINDSCREEN WASHERS

M90305000A0008

"Not Applicable"

3.6. DEMISTING SYSTEM (X)2

M90306000A0008

"Not Applicable"

GROUP 4

LAMPS, REFLECTORS AND ELECTRICAL EQUIPMENT

CONTENTS

4.1. HEADLAMPS 4-3
4.1.1. Condition and operation 4-3
4.1.2. Alignment 4-4
4.1.3. Switching 4-6
4.1.4. Compliance with requirements1 4-6
4.1.5. Levelling devices (where mandatory) 4-7
4.1.6. Headlamp cleaning device (where mandatory) 4-11

4.2. FRONT AND REAR POSITION LAMPS, SIDE MARKER LAMPS, END OUTLINE MARKER LAMPS AND DAYTIME RUNNING LAMPS . . 4-12
4.2.1. Condition and operation 4-12
4.2.2. Switching 4-12
4.2.3. Compliance with requirements1 4-12

4.3. STOP LAMPS 4-12
4.3.1. Condition and operation 4-12
4.3.2. Switching 4-12
4.3.3. Compliance with requirements1 4-21

4.4. DIRECTION INDICATOR AND HAZARD WARNING LAMPS 4-21
4.4.1. Condition and operation 4-21
4.4.2. Switching 4-21
4.4.3. Compliance with requirements1 4-21
4.4.4. Flashing frequency 4-21

4.5. FRONT AND REAR FOG LAMPS 4-21
4.5.1. Condition and operation 4-21
4.5.2. Alignment (X)2 4-21
4.5.3. Switching 4-21
4.5.4. Compliance with requirements1 4-21

4.6. REVERSING LAMPS 4-21
4.6.1. Condition and operation 4-21
4.6.2. Compliance with requirements1 4-21
4.6.3. Switching 4-21

4.7. REAR REGISTRATION PLATE LAMP 4-22
4.7.1. Condition and operation 4-22
4.7.2. Compliance with requirements1 4-22

4.8. RETRO-REFLECTORS, CONSPICUITY (RETRO REFLECTING) MARKINGS AND REAR MARKING PLATES 4-22

4.8.1. Condition 4-22

4.8.2. Compliance with requirements1. 4-22

4.9. TELL-TALES MANDATORY FOR LIGHTING EQUIPMENT 4-22

4.9.1. Condition and operation 4-22

4.9.2. Compliance with requirements1. 4-22

4.10. ELECTRICAL CONNECTIONS BETWEEN TOWING VEHICLE AND TRAILER OR SEMI-TRAILER . . 4-22

4.11. ELECTRICAL WIRING 4-22

4.12. NON OBLIGATORY LAMPS AND RETRO-REFLECTORS (X)2. 4-22

4.13. BATTERY(IES) 4-23

4.1. HEADLAMPS

4.1.1. Condition and operation

M90401010A0008

Construction diagram

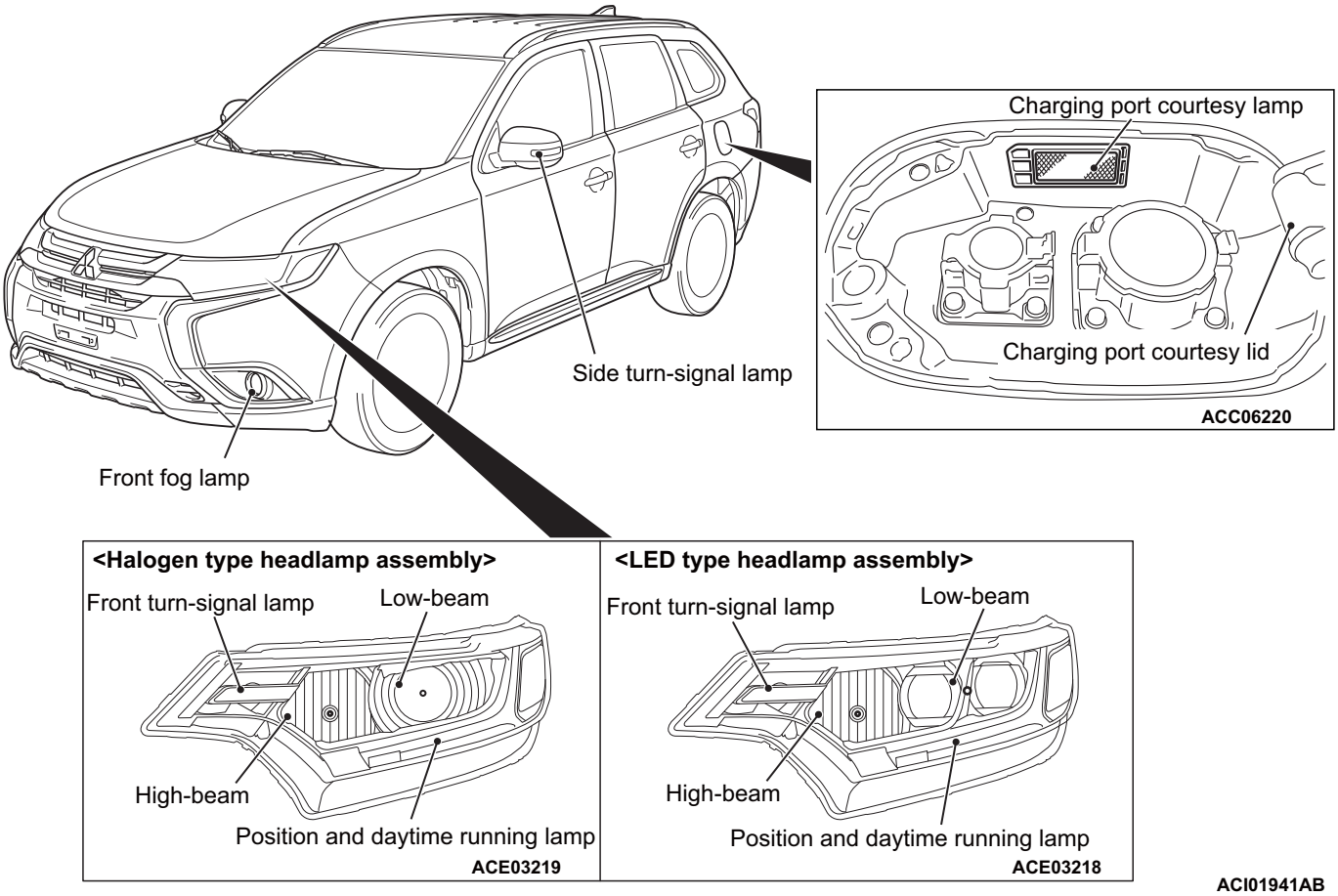

ACI01941AB

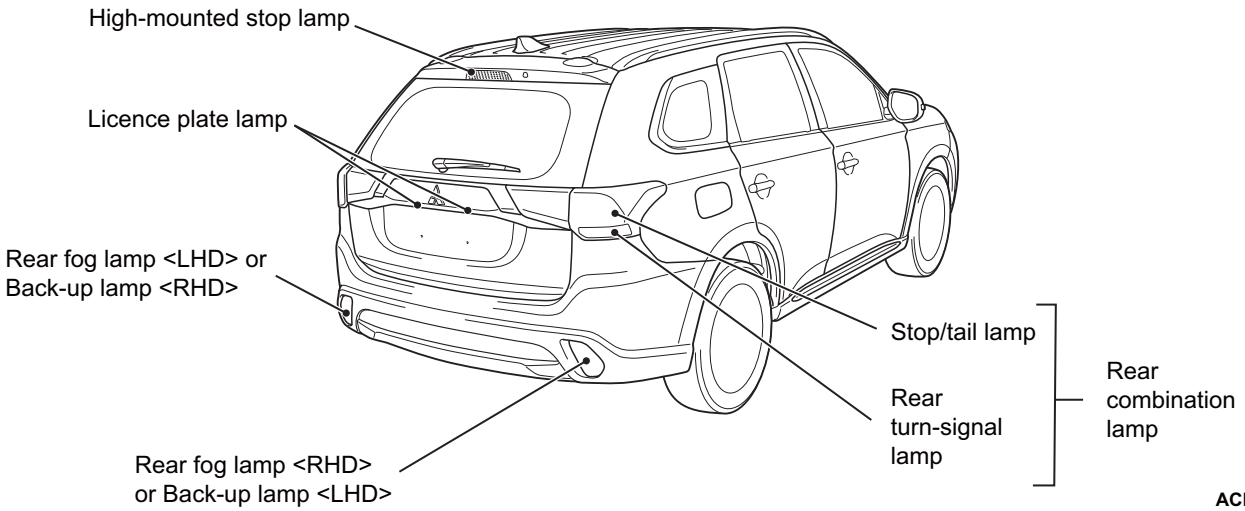

ACI01942AB

4.1.2. Alignment

M90401020A0008

<USING A BEAM SETTING EQUIPMENT>

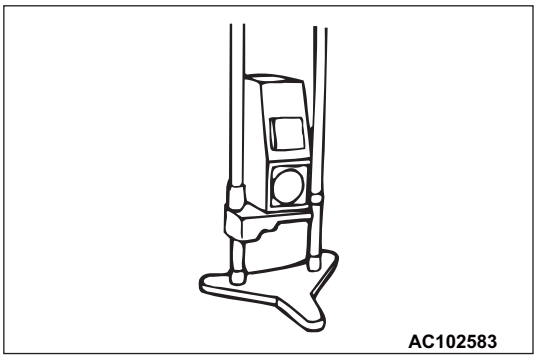
AC102583

1. The headlamps should be aimed with the proper beam setting equipment, and in accordance with the equipment manufacture's instructions.
2. Alternately turn the adjusting screw to adjust the headlamp aiming.

<USING A SCREEN> (LOW-BEAM)

PRE-AIMING INSTRUCTION

1. Inspect for badly rusted or faulty headlamp assemblies.
2. These conditions must be corrected before a satisfactory adjustment can be made.
3. Inspect tyre inflation, and adjust if it is necessary.
4. If the fuel tank is not filled up, put weight in the luggage compartment to make up for the fuel shortage so that the weight will become 90% of full-state weight or heavier. (0.8 kg per litter)
5. There should be no other load in the vehicle other than driver or substituted weight of approximately 75 kg placed in driver's position.
6. Turn the headlamp levelling switch to the switch position "0." <Vehicles with headlamp manual levelling system>
7. Change the vehicle posture, and then operate the actuator of headlamp levelling unit once. <Vehicles with headlamp automatic levelling system>
8. Thoroughly clean the headlamp lenses.

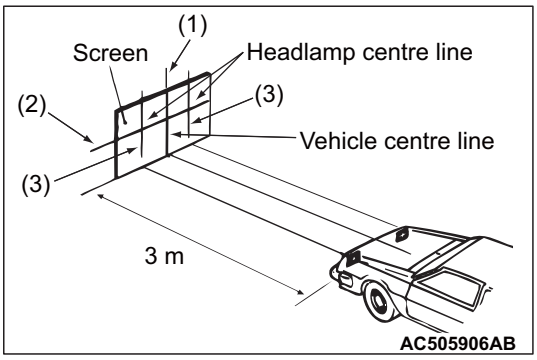

AC505906AB

<Vehicles with halogen headlamp>

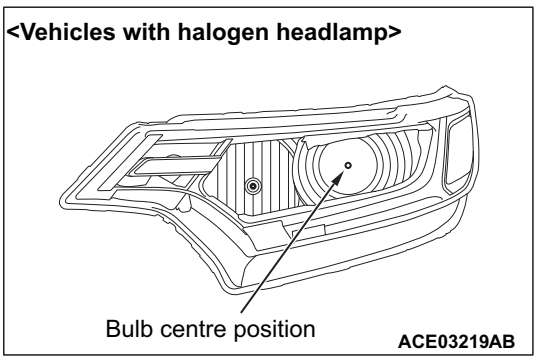

ACE03219AB

<Vehicles with LED headlamp>

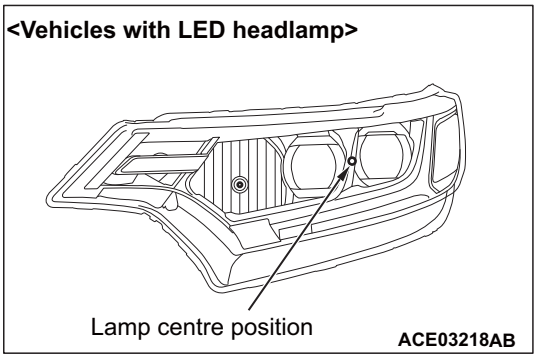

ACE03218AB

9. Place the vehicle on a level floor, perpendicular to a flat screen 3 m away from the bulb centre position of the low-beam.
10. Rock vehicle sideways to allow vehicle to assume its normal position.
11. To correct for distortion of the suspension, rock the bumpers on the front/rear side of the vehicle up and down three times alternately.
12. Run the engine at a speed of 2,000 r/min to charge the battery.
13. Four lines of adhesive tape (or equivalent markings) are required on screen or wall:
    (1) Position a vertical tape or mark so that it is aligned with the vehicle centre line.
    (2) Measure the distance from the bulb centre position to the floor. Transfer the measurement to the screen. Horizontal tape or mark on the screen is for reference of vertical adjustment.

(3) Measure the distance from the centre line of the vehicle to the centre of each headlamp. Transfer the measurement to the screen. Vertical tape or mark on the screen with reference to the centre line of each headlamp bulb.

HEADLAMP ADJUSTMENT

⚠ CAUTION
Do not cover a headlamp for more than three minutes to prevent the plastic headlamp lens deformation.

1. The low-beam headlamp should project on the screen upper edge of the beam (cut-off).

⚠ CAUTION
Be sure to adjust the aiming adjustment screw in the tightening direction.

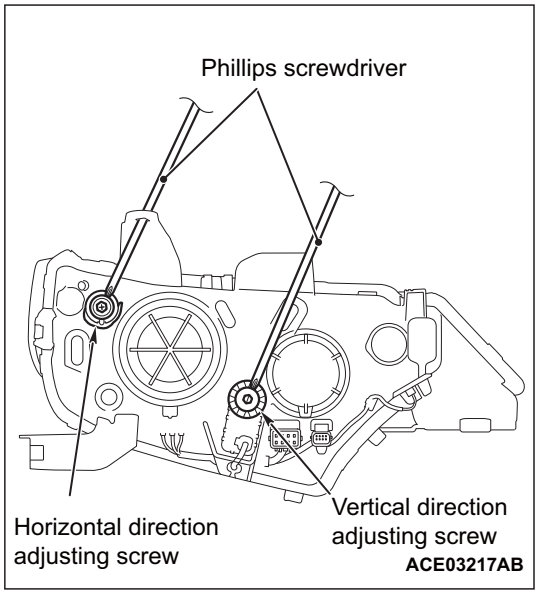

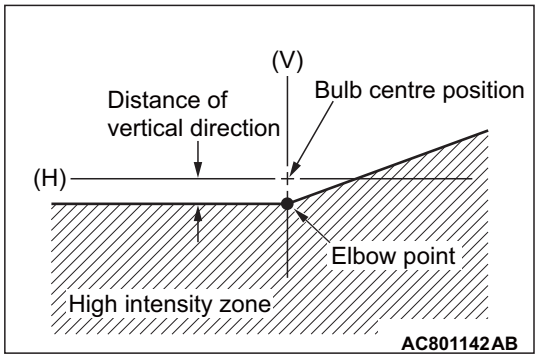

2. If not the case, turn the adjusting screws to achieve the specified low-beam cut-off location on the aiming screen.

   Standard value:
   Vertical direction; 36 mm (0.69°) below horizontal (H)
   Horizontal direction; Elbow point intersects the vertical line (V)

   Limit:
   Vertical direction; ±15 mm (±0.29°) from the horizontal cut-off line
   Horizontal direction; ± 26 mm (± 0.5°) from the vertical line (V)

NOTE: The illustration shows LH drive vehicles. For RH drive vehicles, it is symmetrical.

4.1.3. Switching

M90401030A0008

Headlamps

NOTE:

- Do not leave the lights on for a long time while the Plug-in Hybrid EV System is stationary (not operating). A run-down auxiliary battery could result.
- When it rains, or when the vehicle has been washed, the inside of the lens sometimes becomes foggy, but this does not indicate a functional problem. When the lamp is switched on, the heat will remove the fog. However, if water gathers inside the lamp, we recommend you to have checked.

Rotate the switch to turn on the lamps.

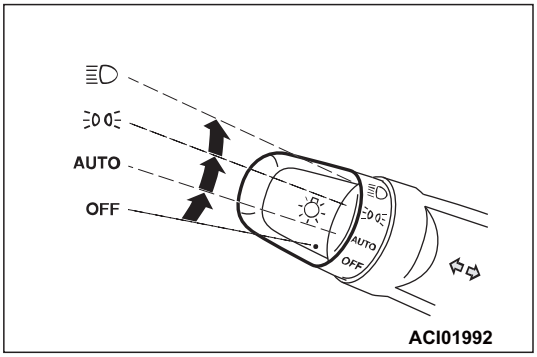

OFF	All lamps off {except for daytime running lamps}
AUTO	With the operation mode of the power switch is in ON, headlamps, position, tail, licence plate, instrument panel lamps and downlight turn on and off automatically in accordance with outside light level. {Daytime running lamps will go on while the tail lamps are off.} All lamps go off automatically when the operation mode is put in OFF.
	Position, tail, licence plate, instrument panel lamps and downlight on
	Headlamps and other lamps go on

NOTE:

- The sensitivity of the automatic on/off control can be adjusted. For further information, contact a MITSUBISHI MOTORS Authorised Service Point.On vehicles equipped with the Smartphone Link Display Audio or the Mitsubishi Multi-Communication System (MMCS), screen operations can be used to make the adjustment.Refer to the separate owner's manual for details.
- When the headlamps are turned off by the automatic on/off control with the operation mode in ON, the front fog lamps and rear fog lamps also go off. When the headlamps are subsequently turned back on by the automatic on/off control, the front fog lamps also come on but the rear fog lamp stay off. If you wish to turn the rear fog lamp back on, operate the switch again.

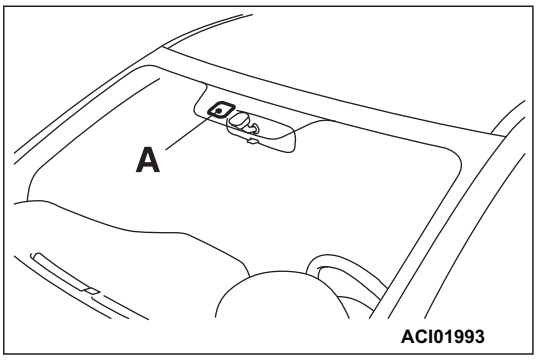

Do not cover the sensor (A) for the automatic on/off control by affixing a sticker or label to the windscreen.

- If the lamps do not turn on or off with the switch in the "AUTO" position, manually operate the switch and we recommend you to have your vehicle checked.

4.1.4. Compliance with requirements1.

M90401040A0008

"Not Applicable"

4.1.5. Levelling devices (where mandatory)

M90401050A0008

Headlamp manual levelling system

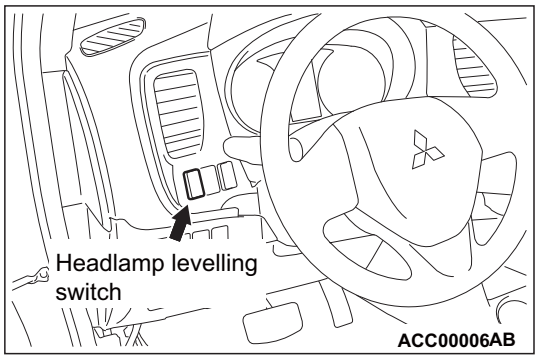

The beam direction of the headlamps changes according to the number of passengers and the amount of load. The headlamp manual levelling function is a system that allows the driver to change the direction of headlamp beam so that the drivers of oncoming cars are not dazzled by the headlamps. The headlamp levelling switch allows changing the direction in five steps: 0 to 4.

Relationship between the switch positions and the number of passengers/loads

<5-seating>

Passenger and load	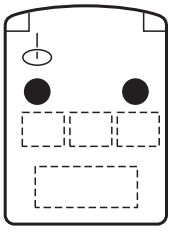 AC607611	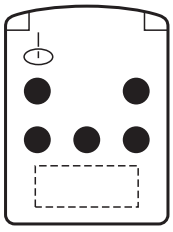 AC607612	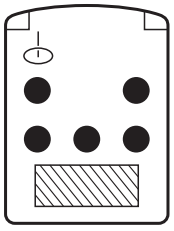 AC607613	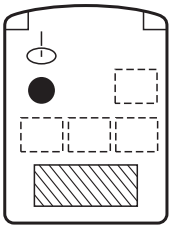 AC607614
	One or two passengers	Five passengers	Five passengers and heavy loads	Driver and heavy loads
Switch position	0	1	2 or 3	4

NOTE: Each switch position is for reference. In each switch position, when the headlamp beam is too high, turn the switch to one-level higher position.

Operation

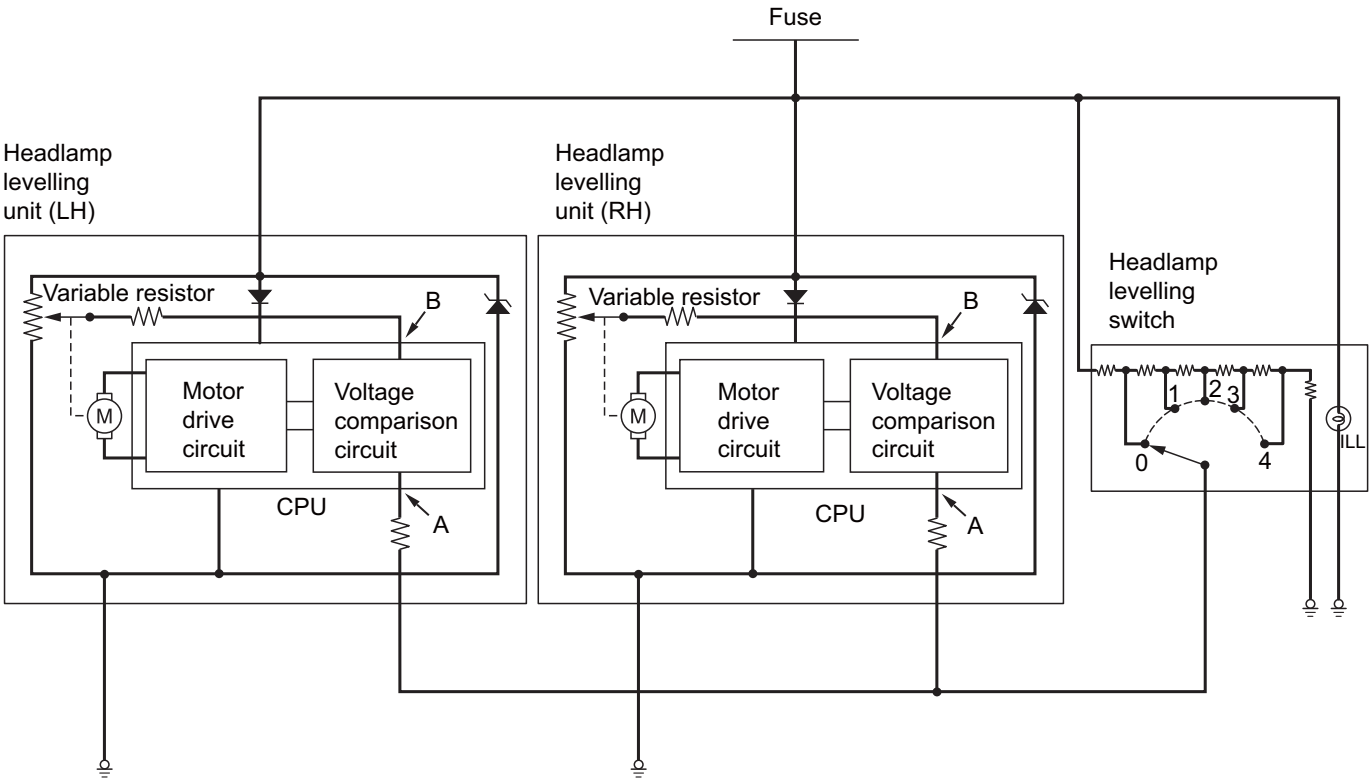

AC314086AB

1. The headlamp levelling switch increases the resistance as it is turned from 0 to 4. Turning the headlamp levelling switch changes the voltage at point A. When the headlamp levelling switch is turned from 0 to 4, the voltage at point A decreases. Upon detection of this voltage change, the headlamp levelling unit turns the motor to lower the beam direction. At this time, the resistance of the variable resistor in the headlamp assembly changes, and the voltage at point B decreases gradually. When the voltages at points A and B become equal, the headlamp levelling unit stops the motor.
2. Turning the headlamp levelling switch from 4 to 0 increases the voltage at point A, and then the headlamp levelling unit turns the motor in the direction opposite to that mentioned in Item 1, increasing the voltage at point B. When the voltages at points A and B become equal, the headlamp levelling unit stops the motor.
3. The headlamp levelling unit detects voltage changes caused by headlamp levelling switch operation, and turns the motor to change the directions of the headlamp reflectors for the adjustment of the headlamp beam direction.

Headlamp automatic levelling system

The beam direction of the headlamps (vertical angle) changes according to the number of passengers and the amount of load. The headlamp automatic levelling system is a system that automatically controls the beam direction of headlamps (up and down angle) when parking or travelling with stable vehicle attitude so that the drivers of oncoming cars and of cars driving in front are not dazzled by the headlamp beam that is directed upwards.

Operational Description

The beam direction of headlamps is automatically controlled according to driving conditions as described in the table below.

Vehicle condition	Control content
When parking	When the engine is stopped with the headlamp (low-beam) ON or when the vehicle is stopped with the headlamp (low-beam) ON and the accelerator pedal is released, the ETACS-ECU controls the beam direction according to the height sensor values of the change in load resulting from getting on/off of passengers or loading/unloading of loads.
When driving at a constant speed	When a vehicle starts on curb, the travelling vehicle posture changes from the posture during parking, so that the beam direction changes. To control the improper beam direction caused by such vehicle attitude change, the ETACS-ECU controls the beam direction while travelling with stable vehicle attitude. This beam direction control while travelling with stable vehicle attitude is performed only once between a vehicle stop and the next stop. When driving is started on a gravel or rough road, the beam direction control is activated after the vehicle attitude becomes stable on a paved road.

System component and function

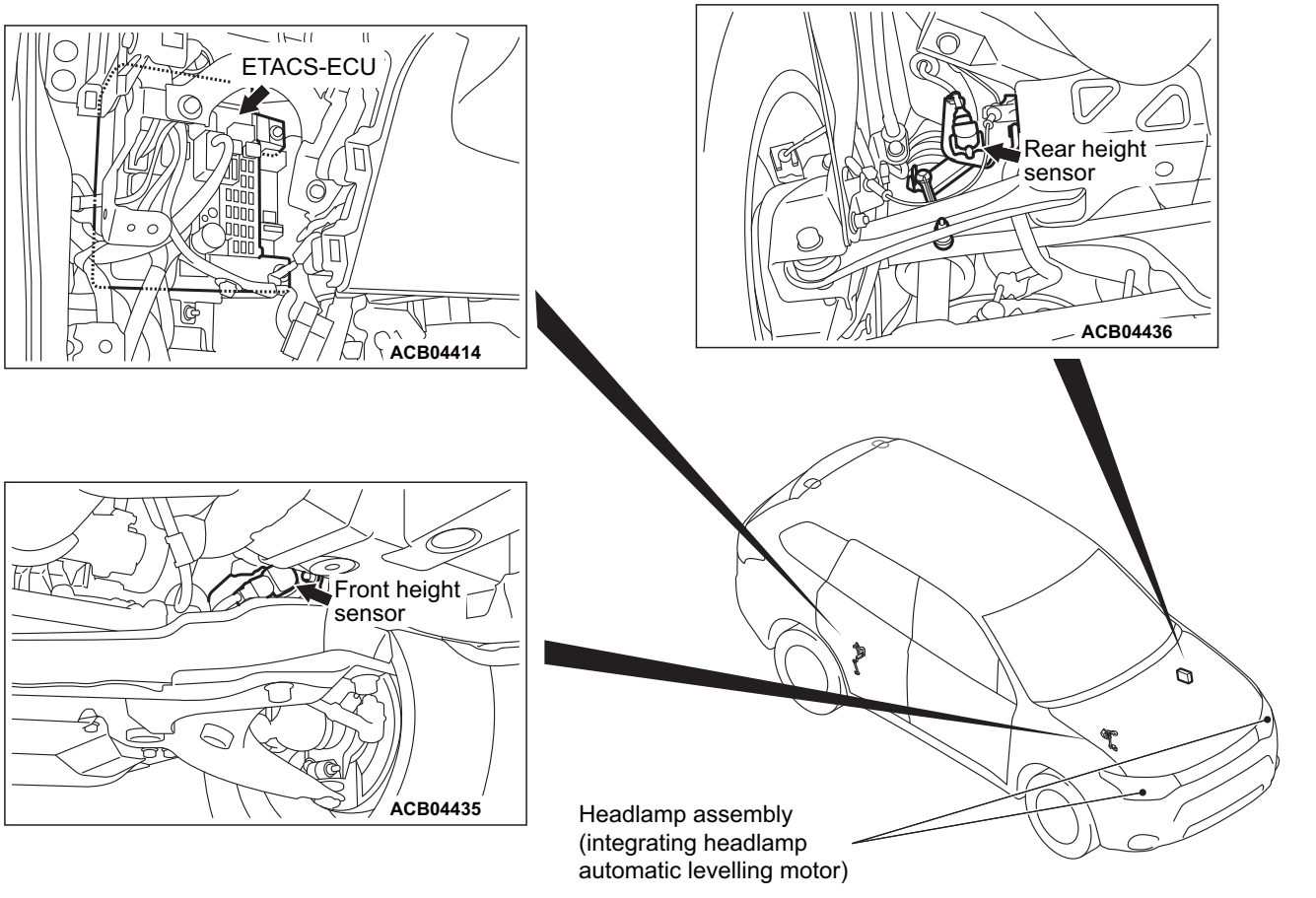

Parts name	Functional description
Ignition switch	Supplies power to the ETACS-ECU when the ignition switch is in the ON position.
Height sensor (front)	Detects the elongation/contraction of the front suspension and transmits the signal to the ETACS-ECU.
Height sensor (rear)	Detects the elongation/contraction of the rear suspension and transmits the signal to the ETACS-ECU.
Headlamp assembly (integrating headlamp automatic levelling motor)	Drives the headlamp reflector by receiving signals from the ETACS-ECU.

Parts name	Functional description
Combination meter	Send an odometer indication value to the ETACS-ECU.
ABS-ECU or ASC-ECU	Transfers the vehicle travel distance information to the ETACS-ECU.
Engine-ECU	Transfers engine speed signals and accelerator pedal position signals to the ETACS-ECU.
ETACS-ECU	• Transfers lighting switch position signals, all door switch ON/OFF signals, tailgate latch switch ON/OFF signals, hazard warning lamp switch ON/OFF signals, headlamp (low-beam) ON/OFF status signals. • Controls the headlamp automatic levelling motor integrated in the headlamp assembly based on the signals form switches and sensors to control the beam direction according to the vehicle posture.
Diagnosis connector	Outputs diagnosis codes.

System block diagram

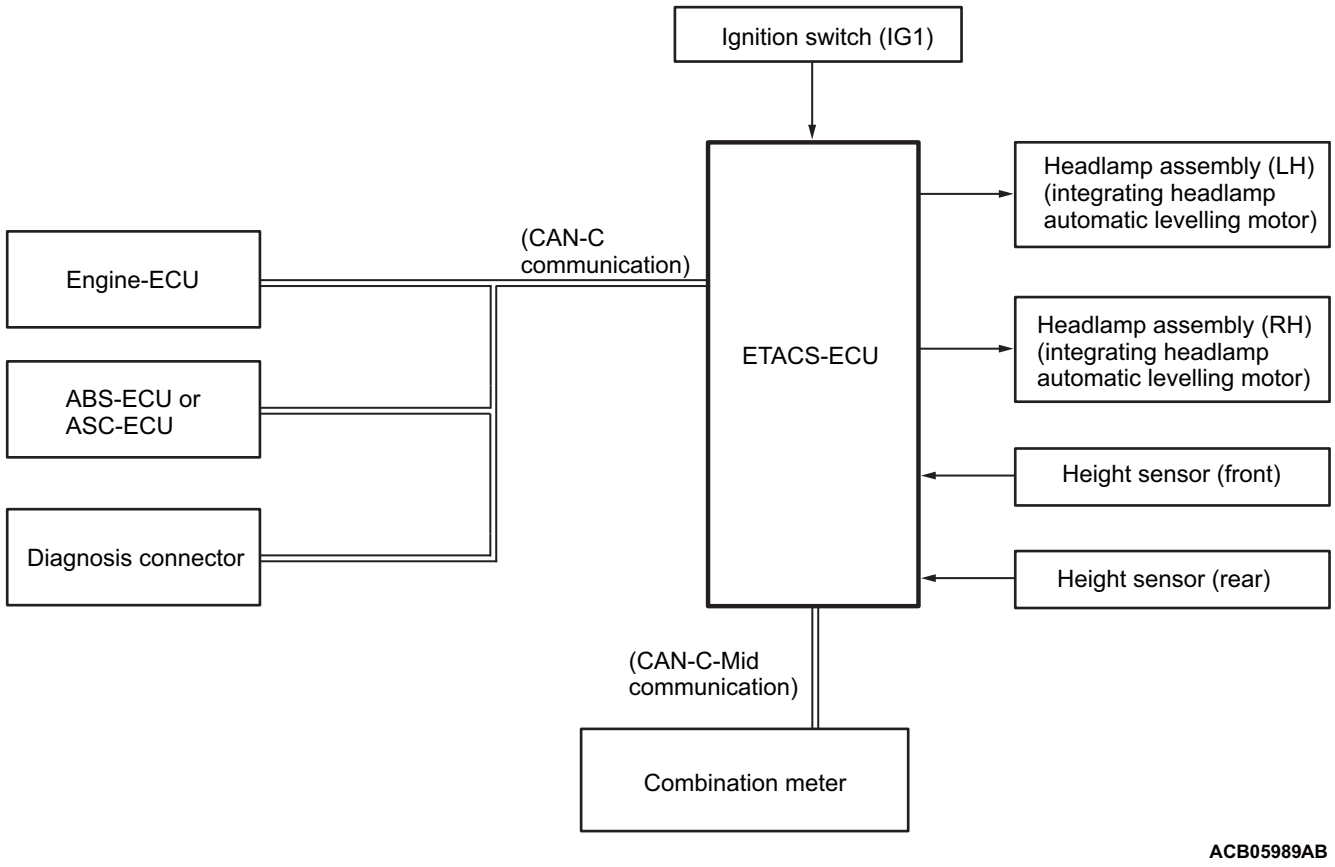

OPERATION CHECK OF HEADLAMP AUTOMATIC LEVELLING

With this inspection, it is simply checked that the headlamp automatic levelling motor incorporated in the headlamp assembly moves in accordance with the vehicle posture.

INSPECTION PROCEDURE

1. Park the vehicle on a level surface.
2. Turn the electric motor switch to "ON" position (Do not start up the plug-in hybrid EV system).
3. At the front or rear jack up point, raise the front wheels or rear wheels off the earth.
4. Turn ON the headlamp switch.
5. When the front wheels are raised, the upward headlamp beam is controlled with the control value applicable to the present vehicle posture, and the headlamp beam moves downward.
6. When the rear wheels are raised, the downward headlamp beam is controlled with the control value applicable to the present vehicle posture, and the headlamp beam moves upward.

4.1.6. Headlamp cleaning device (where mandatory)

M90401060A0008

CONSTRUCTION DIAGRAM

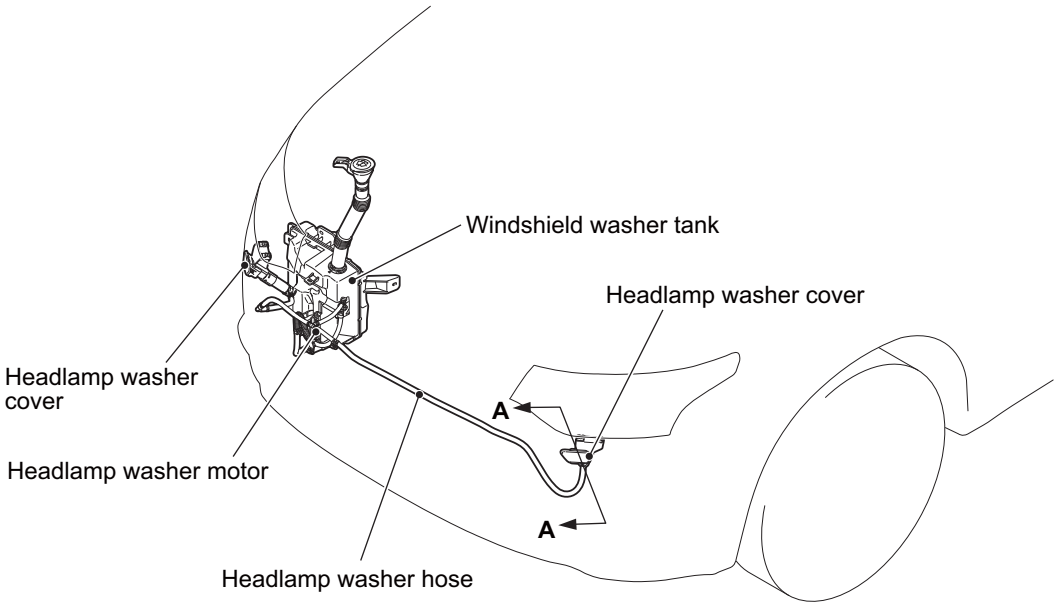

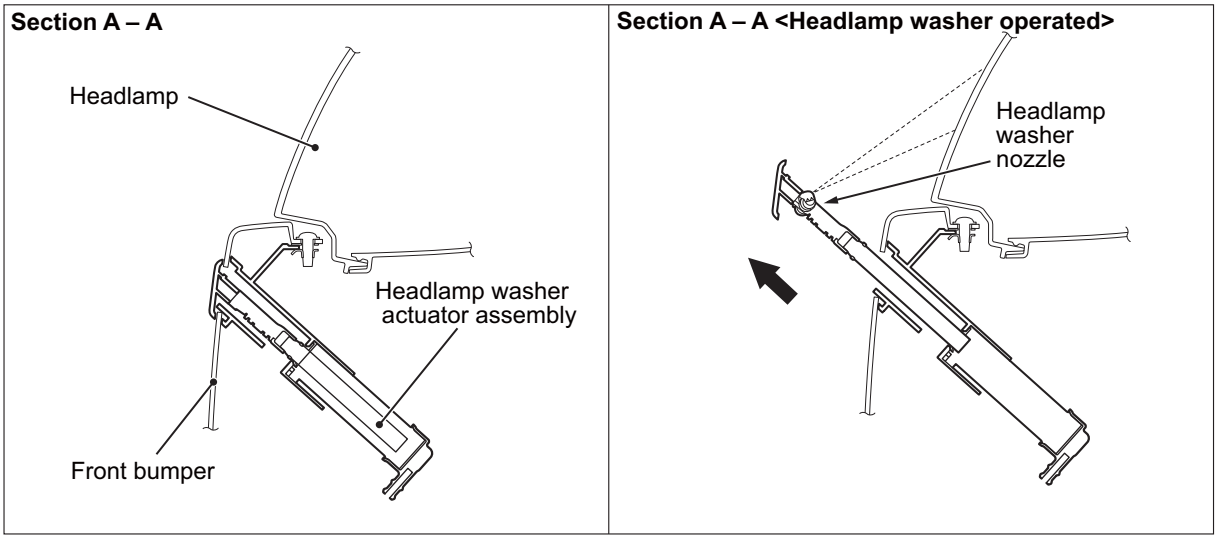

ACC00343AC

- The headlamp washer can be operated with the ignition switch at the ON or ACC position and the headlamp switch at the ON position. Push the headlamp washer button located at the end of the lighting lever once and the washer will be sprayed onto the headlamps.
- A headlamp washer mechanism that thrusts out and retracts nozzles, utilizing the water pressure produced by motors has been adopted as an option. This mechanism contributes to better appearances of vehicles when their washer nozzles are not in use.
- The headlamp washer tank used for this mechanism is also used for the windshield and rear window washers.

4.2. FRONT AND REAR POSITION LAMPS, SIDE MARKER LAMPS, END OUTLINE MARKER LAMPS AND DAYTIME RUNNING LAMPS

4.2.1. Condition and operation

M90402010A0008

Refer to 4.1.1. Condition and operation P.4-3.

4.2.2. Switching

M90402020A0008

"Not Applicable"

4.2.3. Compliance with requirements1.

M90402030A0008

"Not Applicable"

4.3. STOP LAMPS

4.3.1. Condition and operation

M90403010A0008

"Not Applicable"

4.3.2. Switching

M90403020A0008

BRAKE PEDAL CHECK

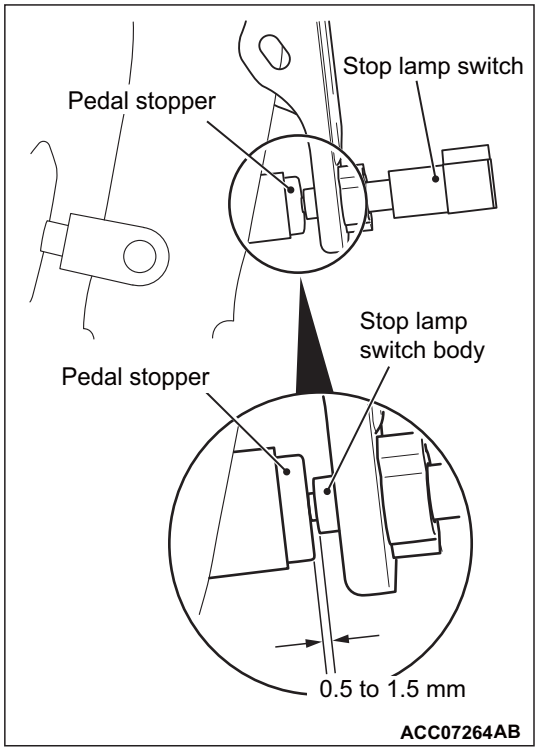

Check that the clearance between the stop lamp switch and the pedal stopper is as shown in the figure.

⚠ CAUTION

Make sure that the stop lamp is not illuminated when the brake pedal is not depressed.

STOP LAMP SWITCH CHECK

⚠ CAUTION

Do not apply lubricant (grease or silicon system sprayer etc.) to the switch and the switch installation section to avoid malfunction of the switch. In addition, do not use gloves which have lubricant (grease or silicon system sprayer etc.) on them.

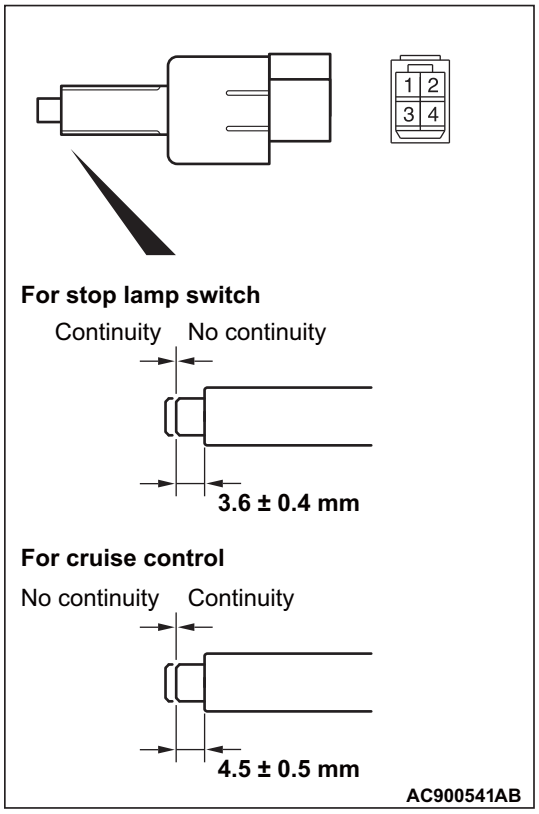

Check for continuity between the terminals of the switch.

Check condition	Terminal connector of tester	Normal condition
At free position	1 - 2 (for stop lamp switch)	Continuity exists (2 Ω or less)
	3 - 4 (for cruise control)	No continuity
Press the plunger from the edge of the outer case by the dimension shown in the figure.	1 - 2 (for stop lamp switch)	No continuity
	3 - 4 (for cruise control)	Continuity exists (2 Ω or less)

FORWARD COLLISION MITIGATION (FCM)

CONSTRUCTION DIAGRAM

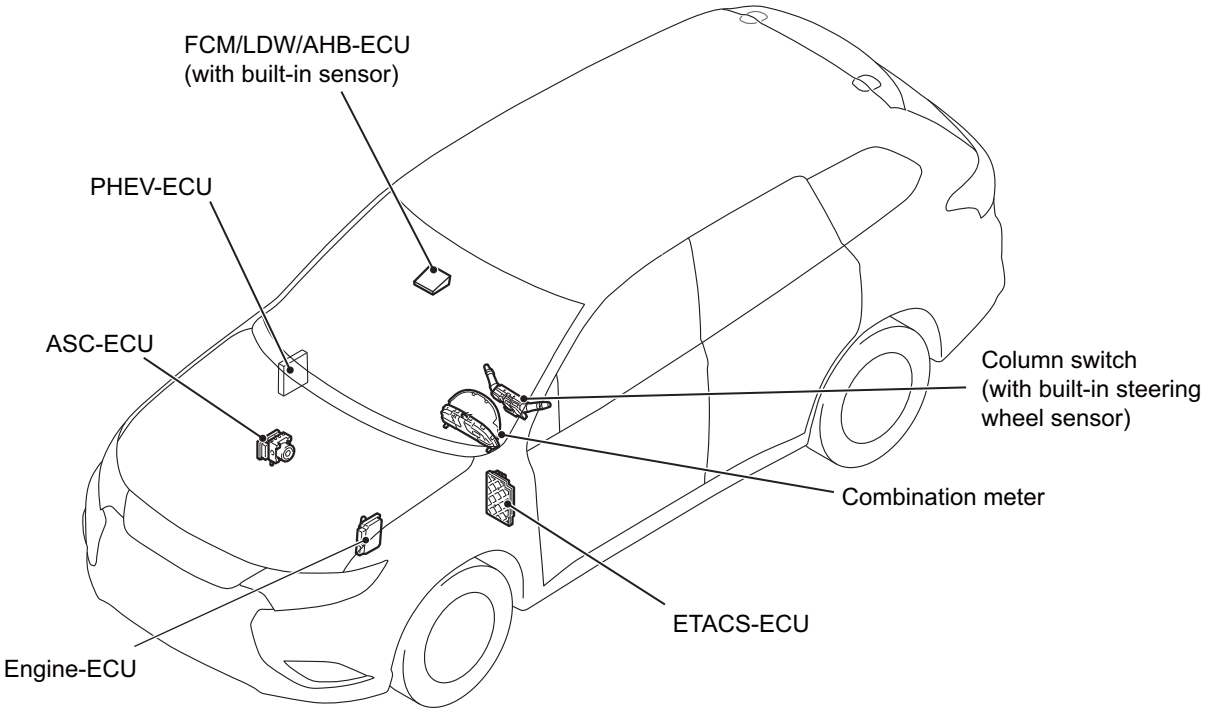

ACG01818AB

Main components and functions

Component name	Functional Description
FCM/LDW/AHB-ECU (with built-in sensor)	• Uses a built-in sensor to recognise a vehicle travelling ahead, a pedestrian, a lane and the headlamp beams which a travelling-ahead or oncoming vehicle casts. • Controls the Forward Collision Mitigation (FCM), the Lane Departure Warning System (LDW) and the automatic high beam system according to the sensor detection and CAN bus communication. • It requests the combination meter to provide status information on the functions and visual warnings via CAN communication. It also requests the ASC-ECU to control the brakes via CAN communication. • Adjusts the axis of the built-in sensor, and detects any blockage or malfunction.
ASC-ECU	• Controls the brakes according to request signals received from the FCM/LDW/AHB-ECU via CAN communication. • Activates the stop lamps when the automatic braking is triggered. • Requests the engine-ECU to provide "engine braking" effect according to the request from the FCM/LDW/AHB-ECU. • Sends the signals of the FCM and Ultrasonic misacceleration Mitigation System ON/OFF switch to the ECUs via CAN communication.
PHEV-ECU	• Sends accelerator pedal position sensor signals to the ECUs via CAN communication. • Controls the engine torque according to request signals received from the ASC-ECU. • Informs the ECUs of the selector lever position via CAN communication.

Component name	Functional Description
Combination meter	The FCM/LDW/AHB-ECU informs the combination meter of status information and requests it to provide visual warnings. Based on these, the combination meter controls the multi-information display, the indicator lamps, the warning lamps and the buzzer.
ETACS-ECU	• Incorporates the circuit where the ASC-ECU activates the stop lamps when the FCM activates the automatic braking. • Sends LDW switch signals to the ECUs via CAN communication. • Switches high and low beam headlamps according to request signals received from the FCM/LDW/AHB-ECU. • Informs the ECUs of ambient temperature via CAN communication. • Sends stop lamp switch signals to the ECUs via CAN communication.
Column switch (with built-in steering wheel sensor)	Informs the ECUs of a steering wheel angle and angular velocity via CAN communication.

SCHEMATIC DIAGRAM

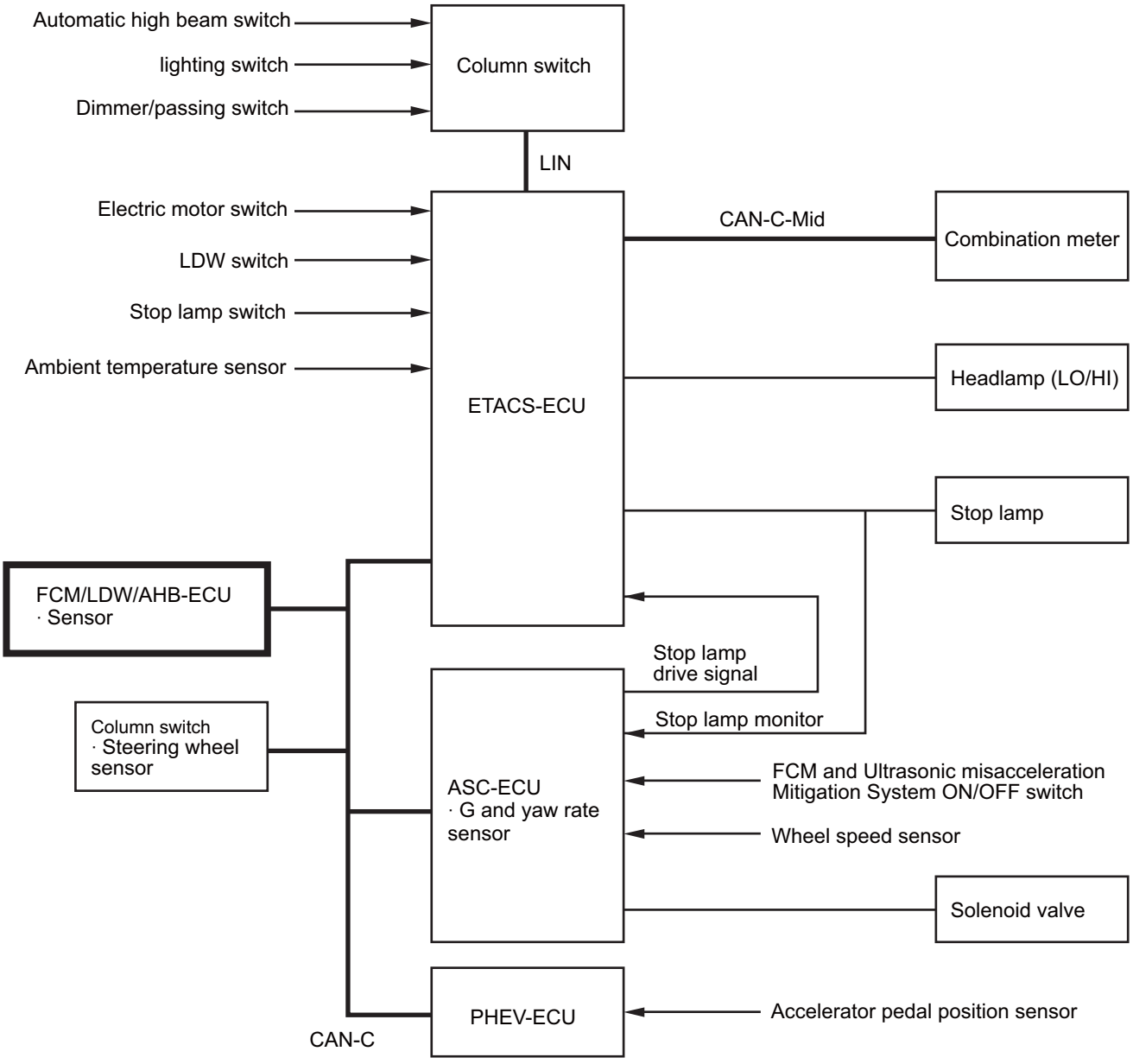

ACG01820AB

Fail-safe and self-diagnosis functions

The FCM/LDW/AHB-ECU constantly monitors the input and output signals. If the system detects a malfunction, it will send a failure signal to the combination meter and prohibit the FCM/LDW/automatic high beam system control under circumstances. The combination meter will provide a visual and audible warning to inform the driver of it. The FCM/LDW/AHB-ECU has the following functions for easier system checks.

- Diagnosis code set
- Service data output
- Freeze frame data output

All the above items can be diagnosed using M.U.T.-III.

Sensor calibration

If the FCM/LDW/AHB-ECU is replaced or removed and installed, calibration the sensor by using the M.U.T.-III.

NOTE: For how to calibration the sensor, refer to the WORKSHOP MANUAL.

FORWARD COLLISION MITIGATION (FCM)

Function

The FCM has the following functions:

Function	General
Forward collision warning function	Activate the visible warning on the combination meter and audible warning when the system determines that a forward collision is imminent.
Forward collision mitigation brake system prefill	Increases the brake fluid pressure in advance to enhance the response during the driver's braking operation when the system determines that a forward collision is imminent.
Forward collision mitigation brake assist	Advances the brake assist timing when the system determines that a forward collision is imminent.
Forward collision mitigation brake	Activates the automatic emergency braking to reduce the vehicle speed when the system determines that a forward collision is not avoidable.
Forward collision mitigation brake for low speed driving	Activates the automatic emergency braking to reduce the vehicle speed when the system determines that a forward collision is imminent when the vehicle is being driven at 30 km/h or less. Stops the vehicle to avoid the collision under certain circumstances.

Operation

The system calculates the distance and the relative velocity between the vehicle travelling ahead and your vehicle by using a sensor. If the system determines that a straightforward collision is imminent, it will avoid or reduce the injury or damage due to the collision by performing the controls shown in the table below:

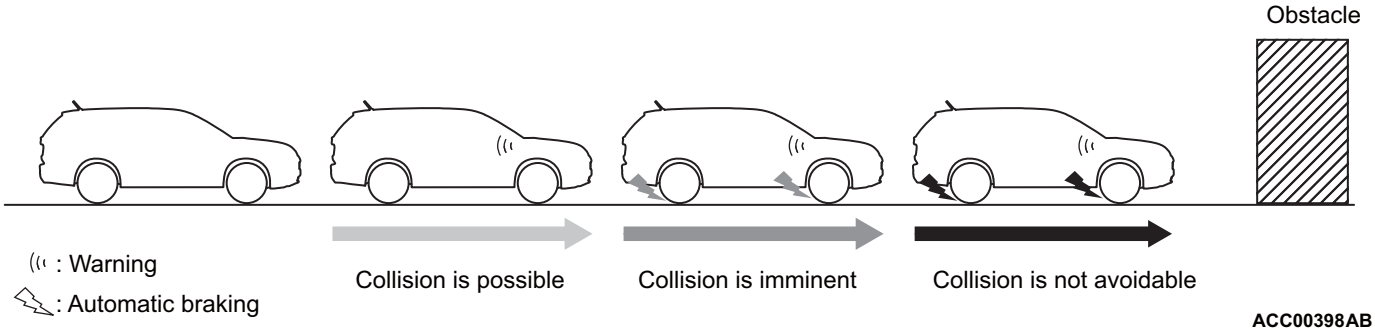

Control		Collision is possible	Collision is imminent	Collision is not avoidable
Forward collision warning function	Warning indicator	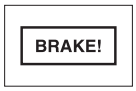 ACC00401	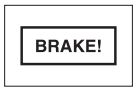 ACC00401	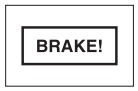 ACC00401
	Buzzer	Sounds	Sounds	Sounds
Forward collision mitigation brake system prefill		Increase the brake fluid pressure.	-	-
Forward collision mitigation brake assist		Assists the braking force in accordance with the driver's brake operation.	Assists the braking force in accordance with the driver's brake operation.	Assists the braking force in accordance with the driver's brake operation.
Forward collision mitigation brake*		-	Weak automatic-braking	Strong automatic-braking

NOTE: *: If two seconds elapse after the forward collision mitigation brake stops the vehicle, it can be deactivated automatically.

FCM AND ULTRASONIC MISACCELERATION MITIGATION SYSTEM ON/OFF SWITCH

Forward collision mitigation system (FCM) and ultrasonic misacceleration mitigation system ON/OFF switch

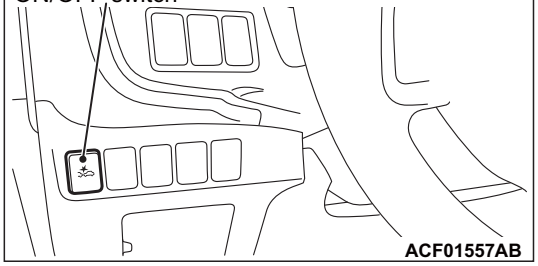

The FCM and Ultrasonic misacceleration Mitigation System ON/OFF switch is installed at the instrument panel left lower side. You can switch the FCM (on and off) and the warning timing ("FAR", "Mid" and "NEAR") by operating this switch.

How to switch on and off the FCM

- The FCM is toggled between on and off when the FCM and Ultrasonic misacceleration Mitigation System ON/OFF switch is pressed for 1.5 seconds or more. When the FCM is toggled, the system will inform the driver of it by the combination meter LCD display*.

  NOTE: *: If the FCM is toggled off, "FCM OFF display" will be shown on the combination meter LCD screen. If the FCM is toggled on, a current warning timing will be shown on the combination meter LCD screen.

How to switch the FCM warning timing

- The FCM warning timing is toggled when the FCM ON/OFF switch is pressed for less than 1.5 seconds with the FCM activated. When the FCM is toggled, the system will inform the driver of it by the combination meter LCD display.

AUTOMATIC HIGH BEAM SYSTEM

⚠ CAUTION

The automatic high beam system may not work correctly under certain external factors.

External factors	Detail
Weather	Too bad weather such as fog, snow, heavy rain
Windshield glass	• Dirt, condensation, icing on the windshield • Cracks or breakage around the FCM/LDW/AHB sensor detection portion
Preceding vehicle or oncoming vehicle	• No exterior lamps of a preceding vehicle or oncoming vehicle is turned on • Only right or left exterior lamps are turned on, or the vehicle is a motorbike. • There is any light source, which is similar to vehicle exterior lamps • A preceding vehicle is equipped with a reflection plate

External factors	Detail
Road conditions	• On too steep gradients • The vehicle is driven on a winding road or around a tight bend • Driving on poor surface such as cobbled • There is too bright a luminous body in front of the vehicle (e.g. reflective traffic sign, an electric noticeboard, a delineator).
Vehicle condition	The vehicle is inclined due to overload, flat tyre, or towing, etc.
System	• The temperature in the FCM/LDW/AHB is 100°C or more, or -40 °C or less. • The system can detect no illumination or light source as the camera in the FCM/LDW/AHB is hindered by an object.

Operation

When the FCM/LDW/AHB-ECU (integrated sensor) and the front lamp sensor sense a light source (illuminant) ahead of the vehicle, the system controls the low beam and high beam automatically to suit each driving situation.

When an oncoming vehicle is approaching

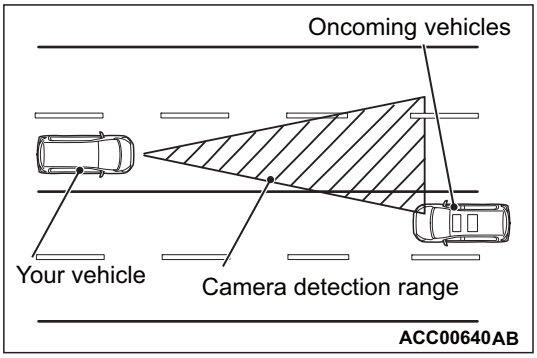

- The system turns on the low-beam when it detects that an oncoming vehicle is approaching.
- The system switches from the low-beam into the high-beam when the oncoming vehicle is out of the detection range of the sensor, which is integrated in the FCM/LDW/AHB-ECU, for a certain period.

NOTE: The detection range of the sensor, which is integrated in the FCM/LDW/AHB-ECU, depends on its environment.

When you overtake a preceding vehicle or the system misses it.

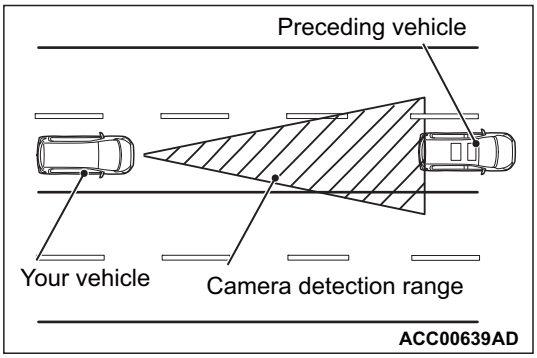

- The system turns on the low-beam when it detects that a preceding vehicle is approaching.
- The system switches from the low-beam into the high-beam when the preceding vehicle is out of the detection range of the sensor, which is integrated in the FCM/LDW/AHB-ECU, for a certain period.

NOTE: The detection range of the sensor, which is integrated in the FCM/LDW/AHB-ECU, depends on its environment.

Operation conditions for the automatic high beam system

If the condition below is satisfied, the automatic high beam system will be activated.

- Always observe the following procedures from step 1.

1. Turn off the power supply mode of the electric motor switch.
2. Turn on the power supply mode of the electric motor switch.
3. Turn on the low-beam headlamps. (Set the lighting switch to "AUTO" or "HEAD" position.)
4. Turn on the automatic high beam switch.

Switching conditions between headlamp low-beam and high-beam

The system switches the headlamp beams as below:

Switching from low-beam to high-beam

If all of the conditions below are satisfied, the system will switch the headlamps from the low-beam to high-beam.

- The vehicle speed is 40 km/h or more.
- It is dark in front of or around the vehicle. (Darkness, under which the automatic lighting system turns on the headlamps)
- When there are no preceding vehicle or oncoming vehicles
- When there are a few street lamps (Including few tunnel lamps)

Switching from high-beam to low-beam

The system switches the headlamp beams if any of the conditions below is satisfied.

- The vehicle speed is less than 30 km/h.
- It is bright in front of or around the vehicle.
- When the tail lamps of a preceding vehicle or the headlamps of an oncoming vehicle are turned on
- When there are many street lamps (Including many tunnel lamps)

LANE DEPARTURE WARNING SYSTEM (LDW)

Operation

The LDW operates in the three stages below:

NOTE: The indicator and warning depend on these stages. If predetermined warning conditions are satisfied, the buzzer will sound.

1. Operation status (LDW: ON)
2. Warning monitor status (standby)
3. Warning (WARNING L-LANE or WARNING R-LANE)

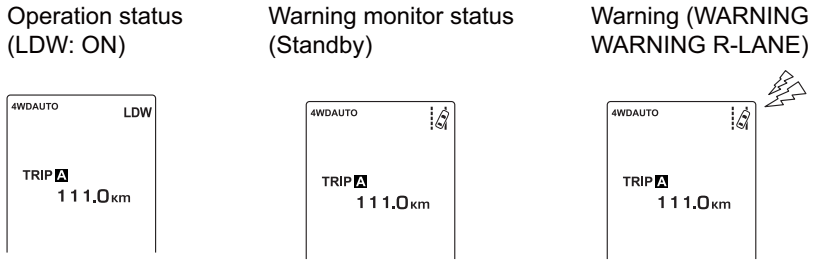

ACG01445AB

1. Operation status (LDW: ON)

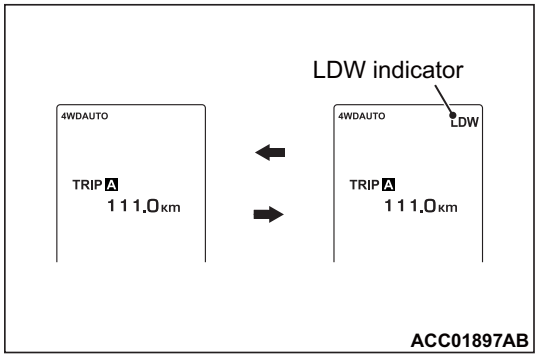

ACC01897AB

If all of the conditions below are satisfied, the LDW switch will be active. When the switch is operated with it active, the operation status will be switched between "OFF" (LDW disabled) and "ON" (LDW enabled). (LDW operation status switching function)

1. Turn off the power supply mode of the electric motor switch.
2. Turn on the power supply mode of the electric motor switch.
3. The LDW is not defective

2. Warning monitor status (Standby)

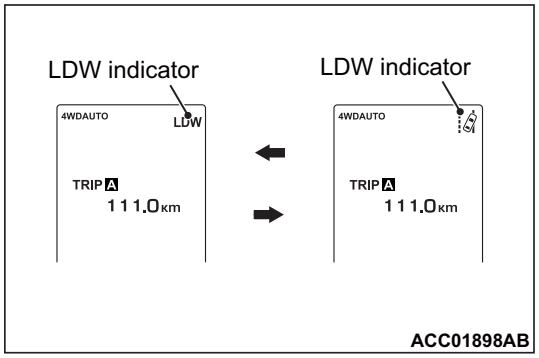

If all of the conditions below are satisfied, the LDW will enter the warning monitor status (standby mode).

1. The operation status is "ON."
2. The LDW is not defective
3. Vehicle speed is 65 km/h or more
4. Seven seconds or more have elapsed since the side turn-signal lamp (LH or RH) was turned "OFF".
5. The LDW camera has recognised a lane successfully or three seconds.

   NOTE: If lane division lines are dotted-lines, the system also recognises them one continuous line.
6. Your vehicle is being driven on a road which radius exceeds 125 m.

3. Warning (WARNING L-LANE or WARNING R-LANE)

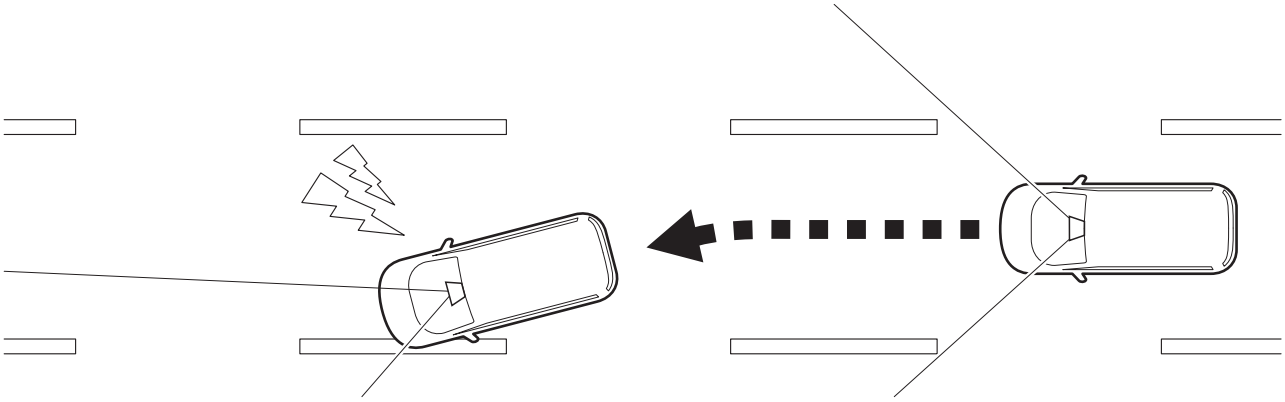

ACC01083AB

If your vehicle intrudes a warning range, the LDW will provide visual and audible warnings. The warning will be activated for 3 seconds in maximum. Even if the vehicle exits from the range soon, the warning will continue for at least 1 seconds.

Variable warning range

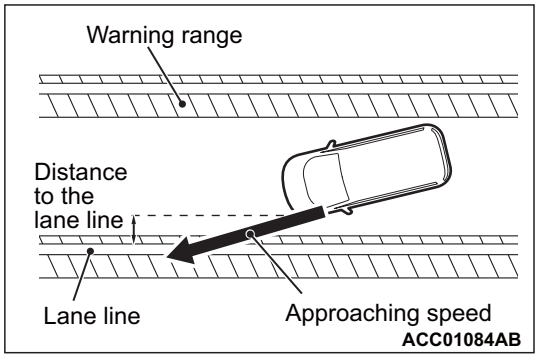

The warning range depends on your vehicle's approaching speed to the lane line, or the distance between your vehicle and the lane line as shown.

Deactivating the warning

If your vehicle exits from the warning range or the predetermined warning time elapses, the system will deactivate the warning and return to the standby mode.

Disabling the warning

If a lane width is approximately 2.5 m or less or a lane is closed due to construction work, the system will disable the warning to prevent false operation.

Resuming the warning

The LDW stores the range where the repeated warning is inhibited. If a warning is activated once, that range will become active. When your vehicle exits from that range, the warning will be permitted again.

4.3.3. Compliance with requirements1.

M90403030A0008

"Not Applicable"

4.4. DIRECTION INDICATOR AND HAZARD WARNING LAMPS

4.4.1. Condition and operation

M90404010A0008

"Not Applicable"

4.4.2. Switching

M90404020A0008

"Not Applicable"

4.4.3. Compliance with requirements1.

M90404030A0008

"Not Applicable"

4.4.4. Flashing frequency

M90404040A0008

"Not Applicable"

4.5. FRONT AND REAR FOG LAMPS

4.5.1. Condition and operation

M90405010A0008

"Not Applicable"

4.5.2. Alignment (X)2

M90405020A0008

"Not Applicable"

4.5.3. Switching

M90405030A0008

"Not Applicable"

4.5.4. Compliance with requirements1.

M90405040A0008

"Not Applicable"

4.6. REVERSING LAMPS

4.6.1. Condition and operation

M90406010A0008

"Not Applicable"

4.6.2. Compliance with requirements1.

M90406020A0008

"Not Applicable"

4.6.3. Switching

M90406030A0008

"Not Applicable"

4.7. REAR REGISTRATION PLATE LAMP

4.7.1. Condition and operation

M90407010A0008

"Not Applicable"

4.7.2. Compliance with requirements1.

M90407020A0008

"Not Applicable"

4.8. RETRO-REFLECTORS, CONSPICUITY (RETRO REFLECTING) MARKINGS AND REAR MARKING PLATES

4.8.1. Condition

M90408010A0008

"Not Applicable"

4.8.2. Compliance with requirements1.

M90408020A0008

"Not Applicable"

4.9. TELL-TALES MANDATORY FOR LIGHTING EQUIPMENT

4.9.1. Condition and operation

M90409010A0008

"Not Applicable"

4.9.2. Compliance with requirements1.

M90409020A0008

"Not Applicable"

4.10. ELECTRICAL CONNECTIONS BETWEEN TOWING VEHICLE AND TRAILER OR SEMI-TRAILER

M90410000A0008

"Not Applicable"

4.11. ELECTRICAL WIRING

M90411000A0009

“Query raised for this content”

4.12. NON OBLIGATORY LAMPS AND RETRO-REFLECTORS (X)2

M90412000A0008

Refer to 4.1.1. Condition and operation P.4-3.

4.13. BATTERY(IES)

M90413000A0008

DRIVE BATTERY

<Module where 8 battery cells are connected in series>

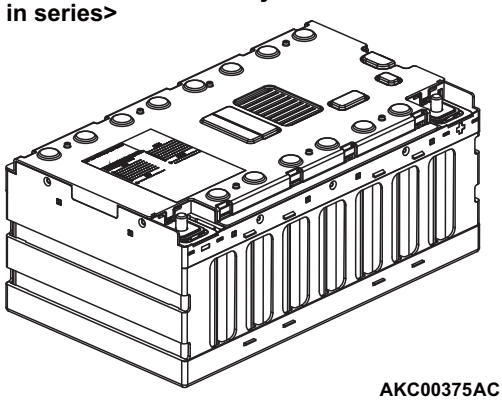

AKC00375AC

The drive battery consists of lithium ion battery that is small and lightweight and also has a high energy density. The motor (electric motor unit) and the air conditioner system are powered by the drive battery. The drive battery is housed in the metal case that has high water-resistant properties, vibration-resistant properties, dust-resistant properties and high heat-resistant properties. The case is placed under the floor. 8-cell modules in which 10 battery cells are in series. 10 of 8-cell modules are used. In total, the 80 battery cells are connected in series, which produces the total voltage as 300 V.

CHARACTERISTICS OF DRIVE BATTERY AND PRECAUTIONS IN USE

<Characteristics>

- The drive battery, which is based on lithium ion battery, can be charged before the stored energy is used up.
- The drive battery performance gradually decreases due to the duration of use or due to the use conditions.
- The drive battery performance can be varied with ambient temperature. Especially in the lower temperature, the cruising range may become shorter and the required time for charging may also become longer.
- When the vehicle is stored at the extremely high temperature or extremely low temperature, the battery performance can decrease.
- Even if the vehicle is not in use, the drive battery may be gradually discharged and the energy stored in the drive battery will be reduced.

<Precautions in use>

- If the vehicle is not used for a long time, check the drive battery meter reading every three months. If the reading is zero, charge the battery until the reading is shown. Or put the electric motor switch in the READY to automatically start the engine. Wait until the engine stops. Then, turn off the electric motor switch .
- The drive battery is retrieved. When the vehicle is discarded, always contact Mitsubishi Motors Dealer.

PRECAUTIONS ON HOW TO USE THE HIGH-VOLTAGE VEHICLE

This vehicle has a high-voltage (300 V) circuit. If the vehicle is handled incorrectly, electric leakage or shock may result. Also, the service technicians/engineers who perform inspection and service related to the high-voltage circuit of the electric vehicles are obligated to observe national legal requirements.

INSPECTION/TEST OF PROTECTIVE EQUIPMENT, BLOTTER STORAGE

Check and store the protective equipment in accordance with national legal requirements.

PROTECTIVE EQUIPMENT (REFERENCE ONLY)

⚠ CAUTION

Use protective equipment which complies with national legal requirements.

Protective equipment	Number	Name	Use
 B992640 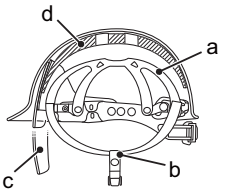 AC903299AB	MB992640 a. MB992641 b. MB992642 c. MB992643 d. MB992644	Electric insulation helmet (with shield) a. Helmet suspension b. Chin strap c. Visor d. Liner	• When you may contact with the exposed live wirings while handling the damaged vehicle • Alternatively, when you prevent the electric shock according to need
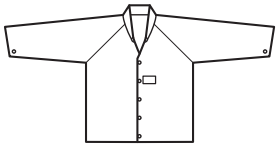 B992645	MB992645	Electric insulation jacket	• When you may contact with the exposed live wirings while handling the damaged vehicle • Alternatively, when you prevent the electric shock according to need

Protective equipment	Number	Name	Use
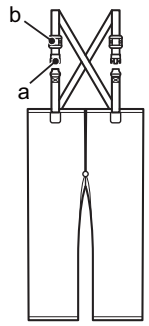 B992646	MB992646 a. MB992669 b. MB992670	Electric insulation trousers a. Electric insulation trousers buckle b. Electric insulation trousers adjuster	• When you may contact with the exposed live wirings while handling the damaged vehicle • Alternatively, when you prevent the electric shock according to need
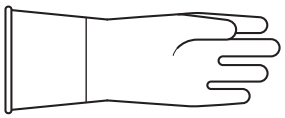 B992647	a. MB992647 b. MB992648 c. MB992649 d. MB992650	a. Electric insulation glove (LL) b. Electric insulation glove (L) c. Electric insulation glove (M) d. Electric insulation glove (S)	• Service plug removal and installation • Work on live wirings when there is a problem • When you may contact with the exposed live wirings while handling the damaged vehicle • Alternatively, when you prevent the electric shock according to need
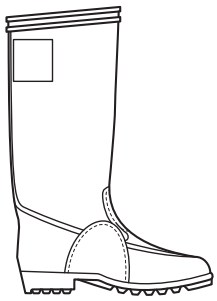 B992651	a. MB992651 b. MB992652 c. MB992653 d. MB992654 e. MB992655 f. MB992656 g. MB992657 h. MB992658	a. Electric insulation boots (24.0) b. Electric insulation boots (24.5) c. Electric insulation boots (25.0) d. Electric insulation boots (25.5) e. Electric insulation boots (26.0) f. Electric insulation boots (26.5) g. Electric insulation boots (27.0) h. Electric insulation boots (28.0)	• When you may contact with the exposed live wirings while handling the damaged vehicle • Alternatively, when you prevent the electric shock according to need

TESTER AND SPECIAL TOOL

Be sure to use the tester and special tools specified in this manual.

HIGH-VOLTAGE COMPONENTS

The high-voltage components are described below. Also, wiring harness and connectors of high-voltage circuit are unified with a colour of orange.

- Drive battery assembly
- Power Drive Unit (incorporating GCU [Generator Control Unit])
- Rear electric motor control unit (REMCU)
- Front motor assembly
- Rear motor/rear transaxle assembly
- Generator
- On-board charger/DC-DC converter
- Electric heater <Vehicles with electric heater>
- Main battery cable
- EV charging cable (Normal charger)
- EV charging cable (Quick charger)
- Service plug
- Wiring harness and connector

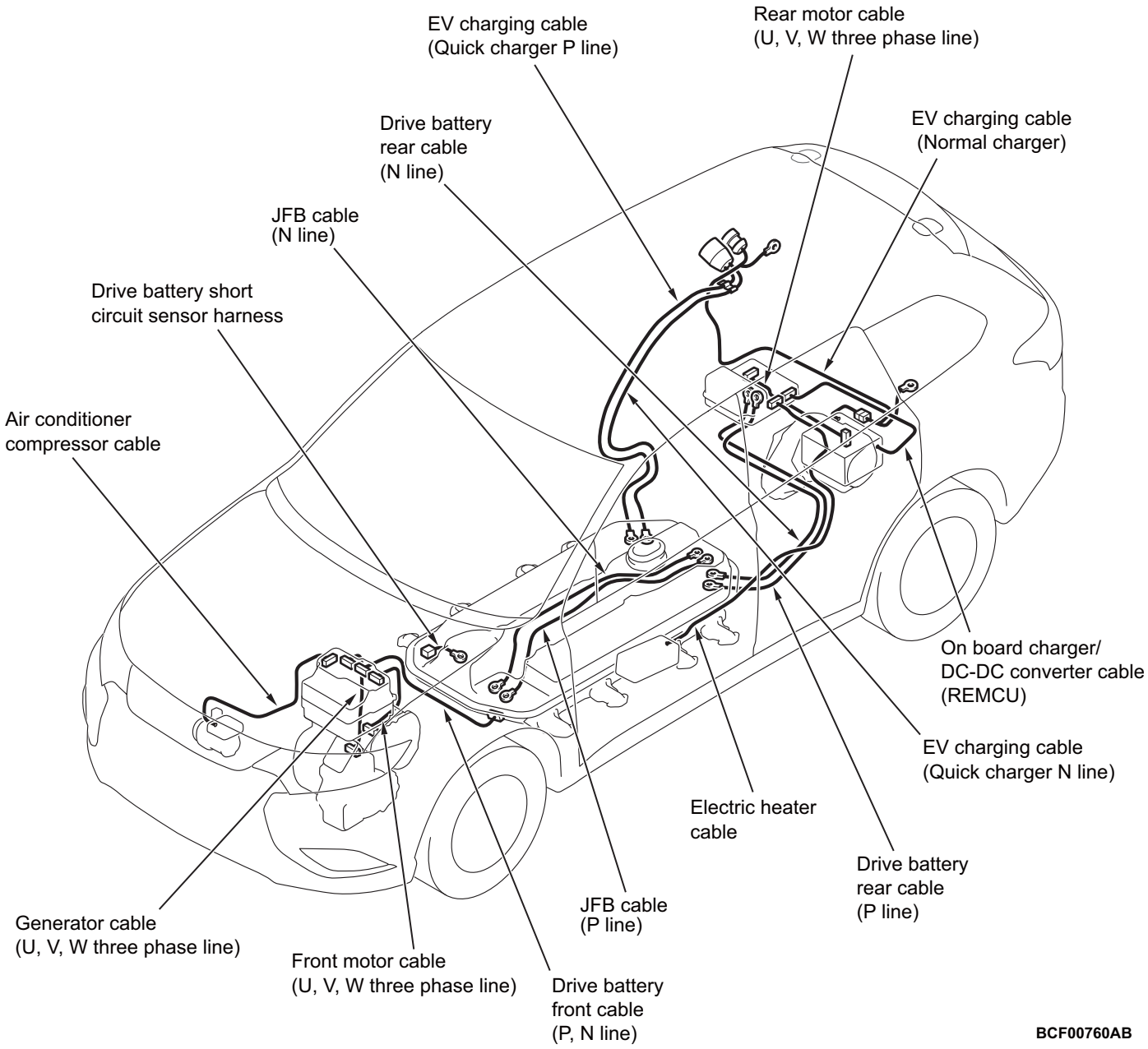

SERVICE PRECAUTIONS

⚠ ***DANGER***

When adjusting the high-voltage components, be sure to disconnect the service plug in order to shut off the high voltage. If the high voltage cannot be shut off after the following work, or if the high-voltage shut-off work is difficult because of the accidental damages.

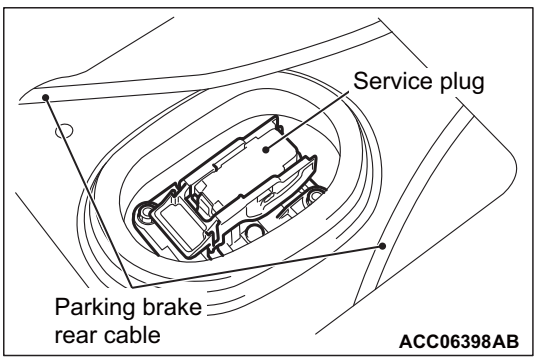

Remove the service plug under the rear centre seat according to the following procedure, which shuts off the high voltage to the high-voltage system. Also, when installing the service plug and the service lid.

Service plug and service lid removal steps

Prepare the service plug removal steps check sheet.

1. Turn off the power supply mode of the electric motor switch.

⚠ WARNING

- ***To avoid causing any trouble to the electric motor unit components, do not disconnect the auxiliary battery negative terminal for two minutes after turning off the power supply mode of the electric motor switch.***
- ***The voltage of the smoothing condenser in the inverter must be decreased thoroughly. Therefore, do not remove the service plug for 5 minutes after the negative terminal of the auxiliary battery is disconnected.***

2. Disconnect the negative terminal of the auxiliary battery.

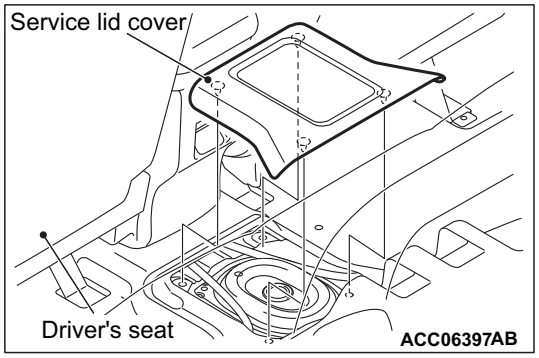

3. Remove the service lid cover.

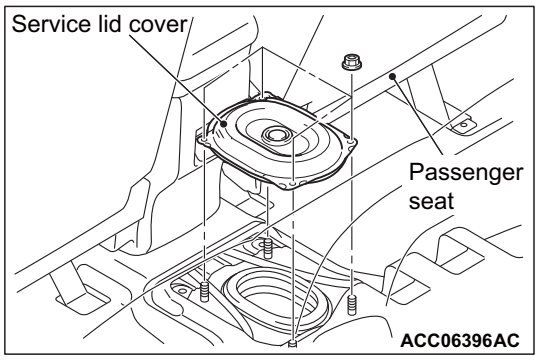

4. Remove the service lid mounting nut, and then remove the service lid.

⚠ DANGER

- ***Wear the electric insulation gloves when pulling out the service plug.***
- ***Do not lift the lever of service plug by halve. It is dangerous because the current is supplied during the lifting operation. Be sure to remove the service plugs all at once.***

⚠ WARNING

The voltage of the smoothing condenser in the inverter must be decreased thoroughly. Therefore, do not remove the service plug for 5 minutes after the negative terminal of the auxiliary battery is disconnected.

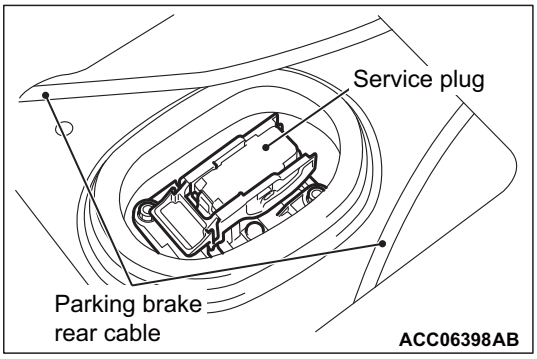

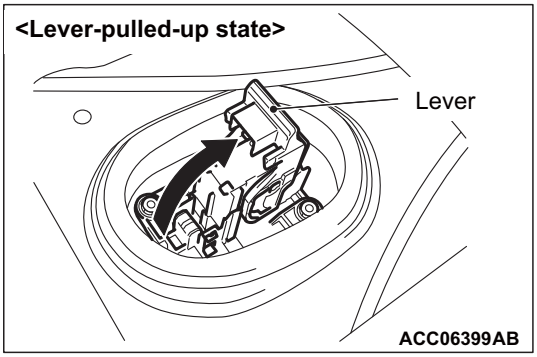

5. Lift the service plug lever.

⚠ DANGER

After removing the service plug, insulate the plug installed part of the drive battery securely.

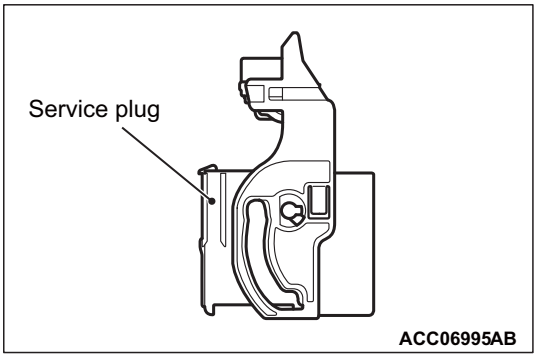

6. Remove the service plug.

⚠ *DANGER*

During inspection, wear the electric insulation gloves. If the high voltage cannot be shut off after the inspection.

7. When removing and installing each high-voltage part, be sure to perform the following inspection beforehand.

When the drive battery is removed and installed

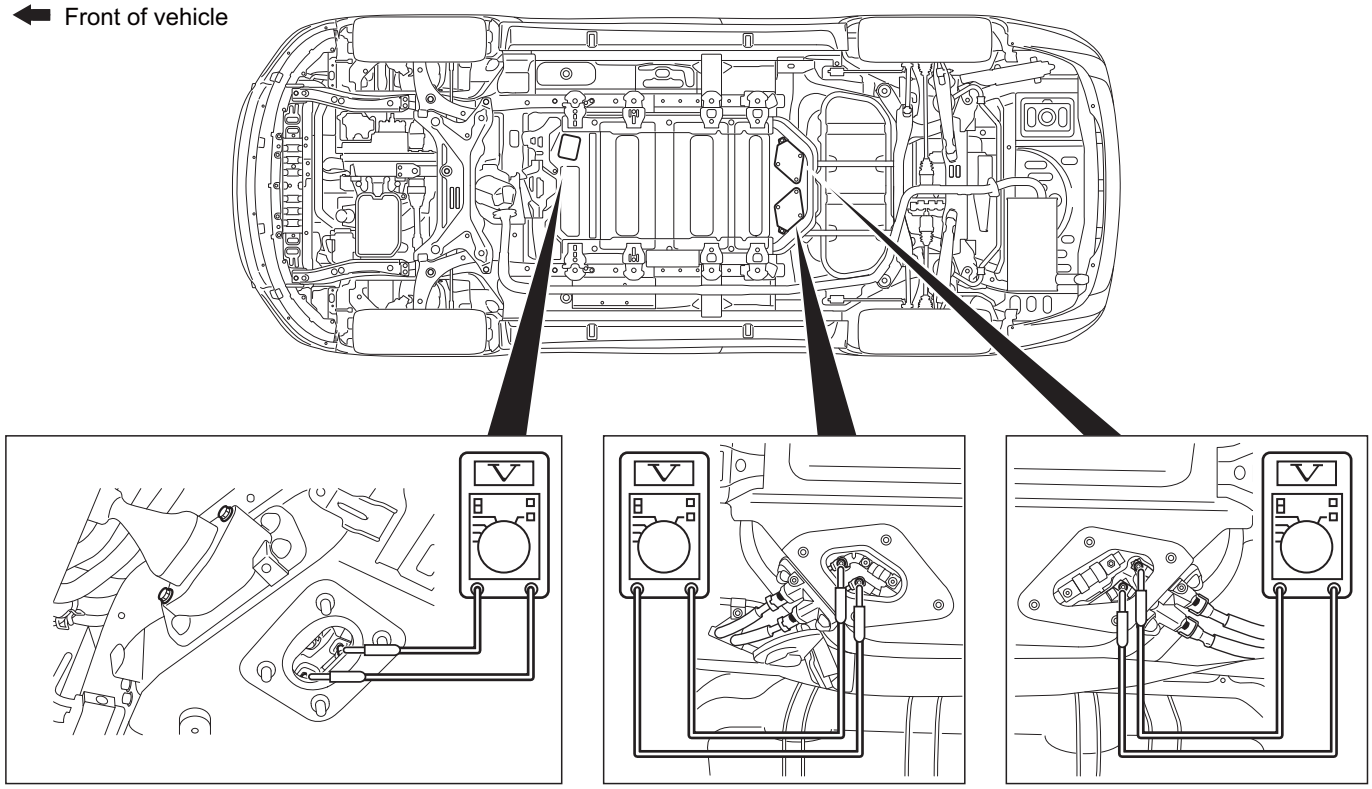

Remove the work-hole lids at the bottom of the drive battery, and carry out the inspection as shown in the figure, using a high-voltage multimeter.

NOTE: For how to remove and install the work-hole lids.

Normal voltage: Approximately 0 V

When the other high-voltage parts are removed and installed

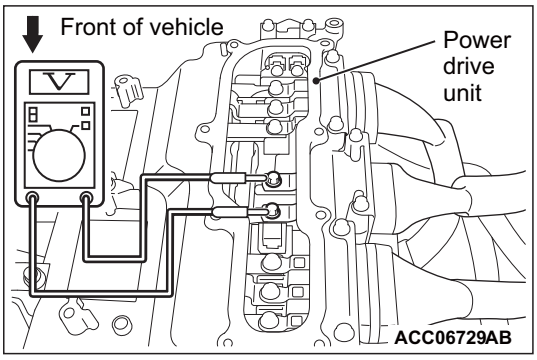

Remove the service lid on the top of the power drive unit in the engine compartment, and carry out the inspection as shown in the figure using a high-voltage multimeter.

NOTE: For how to remove and install the service lid.

Normal voltage: Approximately 0 V

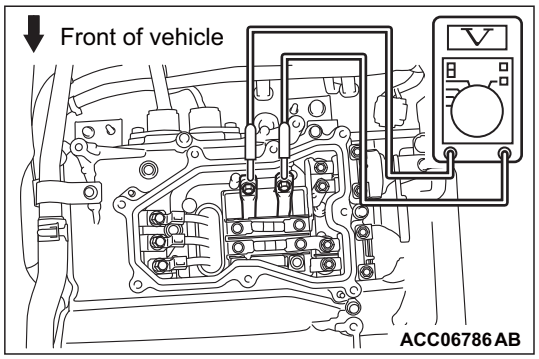

Remove the service lid on the top of the REMCU in the luggage compartment, and carry out the inspection as shown in the figure using a high-voltage multimeter.

NOTE: For how to remove and install the service lid.

Normal voltage: Approximately 0 V

SERVICE PLUG AND SERVICE LID INSTALLATION STEPS

⚠ DANGER

Wear the electric insulation gloves when installing the service plug.

⚠ CAUTION

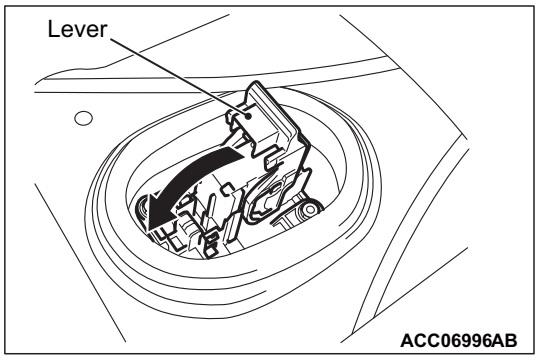

Pull the service plug lever down until it clicks, because the interlock switch does not operate unless the service plug lever is pulled down properly.

1. Install the service plug.

⚠ CAUTION

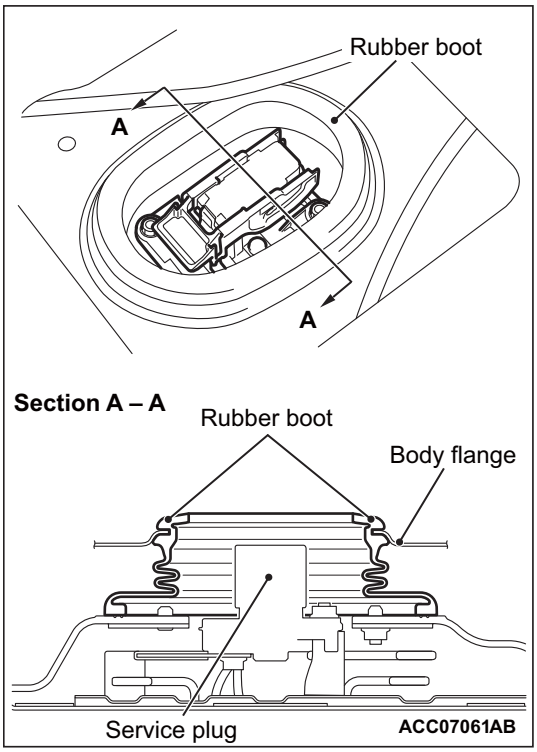

If the rubber boot around the service plug is released, water may enter the inside of the drive battery, resulting in short-circuit. Therefore, check that the rubber boot is engaged with the body flange before installing the service lid.

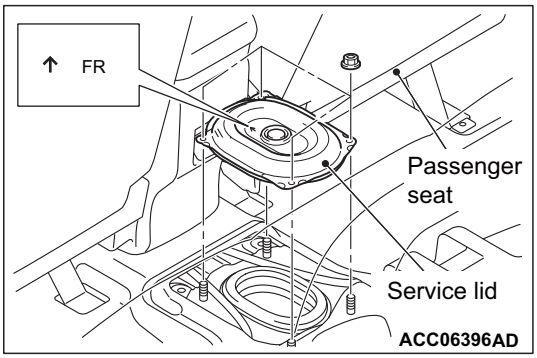

2. The arrow on the service lid should face towards the front of the vehicle.
3. Tighten the service lid mounting nuts.

⚠ CAUTION

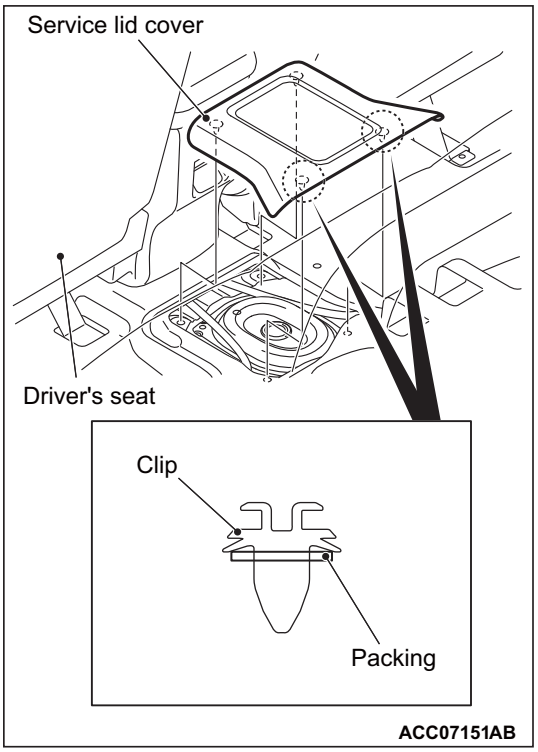

The service lid cover mounting clip (two at the rear of the vehicle) is assembled with a packing to avoid water entry. When you install the service lid, make sure that this packing is not deformed or missing.

4. Install the service lid cover.

ACTION WHEN HIGH VOLTAGE CANNOT BE SHUT OFF

SPECIAL TOOL (REFERENCE ONLY)

Tool	Number	Name	Use
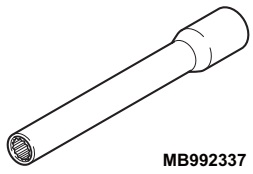 MB992337	MB992337	Electric insulation socket	**⚠ CAUTION** **This tool is the insulation tool which prevents the circuit of the equipment from shorting caused by tool dropping, etc. It does not isolate the operator from the equipment. When using this tool, be sure to wear the electric insulation gloves.** • When shutoff of the high voltage is difficult, and the drive battery cable and the EV charger cable (quick charging) connected to the drive battery are removed • When shutoff of the high voltage is difficult, and the drive battery cable and the motor (electric motor unit) cable connected to inverter are removed • Alternatively, when a short circuit of the equipment may be present with the damaged vehicle, etc.

⚠ ***DANGER***

Be sure to wear the electric insulation gloves (special tool) during this work.

⚠ ***DANGER***

Be sure to wear the electric insulation socket (MB992337) during this work.

When the high voltage remains even after the shut-off of the high voltage is performed, or when the high voltage shut-off work itself is difficult because of the accidental damages, perform the security according to the following procedure.

1. Remove the work-hole lid.

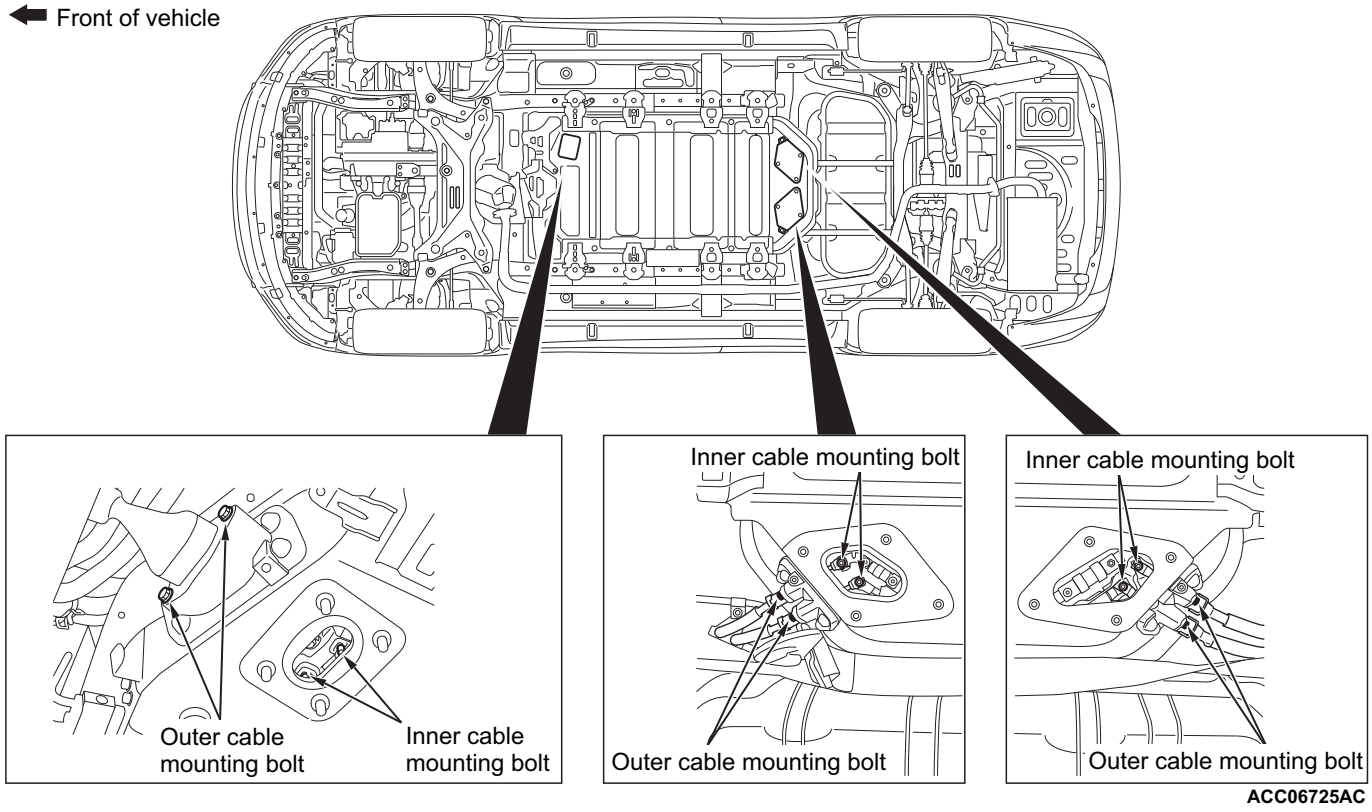

ACC06725AC

2. Remove the six inner cable mounting bolts.
3. Remove the six outer cable mounting bolts.
4. Pull out the drive battery cable <front and rear> and the EV charger cable (quick charging) from the drive battery.

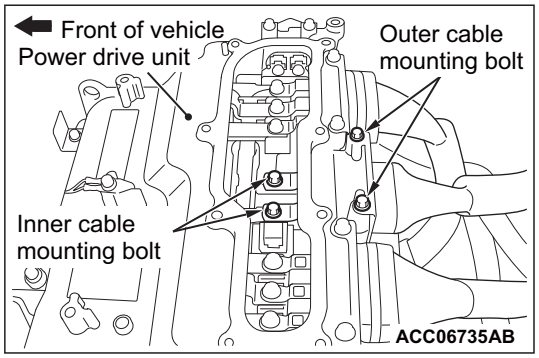

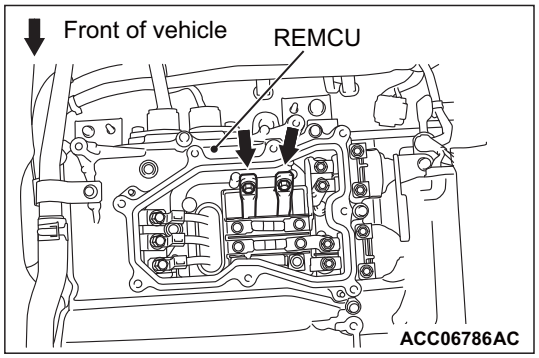

5. If steps 1 to 4 are difficult to perform or it is necessary to carry out any service work in the engine compartment or the electric motor unit compartment, disconnect the drive battery cable at the power drive unit and the REMCU side.

ACTION WHEN HIGH-VOLTAGE SHUT-OFF SYSTEM IS OPERATED

A high-voltage shut-off system isolates high voltage in the event of a crash. When this system operates, diagnose the post-collision vehicles.After the diagnosis, also erase the PHEV-ECU related diagnosis code.

HIGH-VOLTAGE CONNECTOR REMOVAL STEPS

⚠ ***DANGER***

- ***When adjusting the high-voltage parts, remove the service plug.***
- ***When the lock of the connector is damaged, be sure to replace the wiring harness assembly.***

⚠ **CAUTION**

Be sure to release the lock of the connector with your hands, because use of a tool or others may damage the connector.

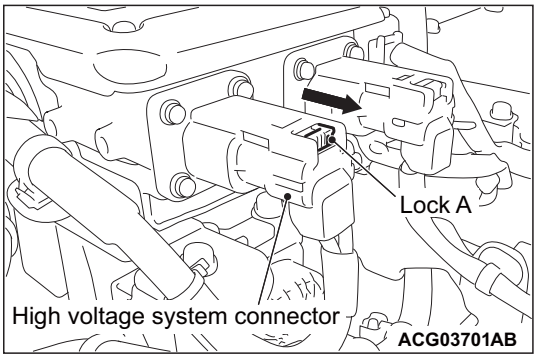

1. Slide the lock (A) towards the arrow direction to disengage it.

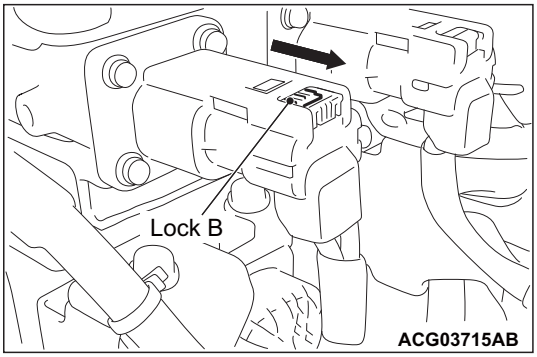

2. Depress the lock (B) and pull out the connector towards the arrow direction to its stop position.

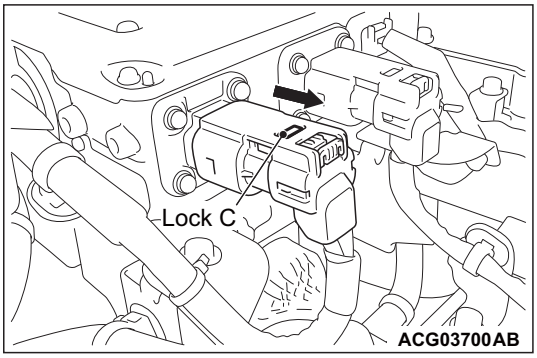

3. Depress the lock (C) and disconnect the connector by pulling out it towards the arrow direction.

LABEL LOCATION

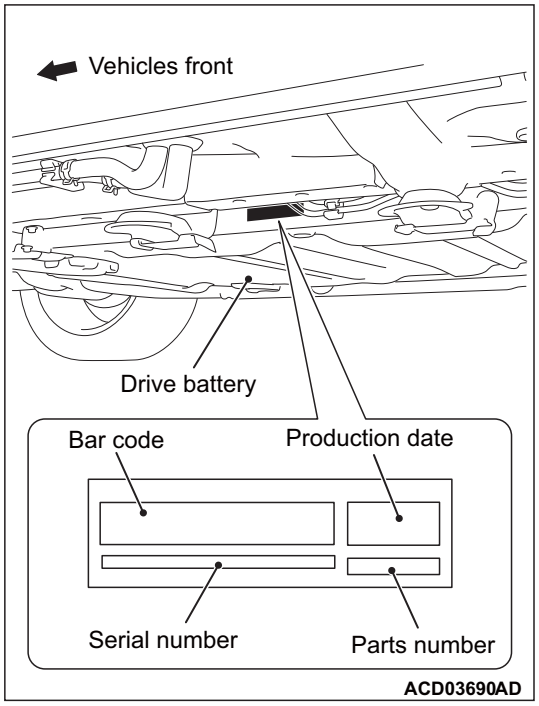

DRIVE BATTERY COOLING FAN CONTROL

During the quick charge, large currents are input into the drive battery to swiftly complete the charge. When the READY indicator is illuminated, the large currents are input into the drive battery.This causes the temperatures in the drive battery to easily increase. For this reason, the BMU drives the drive battery cooling fan, according to the drive battery cooling request signal from the PHEV-ECU. The air circulation in the drive battery cools the temperatures.

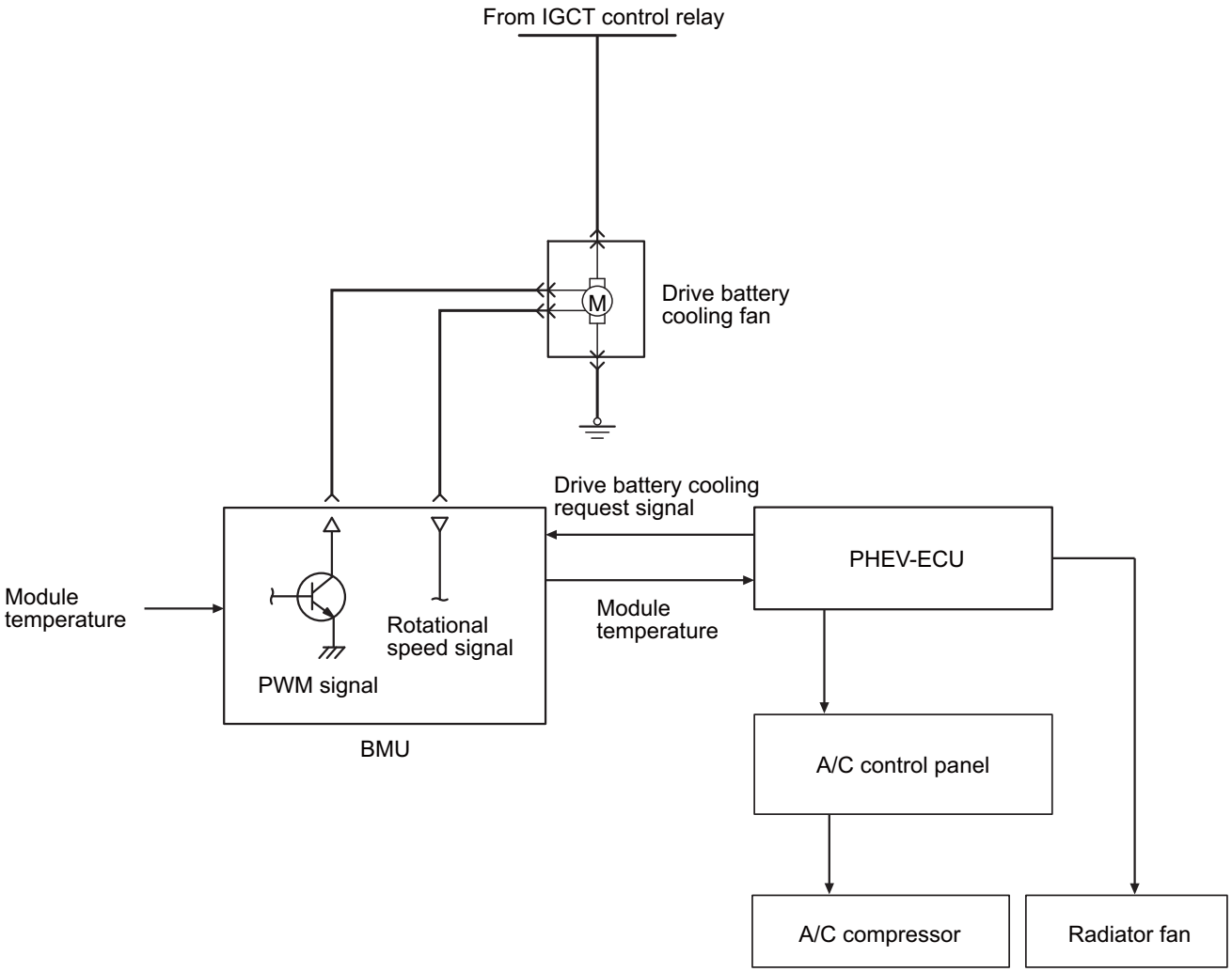

AKC00412 AC

When the quick charge is performed or when the READY indicator is illuminated, the BMU should send the module temperature information to the PHEV-ECU through the CAN.
The PHEV-ECU should send the driving battery cooling request signal to the BMU when one of the following two conditions is met:

- When the difference between the highest module temperature and the lowest module temperature exceeds the specified temperature.
- When the highest module temperature exceeds the specified temperature.

To the drive battery cooling fan, the BMU inputs the PWM signal in accordance with the drive battery cooling request signal. Therefore, the drive battery cooling fan is driven.
When the drive battery temperature increases and is higher than the specified temperature, the PHEV-ECU should drive the radiator fan or send the compressor operation request signal to the compressor & heater controller through the CAN. Thus, the drive battery cooling evaporator cools the air in the drive battery.

Cooling air flow in drive battery

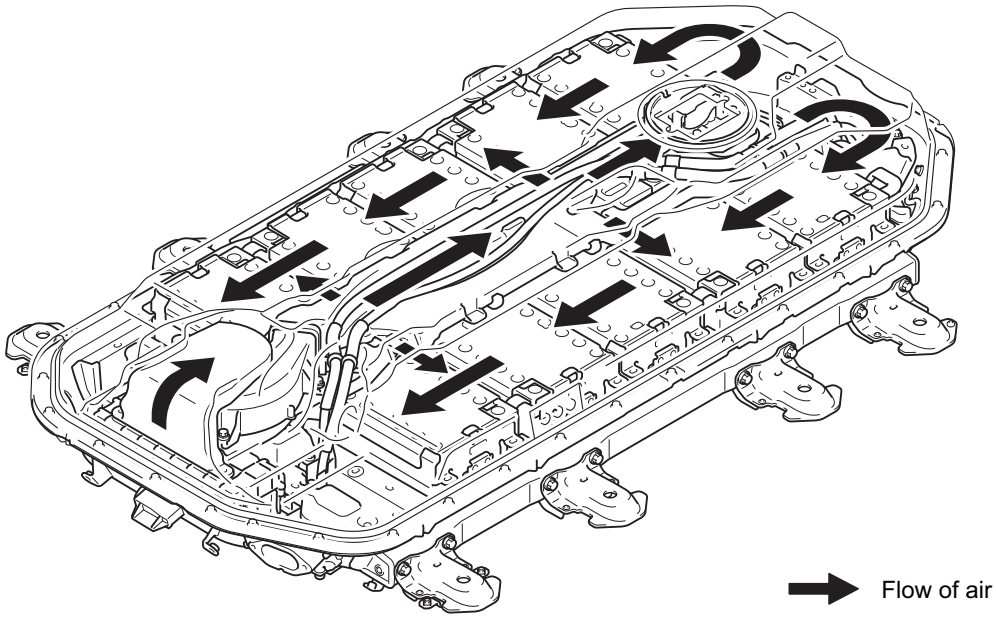

AKC00381AC

The cooling air is designed to flow among the modules to balance the temperatures.

AUXILIARY BATTERY

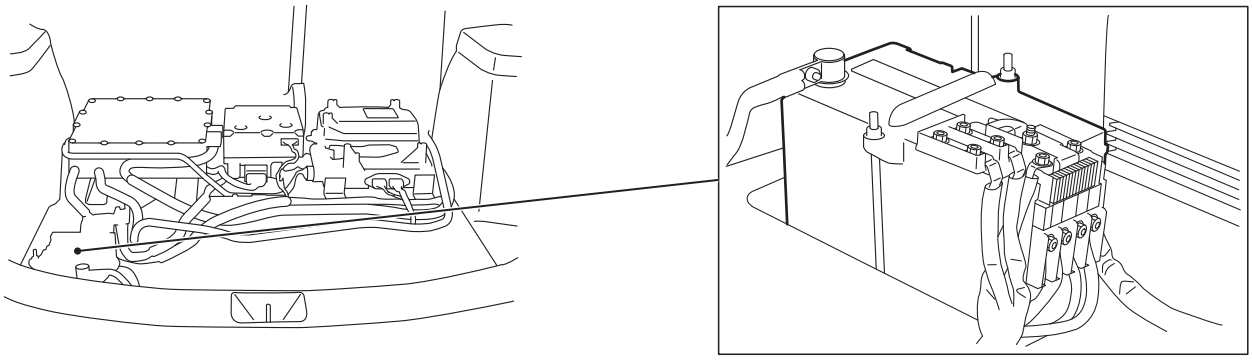

ACI01946AB

Item	S46B24L(S)
Voltage V	12
Capacity (5-hour rate) Ah	36
Electrolytic fluid specific gravity (fully charged state at 20°C)	1.220 - 1.290

GROUP 5

AXLES, WHEELS, TYRES AND SUSPENSION

CONTENTS

5.1. AXLES 5-2
5.1.1. Axles 5-2
5.1.2. Stub axles 5-5
5.1.3. Wheel bearings 5-5

5.2. WHEELS AND TYRES 5-5
5.2.1. Road wheel hub 5-5
5.2.2. Wheels 5-6
5.2.3. Tyres 5-6

5.3. SUSPENSION SYSTEM 5-9
5.3.1. Springs and stabiliser 5-9
5.3.2. Shock absorbers 5-9
5.3.2.1. efficiency testing of damping (X)2 5-9
5.3.3. Torque tubes, radius arms, wishbones and suspension arms 5-9
5.3.4. Suspension joints 5-9
5.3.5. Air suspension 5-9

5.1. AXLES

5.1.1. Axles

M90501010A0009

FRONT AXLE

CONSTRUCTION DIAGRAM

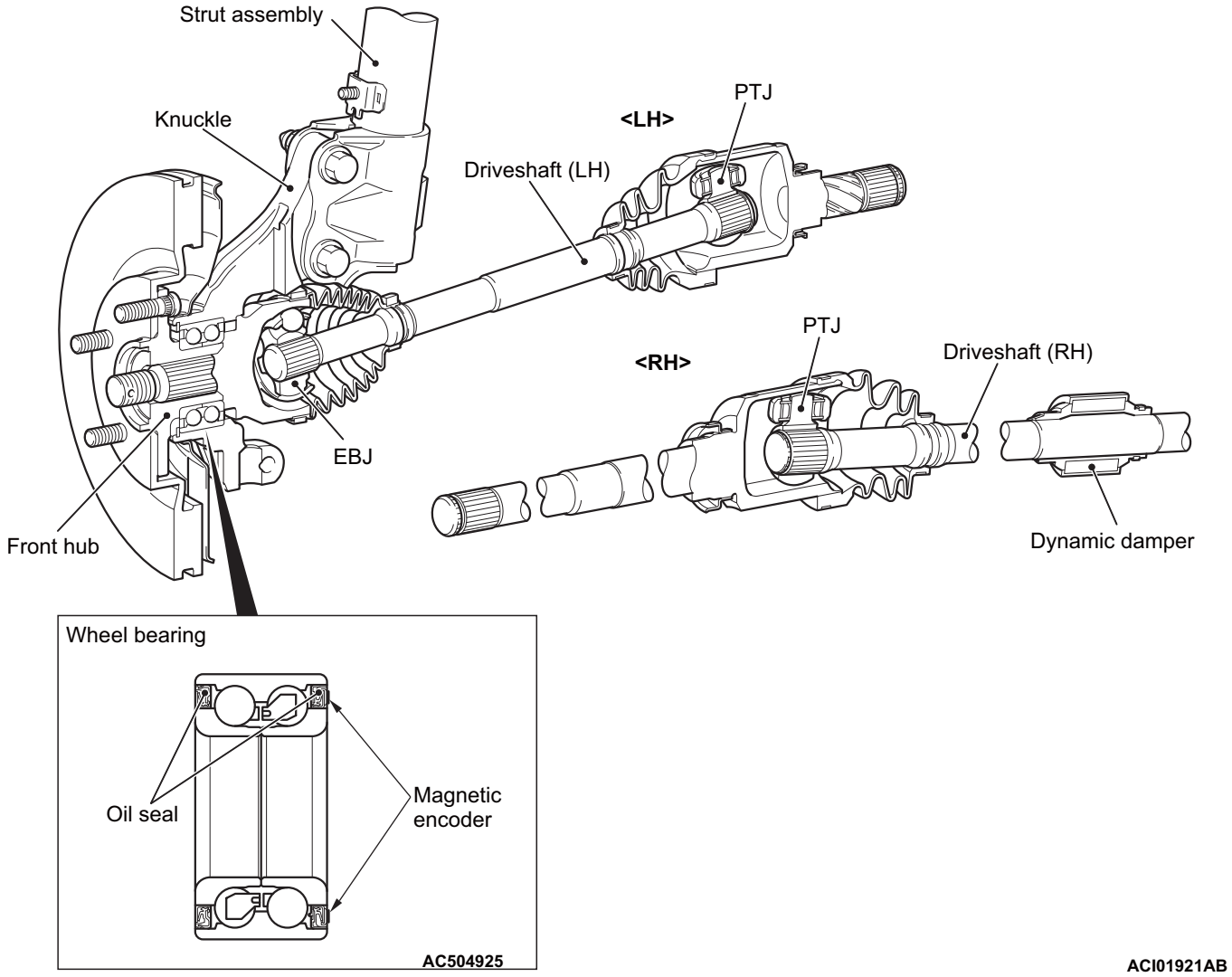

REAR AXLE

CONSTRUCTION DIAGRAM

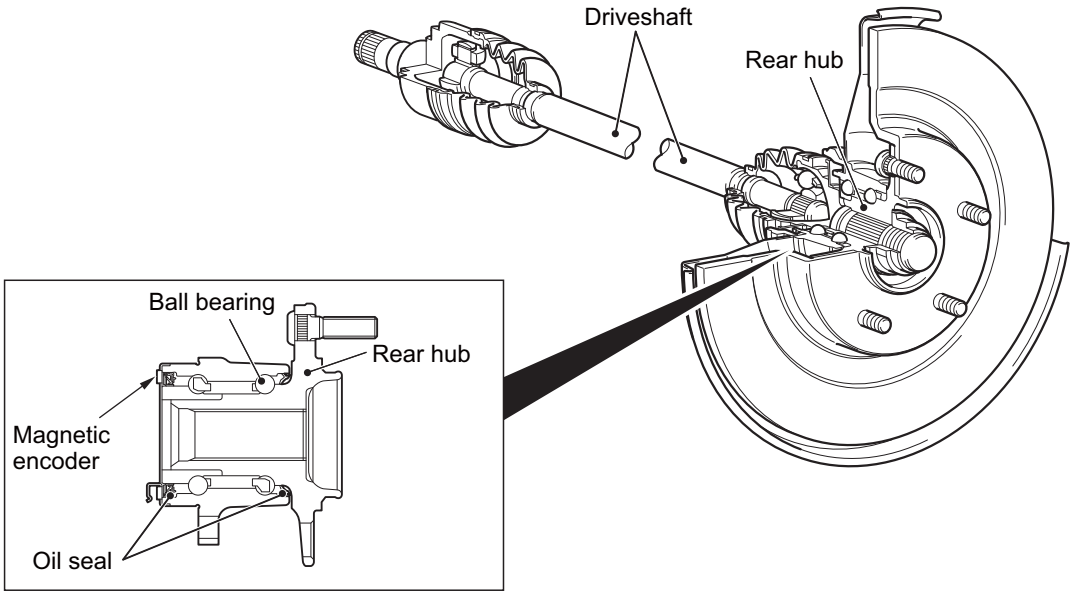

ACC02148AB

CHECK SUSPENSION SYSTEM FOR DAMAGE AND LOOSENESS

1. Check each portion of suspension for damage visually.
2. Check each installation bolt and nut for looseness by spanner or similar tool.

FRONT SUSPENSION

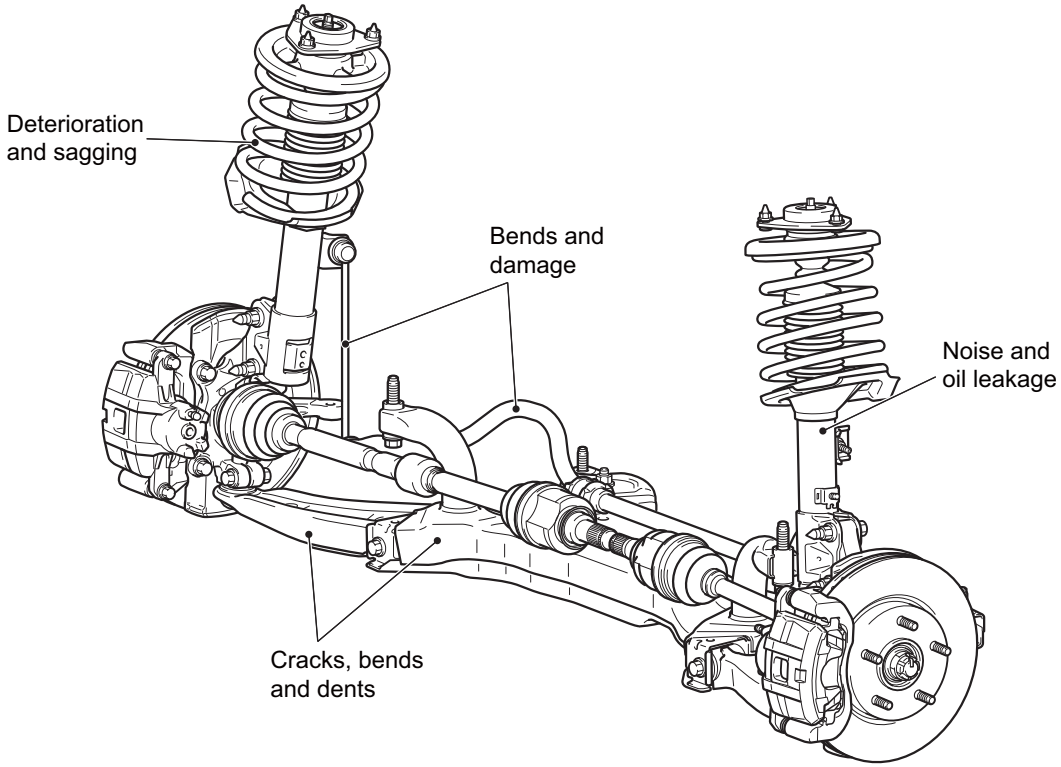

REAR SUSPENSION

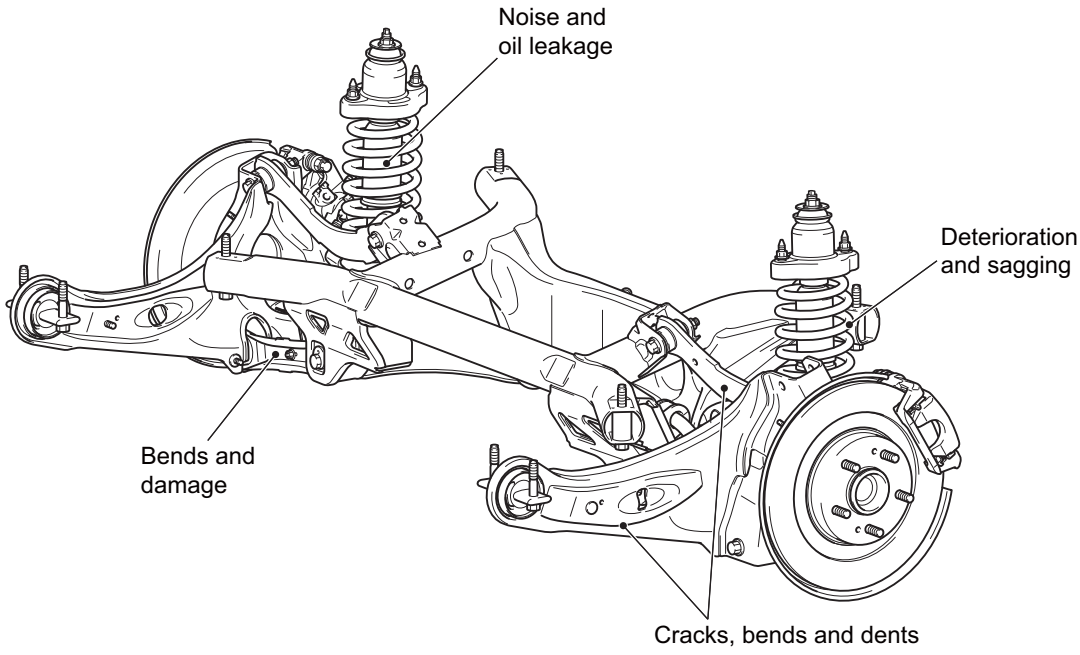

CHECK SUSPENSION ARM BALL JOINTS FOR PLAY, AND DUST COVERS FOR DAMAGE

LOWER ARM BALL JOINT AXIAL PLAY CHECK

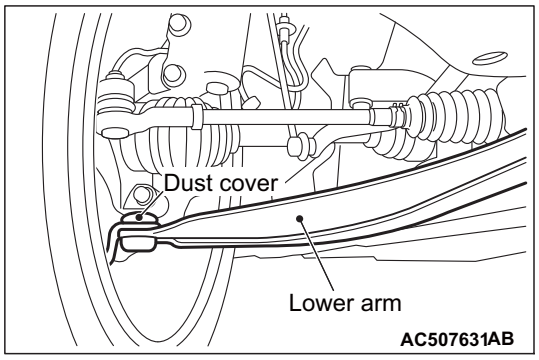

1. Raise the vehicle.
2. Move the lower arm up and down with your hands to check for an excessive play in the axial direction of the ball joint. If there is an excessive play, replace the lower arm assembly.

DUST COVERS FOR DAMAGE

Check dust covers for damage.

CHECK DRIVESHAFT BOOTS FOR DAMAGE

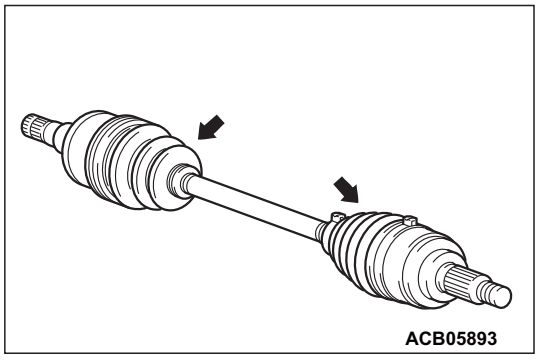

Check the driveshaft boots for damage.

CHECK FRONT AND REAR WHEEL BEARINGS FOR PLAY

1. Remove the wheel assembly and the brake pad assembly.
2. Insert M12 plain washers, and tighten the nuts (M12 × 1.5) diagonally and evenly to the specified torque (98±10N·m) to secure the brake disc to the hub assembly.

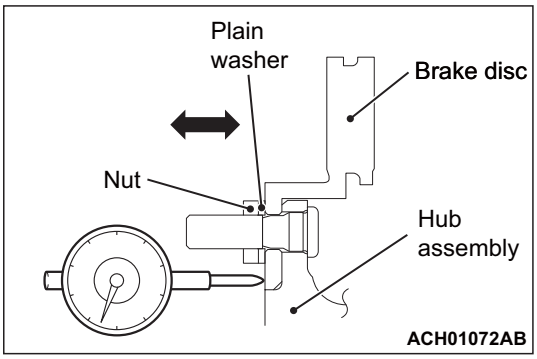

3. Set a dial gauge as shown in the figure. Move the hub in the axial direction and measure the axial play.

   Limit:
   0.05 mm <Front>
   0.05 mm <Rear>

4. On completion, install the wheel assembly and the brake pad assembly.

5.1.2. Stub axles

M90501020A0009

"Not Applicable"

5.1.3. Wheel bearings

M90501030A0009

"Not Applicable"

5.2. WHEELS AND TYRES

5.2.1. Road wheel hub

M90502010A0009

"Not Applicable"

5.2.2. Wheels

M90502020A0009

SPECIFICATIONS

Road wheel and tyre

Item		Standard	Option
Wheel	Type	Aluminium type	Aluminium type
	Size	18 × 7J	16 × 6.5J
	Amount of wheel offset mm	38	38
	PCD mm	114.3	114.3
Tyre	Size	225/55R18 98H	215/70R16 100H

NOTE: PCD indicates the pitch circle diameter of the wheel installation holes.

5.2.3. Tyres

M90502030A0009

The wheels and tyres of the following specifications have been established.

SPECIFICATIONS

Refer to 5.2.2. Wheels SPECIFICATIONS P.5-6.

TYRE PRESSURE MONITORING SYSTEM (TPMS)

CONSTRUCTION DIAGRAM

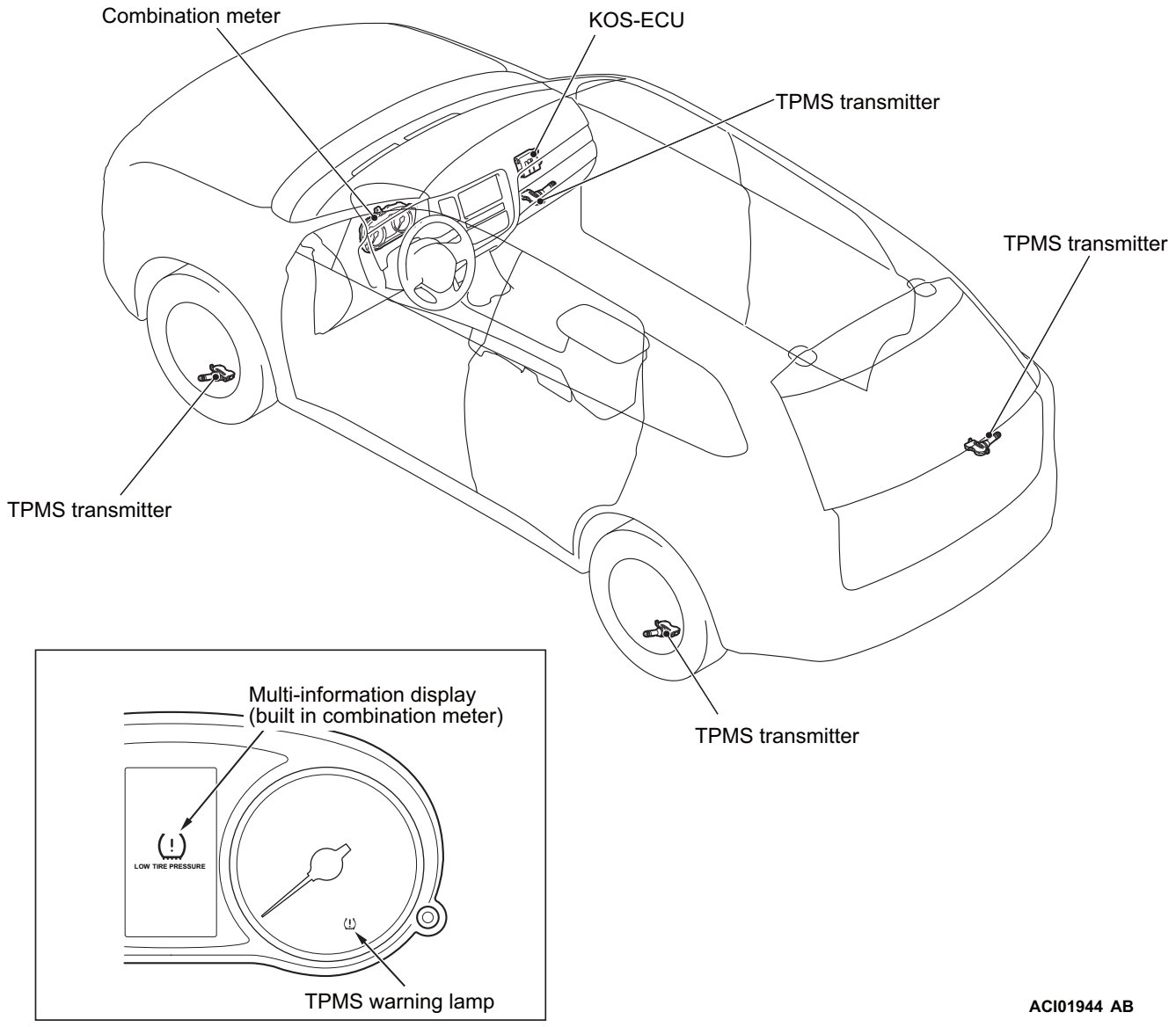

Main components and functions

Parts name	Functional description
KOS-ECU	Wireless communication with the TPMS transmitter
TPMS transmitter	Measure tyre pressure directly, then send radio frequency signal to receiver antenna module.
Combination meter (Multi information display, TPMS warning lamp, tyre ID set changeover function)	Communicates with KOS-ECU via CAN. Receives the warning request or warning information from KOS-ECU, activates* the warning lamp. Warning symbol and message is additionally displayed on the multi information display. When executing the tyre ID set changeover function, the execution menu is displayed.

NOTE: *: Illuminates for tyre pressure warning. Flashes for about 1 minute and then continuously illuminated for TPMS malfunction warning.

SYSTEM CONFIGURATION

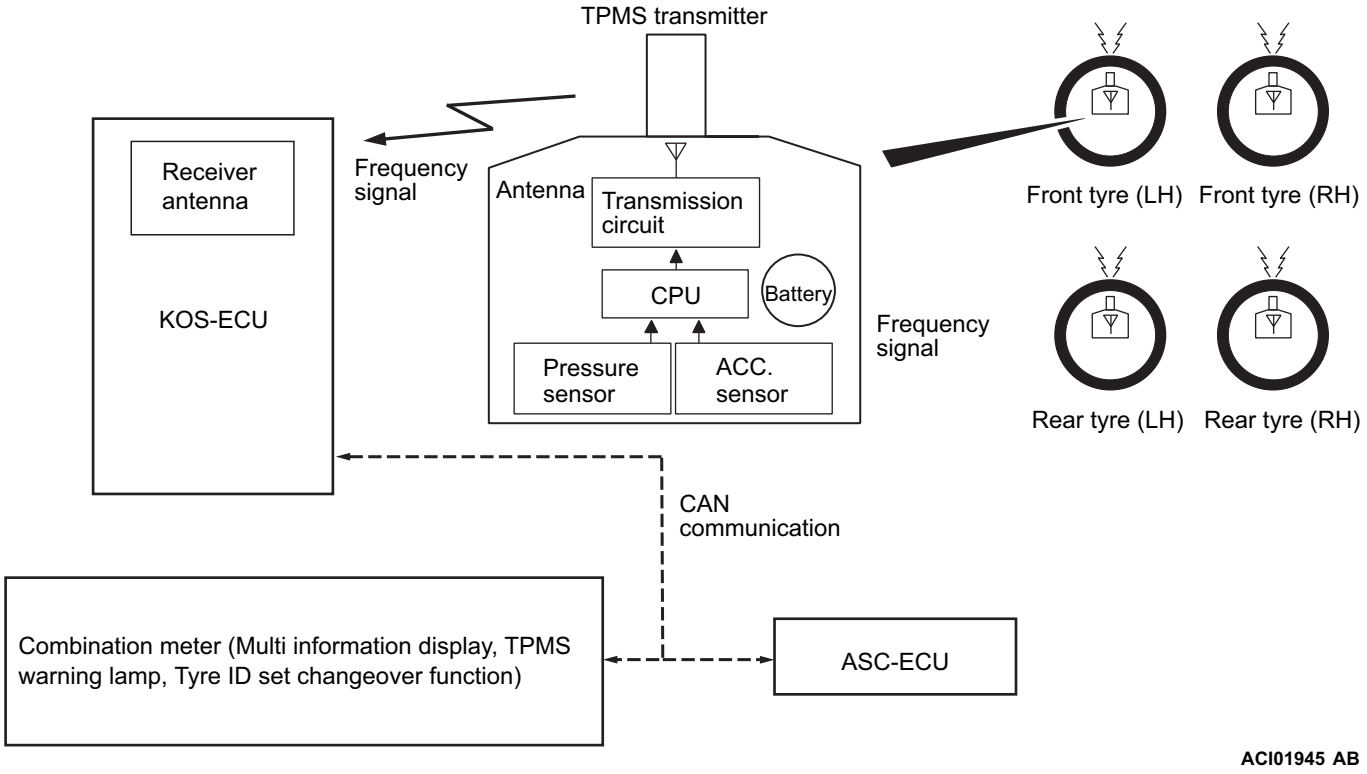

TYRE PRESSURE MONITORING SYSTEM (TPMS) FUNCTION

When the tyre pressure becomes under the specified value, the TPMS function warns the driver of that state by illuminating the TPMS warning lamp.

OPERATION

- The signals from the TPMS transmitter are received by the KOS-ECU.
- KOS-ECU processes input signals from each TPMS transmitter as well as vehicle speed signals from the ASC-ECU. It receives the atmospheric pressure signal from engine-ECU, and when the atmospheric pressure is low (such as at high altitude), it calibrates the tyre pressure received from TPMS transmitter and makes a judgement of warning. When the road tyre pressure is low, it sends a warning signal causing the TPMS warning lamp to be illuminated. When the TPMS has problems, it sends a warning signal causing the TPMS warning lamp to be flashed*.

  NOTE: *: Change to continuous illumination after flashing for about 1 minute.
- For 3 seconds after the engine switch is turned to the "ON" position, KOS-ECU illuminates the TPMS warning lamp to check any breaks in the TPMS warning lamp circuit.
- By connecting the scan tool (M.U.T.-IIISE) to the diagnosis connector, data stored in KOS-ECU (data of tyre pressure and TPMS transmitter ID, the alarm status and warning history, etc.) can be displayed and TPMS transmitter ID can be registered.
- Two sets of four TPMS transmitters can be registered as sets 1 and 2.

  NOTE: If the TPMS transmitter is replaced, register the ID codes of all TPMS transmitters again about the ID set of tyre which includes the replaced transmitter using the scan tool (M.U.T.-IIISE).

TPMS TRANSMITTER (TYRE PRESSURE SENSOR)

The TPMS transmitter combines the valve and tyre pressure sensor in a single unit. The TPMS transmitters are mounted inside the tyres. The TPMS transmitter measures tyre pressure directly with its tyre pressure sensor and sends radio frequency signals to KOS-ECU. The TPMS transmitter includes acceleration sensor that senses tyre rotation, and change tyre pressure sampling and data transmission timing when vehicle is running.

NOTE: Use only genuine wheels. The use of non-genuine wheels may cause the improper installation of the TPMS transmitters, possibly resulting in air leakage and damage to the TPMS transmitter.

TYRE PRESSURE SAMPLING TIMING

Vehicle status	Sampling timing
At vehicle moving	once every 5 seconds
At vehicle stationary	once every 1 minute

NOTE: Vehicle moving = vehicle speed: approximately 25 km/h or more

DATA TRANSMISSION TIMING

Vehicle status	Transmission timing
At vehicle moving	once every 1 minute*
At vehicle stationary	once every 13 hours

If a sampled pressure varies by ±10 kPa from the last transmitted pressure value, an additional transmission will occur.

NOTE: *: Once every 15 seconds for first 30 transmission after vehicle starts moving.

5.3. SUSPENSION SYSTEM

5.3.1. Springs and stabiliser

M90503010A0009

"Not Applicable"

5.3.2. Shock absorbers

M90503020A0009

"Not Applicable"

5.3.2.1. efficiency testing of damping (X)2

M90503021A0009

"Not Applicable"

5.3.3. Torque tubes, radius arms, wishbones and suspension arms

M90503030A0009

"Not Applicable"

5.3.4. Suspension joints

M90503040A0009

"Not Applicable"

5.3.5. Air suspension

M90503050A0009

"Not Applicable"

GROUP 6

CHASSIS AND CHASSIS ATTACHMENTS

CONTENTS

6.1. CHASSIS OR FRAME AND ATTACHMENTS 6-2

6.1.1. General condition 6-2
6.1.2. Exhaust pipes and silencers 6-2
6.1.3. Fuel tank and pipes (including heating fuel tank and pipes) 6-2
6.1.4. Bumpers, lateral protection and rear underrun devices 6-2
6.1.5. Spare wheel carrier (if fitted) 6-2
6.1.6. Mechanical coupling and towing device 6-2
6.1.7. Transmission 6-2
6.1.8. Engine mountings 6-2
6.1.9. Engine performance (X) 2 6-2

6.2. CAB AND BODYWORK 6-3

6.2.1. Condition 6-3
6.2.2. Mounting 6-3
6.2.3. Doors and door catches 6-3
6.2.4. Floor 6-3
6.2.5. Driver's seat 6-3
6.2.6. Other seats 6-3
6.2.7. Driving controls 6-3
6.2.8. Cab steps 6-3
6.2.9. Other interior and exterior fittings and equipment 6-3
6.2.10. Mudguards (wings), spray suppression devices 6-3
6.2.11. Stand 6-3
6.2.12. Handgrips and footrests 6-3

6.1. CHASSIS OR FRAME AND ATTACHMENTS

6.1.1. General condition

M90601010A0008

"Not Applicable"

6.1.2. Exhaust pipes and silencers

M90601020A0008

"Not Applicable"

6.1.3. Fuel tank and pipes (including heating fuel tank and pipes)

M90601030A0008

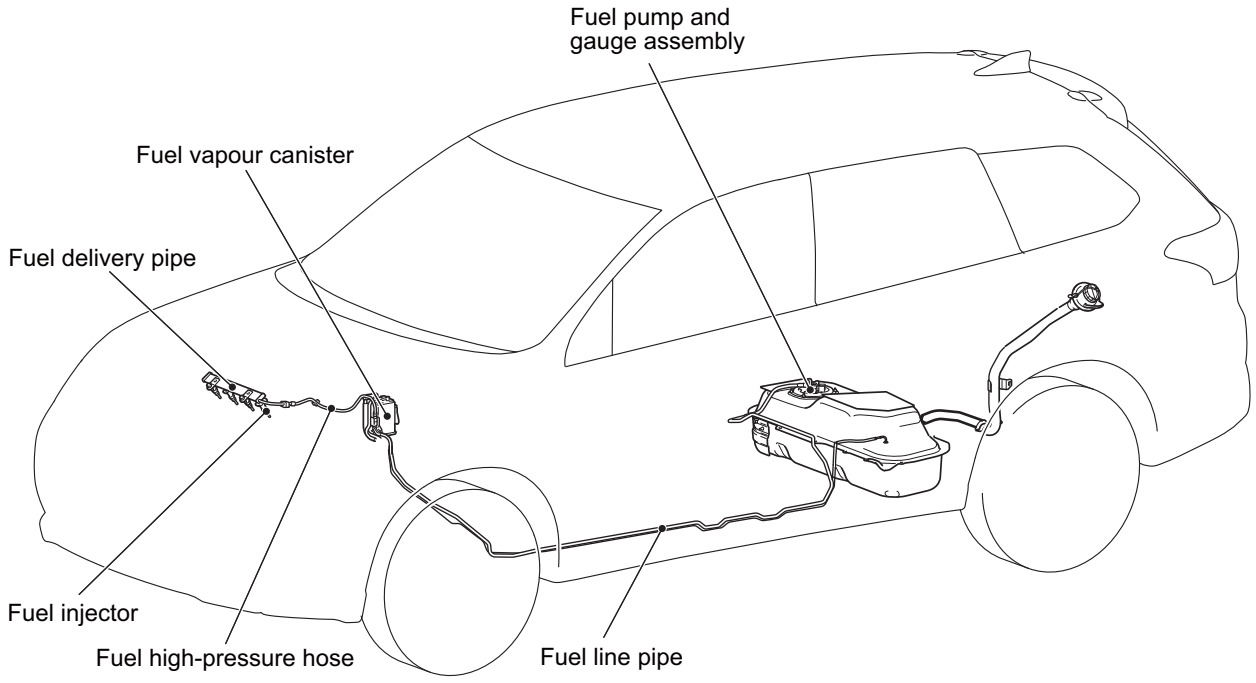

ACI01922AB

6.1.4. Bumpers, lateral protection and rear underrun devices

M90601040A0008

"Not Applicable"

6.1.5. Spare wheel carrier (if fitted)

M90601050A0008

"Not Applicable"

6.1.6. Mechanical coupling and towing device

M90601060A0008

"Not Applicable"

6.1.7. Transmission

M90601070A0008

"Not Applicable"

6.1.8. Engine mountings

M90601080A0008

"Not Applicable"

6.1.9. Engine performance (X) 2

M90601090A0009

“Query raised for this content”

6.2. CAB AND BODYWORK

6.2.1. Condition

M90602010A0008

"Not Applicable"

6.2.2. Mounting

M90602020A0008

"Not Applicable"

6.2.3. Doors and door catches

M90602030A0008

"Not Applicable"

6.2.4. Floor

M90602040A0008

"Not Applicable"

6.2.5. Driver's seat

M90602050A0008

"Not Applicable"

6.2.6. Other seats

M90602060A0008

- Max Number of seats total (excluding driver's seat) - 4
- Number of rear-facing seats - 0

6.2.7. Driving controls

M90602070A0008

"Not Applicable"

6.2.8. Cab steps

M90602080A0008

"Not Applicable"

6.2.9. Other interior and exterior fittings and equipment

M90602090A0008

"Not Applicable"

6.2.10. Mudguards (wings), spray suppression devices

M90602100A0008

"Not Applicable"

6.2.11. Stand

M90602110A0008

"Not Applicable"

6.2.12. Handgrips and footrests

M90602120A0008

"Not Applicable"

GROUP 7

OTHER EQUIPMENT

CONTENTS

7.1. SAFETY-BELTS/BUCKLES AND RESTRAINT SYSTEMS (AS REGARDS L CATEGORY: L6/L7) 7-2

7.1.1. Security of safety-belts/buckles mounting 7-2
7.1.2. Condition of safety-belts/buckles. . . . 7-3
7.1.3. Safety belt load limiter. 7-3
7.1.4. Safety belt Pre-tensioners. 7-3
7.1.5. Airbag 7-5
7.1.6. SRS Systems 7-5

7.2. FIRE EXTINGUISHER (X)2. 7-6

7.3. LOCKS AND ANTI-THEFT DEVICE 7-6

7.4. WARNING TRIANGLE (IF REQUIRED) (X)2 7-6

7.5. FIRST AID KIT. (IF REQUIRED) (X)2. 7-6

7.6. WHEEL CHOCKS (WEDGES) (IF REQUIRED) (X)2 7-6

7.7. AUDIBLE WARNING DEVICE. . . 7-6

7.8. SPEEDOMETER 7-6

7.9. TACHOGRAPH (IF FITTED/REQUIRED) 7-6

7.10. SPEED LIMITATION DEVICE (IF FITTED/REQUIRED) 7-6

7.11. ODOMETER IF AVAILABLE (X)2 7-6

7.12. ELECTRONIC STABILITY CONTROL (ESC) IF FITTED/REQUIRED 7-7

7.1. SAFETY-BELTS/BUCKLES AND RESTRAINT SYSTEMS (AS REGARDS L CATEGORY: L6/L7)

7.1.1. Security of safety-belts/buckles mounting

M90701010A0008

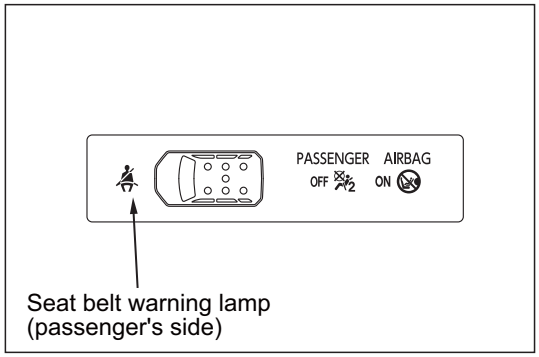

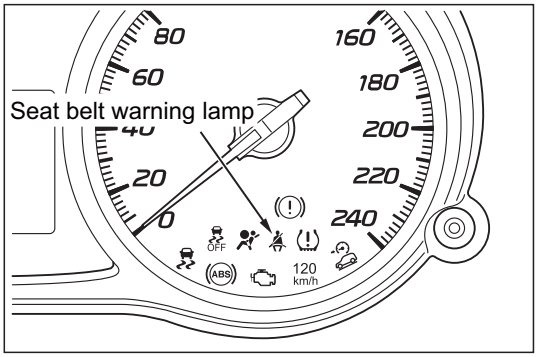

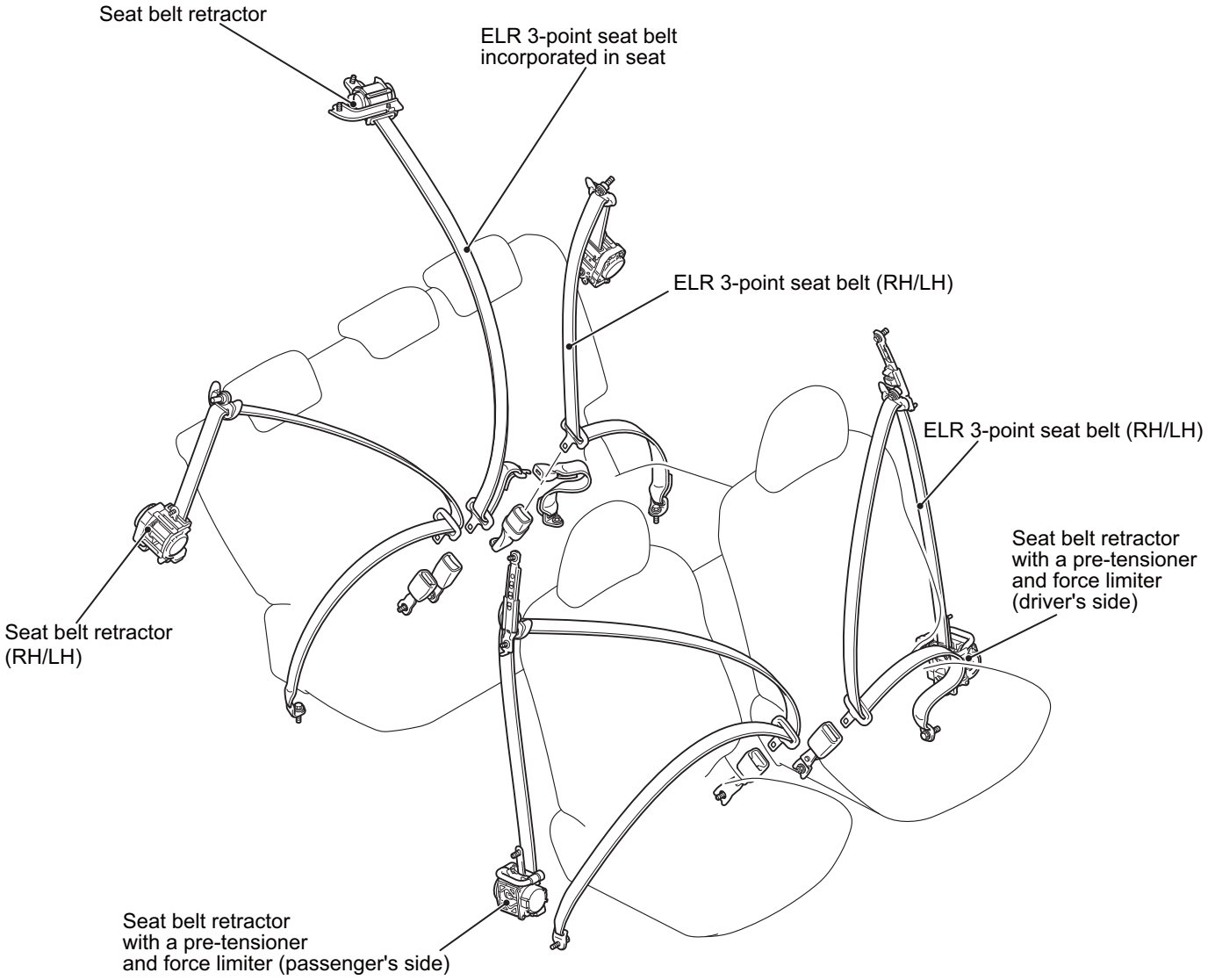

BCC04516AA

The seat belts offer the following features:

<Front seat belt>

- The 3-point seat belt with ELR has been adopted together with a pre-tensioner and force limiter.
- A seat belt warning lamp has been included on the combination meter to encourage the driver to fasten the seat belt when the belt is not connected.
- A seat belt warning lamp has been included on the centre panel to encourage the passenger to fasten the seat belt when the belt is not connected.

<Second seat belt>

- 3-point seat belt with ELR has been installed.
- The seat belt tongue can be inserted into the buckle easily as the self-standing buckles are used for all seating positions.

SEAT BELT REMINDER SENSOR <PASSENGER'S SIDE>

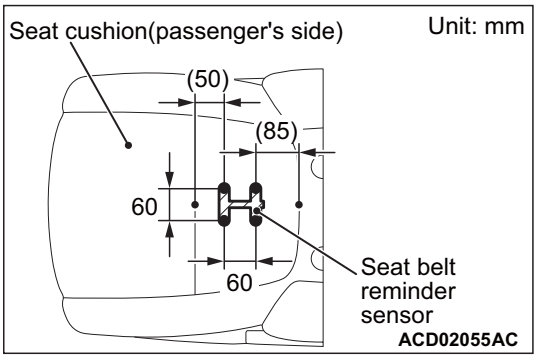

A seat belt reminder sensor is embedded in the front passenger's seat cushion. This sensor detects whether the front passenger is seated or not. If the passenger is seated without fastening the seat belt, the system will issue a warning to fasten the seat belt.Four electrodes of the sensor are located at each corner on a thin plastic film.The system will determine that the passenger is seated if any of the sensor electrodes are closed due to a load. If the seat belt is not fastened, the system will activate the warning lamp and the buzzer.If the vehicle is driven without fastening the seat belt, the warning lamp and the buzzer will be activated for approx. 90 seconds to warn the passenger to fasten the seat belt.

7.1.2. Condition of safety-belts/buckles.

M90701020A0008

Refer to 7.1.1. Security of safety-belts/buckles mounting P.7-2.

7.1.3. Safety belt load limiter

M90701030A0008

Refer to 7.1.1. Security of safety-belts/buckles mounting P.7-2.

7.1.4. Safety belt Pre-tensioners

M90701040A0008

The Supplemental Restraint System (SRS) and seat belt with pre-tensioner is designed to supplement the driver's and front passenger's seat belts to help reduce the risk or severity of injury to the driver and front passenger by activating and deploying both front air bags in certain frontal collisions. The side-air bag and the curtain air bag are activated when an impact exceeds the threshold upon a side collision, and inflates to protect the heads of the occupants in the front and rear seats.
The SRS consists of air bag modules, SRS air bag control unit (SRS-ECU), two front impact sensors, two side impact sensors, SRS warning lamp, clock spring, passenger's air bag cut off switch, passenger's air bag OFF indicator lamp, lap pre-tensioner and seat belt pre-tensioner. Front air bags are located in the centre of the steering wheel and above the glove box. Each air bag is made up of a folded air bag and an inflator unit. Side-airbags are located inside the front seatback assemblies. The curtain air bag module consists of an air bag, an inflator, and the fixing gear relating to those parts, and is installed in the roof side sections (from the driver's and the passenger's front pillars to the rear pillars). The SRS-ECU under the front floor console monitors the system and has a front air bag analogue G-sensor, front air bag analogue G-sensor and a side (curtain) air bag analogue G-sensor. The front impact sensor is installed on the front end upper bar in the engine room and contains an analogue G-sensor. The side impact sensor is installed in the lower parts of the centre pillars, and contains an analogue G-sensor.

The warning lamp on the instrument panel indicates the operational status of the SRS. The clock spring is installed in the steering column. The passenger’s air bag cut off switch is outside the instrument panel side. The passenger’s air bag OFF indicator lamp is installed in centre panel assembly. The lap pre-tensioner has been installed on the outer seat belt lower anchor side. The seat belt pre-tensioner is built into the driver's and passenger's front seat belt retractor.

Only authorized service personnel should do work on or around the SRS components. Those service personnel should read this manual carefully before starting any such work.

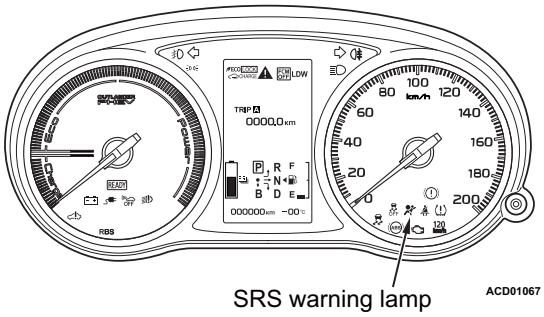

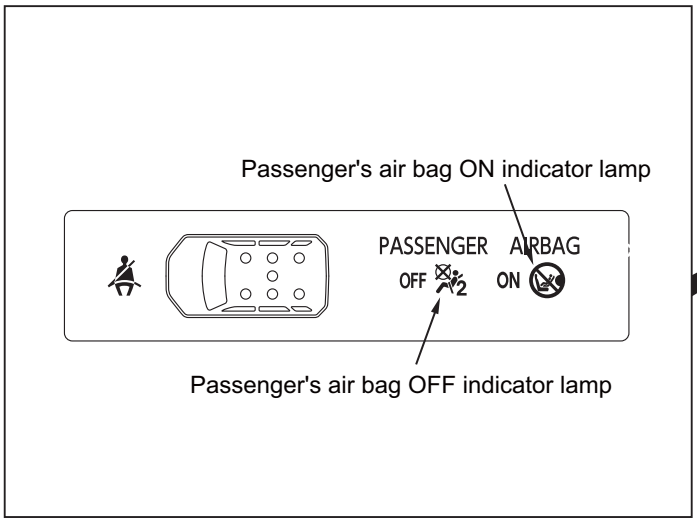

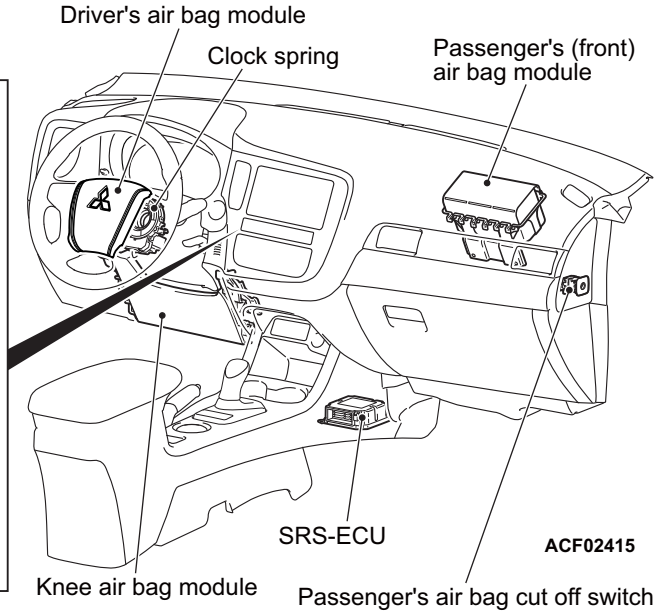

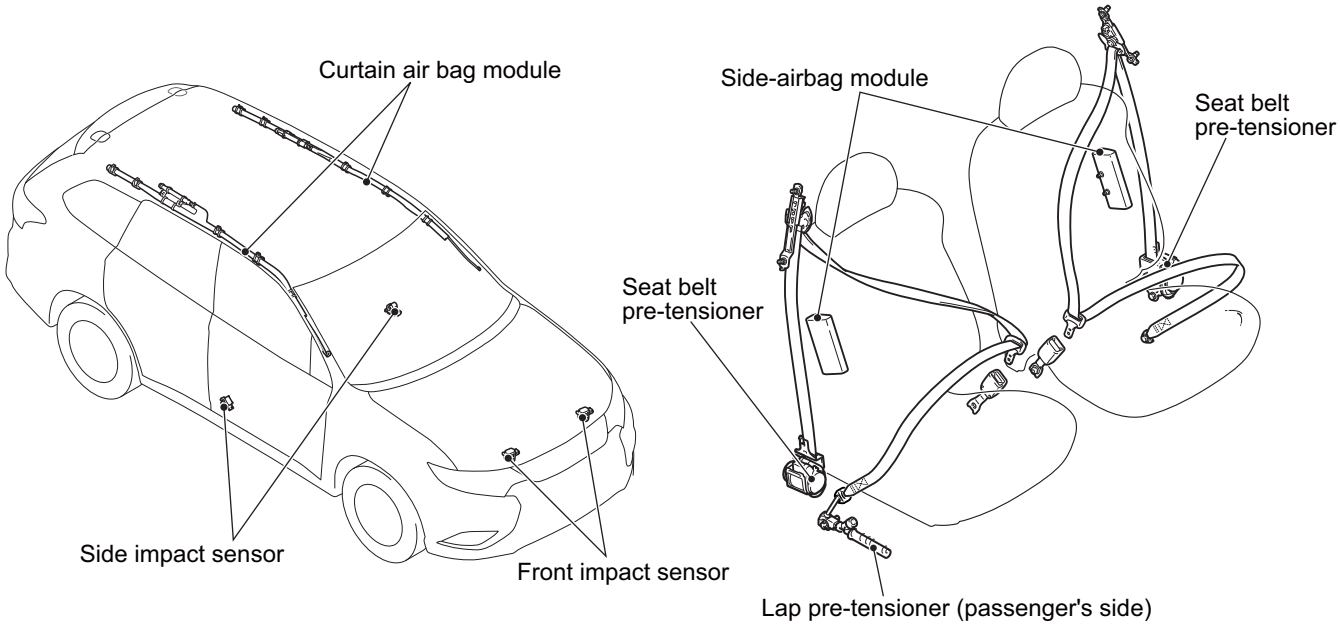

7.1.5. Airbag

M90701050A0008

Refer to 7.1.4. Safety belt Pre-tensioners P.7-3.

7.1.6. SRS Systems

M90701060A0008

Refer to 7.1.4. Safety belt Pre-tensioners P.7-3.

7.2. FIRE EXTINGUISHER (X)2

M90702000A0008

"Not Applicable"

7.3. LOCKS AND ANTI-THEFT DEVICE

M90703000A0008

"Not Applicable"

7.4. WARNING TRIANGLE (IF REQUIRED) (X)2

M90704000A0008

"Not Applicable"

7.5. FIRST AID KIT. (IF REQUIRED) (X)2

M90705000A0008

"Not Applicable"

7.6. WHEEL CHOCKS (WEDGES) (IF REQUIRED) (X)2

M90706000A0008

"Not Applicable"

7.7. AUDIBLE WARNING DEVICE

M90707000A0008

"Not Applicable"

7.8. SPEEDOMETER

M90708000A0008

"Not Applicable"

7.9. TACHOGRAPH (IF FITTED/REQUIRED)

M90709000A0008

"Not Applicable"

7.10. SPEED LIMITATION DEVICE (IF FITTED/REQUIRED)

M90710000A0008

"Not Applicable"

7.11. ODOMETER IF AVAILABLE (X)2

M90711000A0009

Visual Inspection

Check the odometer for displaying the total traveling distance of vehicle.

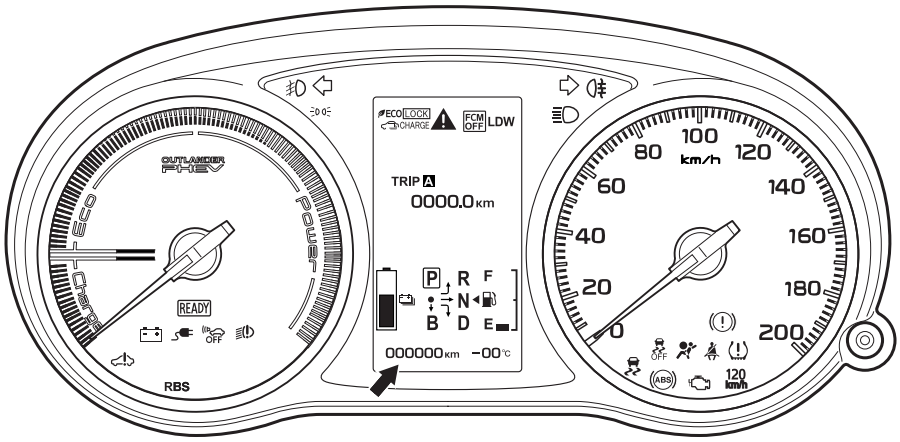

ACI01923 AB

7.12. ELECTRONIC STABILITY CONTROL (ESC) IF FITTED/REQUIRED

M90712000A0009

ABS WARNING LAMP, ASC WARNING/OPERATION LAMP, BRAKE WARNING LAMP AND BRAKE AUTO HOLD INDICATOR CHECK

Check that ABS and brake warning lamps, ASC warning/operation lamp, brake auto hold indicator illuminate as follows.

NOTE: The brake warning lamp is used as a warning lamp for parking brake, brake fluid level, and EBD control.

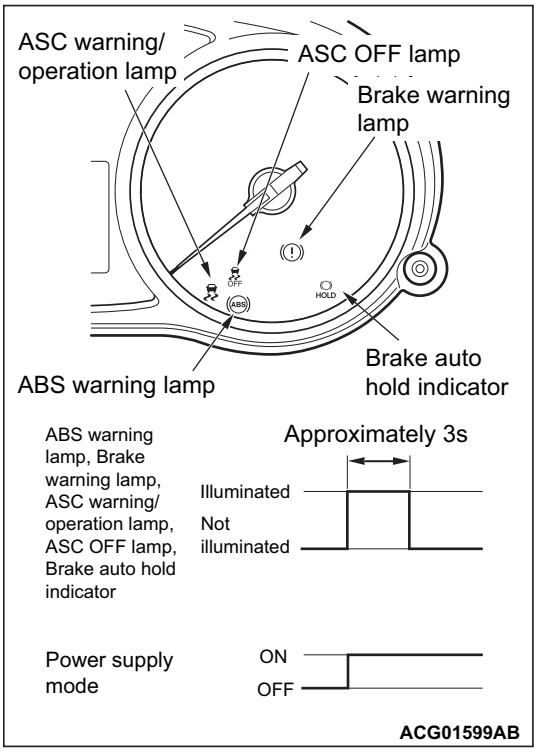

ACG01599AB

1. When the electric motor switch is turned ON, ABS and brake warning lamps, ASC warning/operation lamp, ASC OFF lamp, brake auto hold indicator illuminate.

2. The ABS and brake warning lamps, ASC warning/operation lamp, ASC OFF lamp, brake auto hold indicator illuminate for three seconds[*1] and then turn OFF[*2].
3. Otherwise, check the diagnosis code.

NOTE:

- [*1]: The ABS warning lamp, ASC warning/operation lamp, ASC OFF lamp may stay ON until the vehicle speed reaches 10 km/h. As far as ASC-ECU sets any diagnosis code related to the wheel speed sensor malfunction or the motor malfunction as past trouble, ASC-ECU continues illuminating the ABS warning lamp until it verifies that the malfunction for that code is resolved (startup check).
  If the steering wheel sensor or the G and yaw rate sensor system was detected to be defective during power supply mode of the electric motor switch being ON at the last time, the ASC warning/operation lamp and the ASC OFF lamp will illuminate until the vehicle speed reaches approx. 10 km/h, then the steering wheel is turned to either right or left and then the ECU determines that the system is normal.
- [*2]: The brake warning lamp does not turn OFF when the parking brake is applied or the brake fluid level is lowered.

GROUP 8

NUISANCE

CONTENTS

8.1. NOISE 8-2
8.1.1. Noise suppression system 8-2

8.2. EXHAUST EMISSIONS. 8-2
8.2.1. Positive ignition engine emissions . . 8-2
8.2.2. Compression ignition engine emissions 8-11

8.3. ELECTROMAGNETIC INTERFERENCE SUPPRESSION . . . 8-15

8.4. OTHER ITEMS RELATED TO THE ENVIRONMENT 8-15
8.4.1. Fluid leaks 8-15

8.1. NOISE

8.1.1. Noise suppression system

M90801010A0009

“Query raised for this content”

8.2. EXHAUST EMISSIONS

8.2.1. Positive ignition engine emissions

8.2.1.1. Exhaust emissions control equipment

M90802011A0019

CONSTRUCTION DIAGRAM

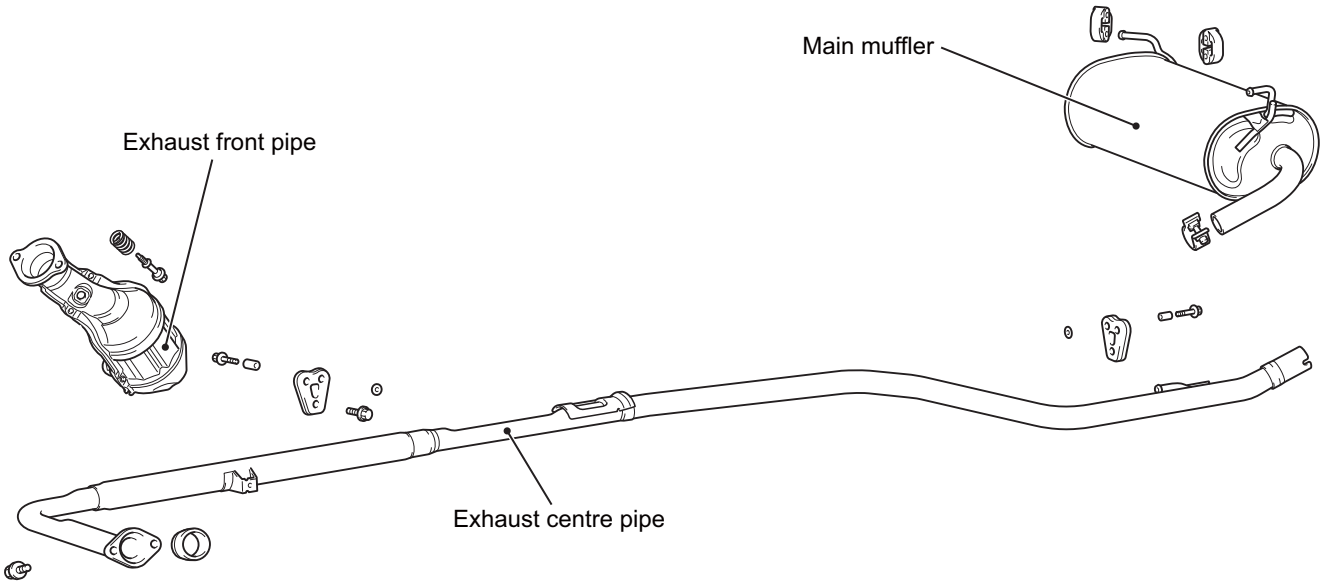

ACI01939AB

EMISSION REDUCTION SYSTEMS

These decrease CO, HC and NOx in the exhaust gases and consist of air-fuel ratio feedback control and catalytic converter.

FUEL INJECTION CONTROL

Fuel injection volume is regulated to obtain the optimum air-fuel ratio in accordance with the constant minute changes in engine driving conditions. Fuel injection volume is controlled by injector drive time (injection time). There is a prescribed basic drive time that varies according to the engine speed and intake air volume. Engine-ECU adds prescribed compensations to this basic drive time according to conditions such as the intake air temperature and engine coolant temperature to decide injection time. Fuel injection is done separately for each cylinder and is done once in two engine rotations.

System Configuration Diagram

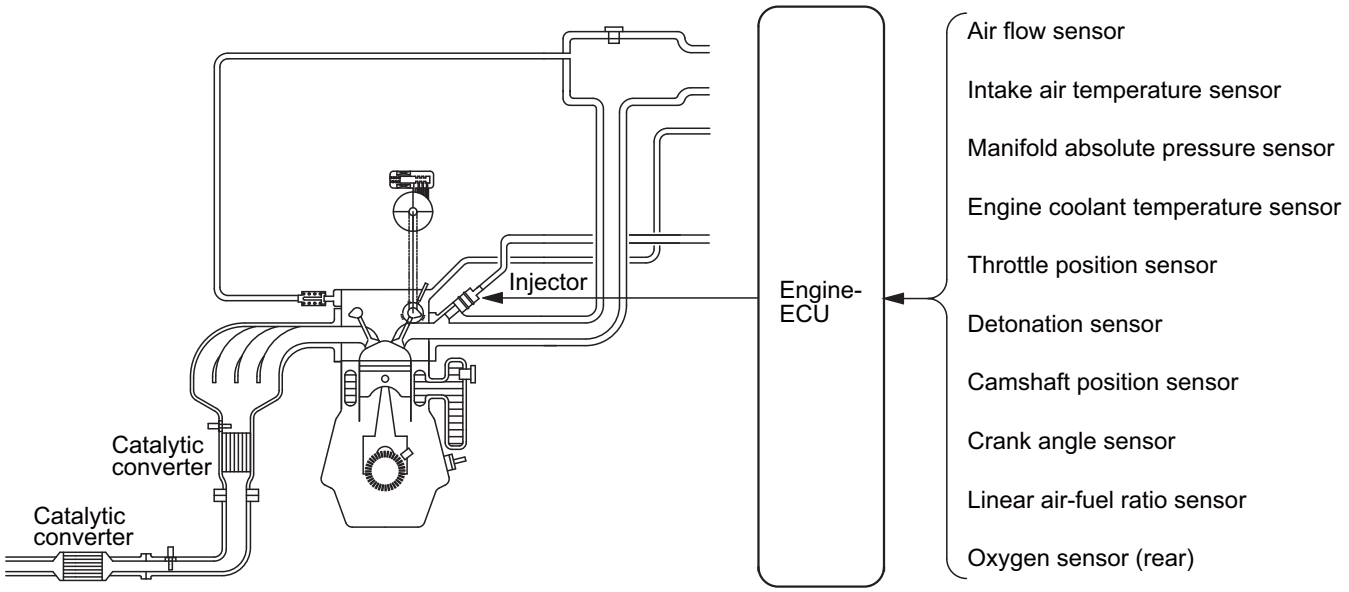

AKC00366AC

1. INJECTOR ACTUATION (FUEL INJECTION) TIMING

Injector drive time in case of multipoint fuel injection (MPI) is controlled as follows according to driving conditions.

Fuel Injection During Cranking and Normal Operation

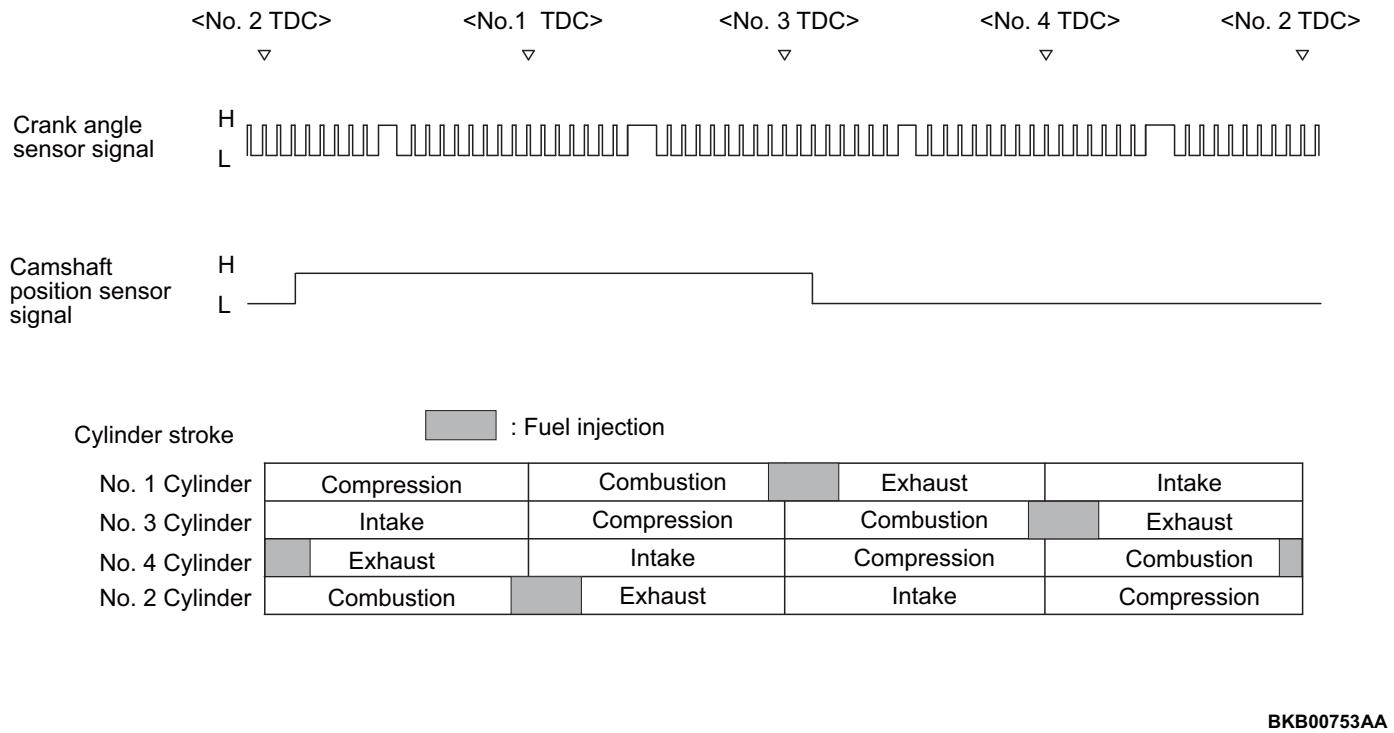

BKB00753AA

Fuel injection to each cylinder is done by driving the injector at optimum timing while it is in exhaust process based on the crankshaft position sensor signal. Engine-ECU compares the crankshaft position sensor output pulse signal and camshaft position sensor output pulse signal to identify the cylinder. Using this as a base, it performs sequential injection in the sequence of cylinders 1, 3, 4, 2.

Additional Fuel Injection During Acceleration

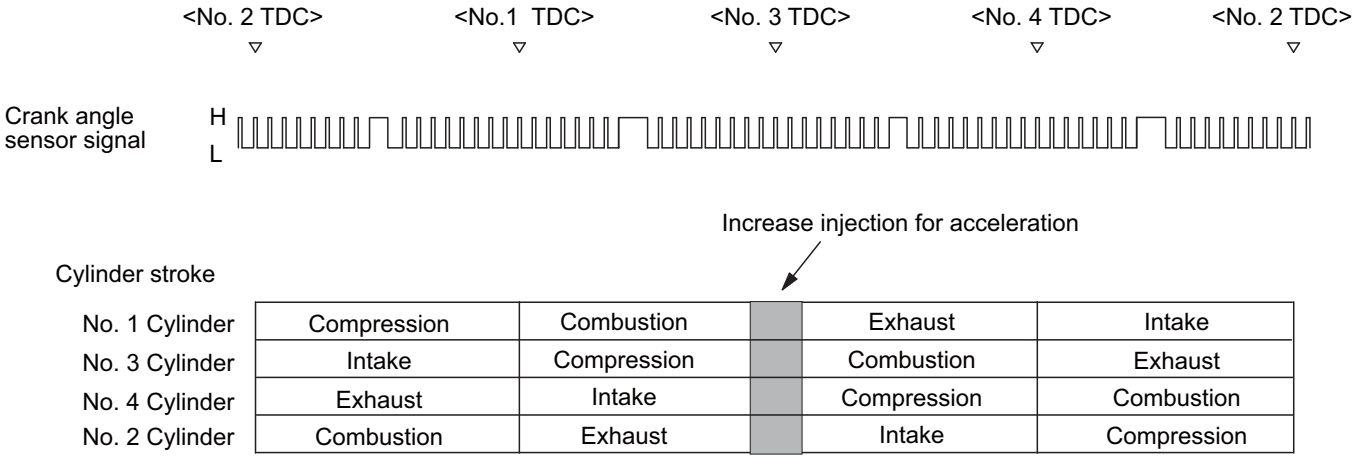

BK704439 AA

In addition to the synchronising fuel injection with crankshaft position sensor signal during acceleration, the volume of fuel is injected according to the extent of the acceleration.

2. Fuel injection volume (injector drive time) control

Under normal operating conditions, the figure shows the flow chart of calculating the injection amount during the injector driving time. Basic drive time is decided based on the air flow sensor signal (intake air volume signal) and crankshaft position sensor signal (engine rotation signal). This basic drive time is compensated according to signals from various sensors and optimum injector drive time (fuel injection volume) is calculated according to driving conditions.

Fuel Injection Volume Control Block Diagram (Normal Operation)

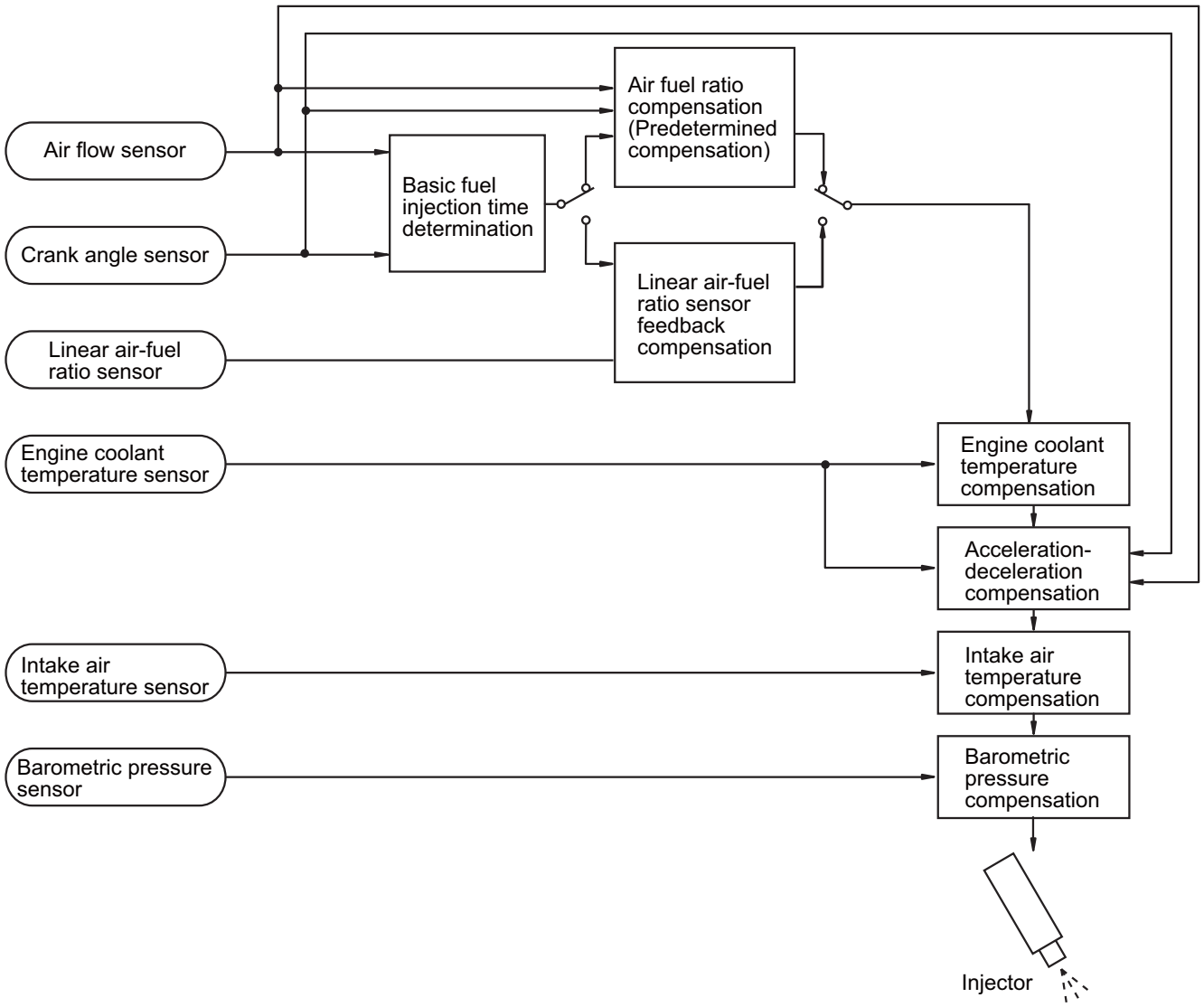

AKC00367AC

[Injector basic drive time]

Fuel injection is performed once per cycle for each cylinder. Basic drive time refers to fuel injection volume (injector drive time) to achieve theoretical air-fuel ratio for the intake air volume of 1 cycle of 1 cylinder. Fuel injection volume changes according to the pressure difference (injected fuel pressure) between manifold pressure and fuel pressure (constant). So, injected fuel pressure compensation is made to injector drive time for theoretical air-fuel ratio to arrive at basic drive time.

$$\text{Basic fuel injection time} \propto \frac{\text{Intake air amount per cycle per cylinder}}{\text{Theoretical air-fuel ratio}} \times \text{Fuel injection pressure compensation}$$

AK602279AB

Intake air volume of each cycle of 1 cylinder is calculated by engine-ECU based on the airflow sensor signal and crank angle sensor signal. Also, during engine start, the map value prescribed by the coolant temperature sensor signal is used as basic drive time.

[Injector drive time compensation]

After calculating the injector basic drive time, the engine-ECU makes the following compensations to control the optimum fuel injection volume according to driving conditions.

List of main compensations for fuel injection control

Compensations	Content
Linear air-fuel ratio sensor feedback compensation	The linear air-fuel ratio sensor signal is used for making the compensation to get air-fuel ratio with best cleaning efficiency of the 3-way catalytic converter. This compensation might not be made sometimes in order to improve drivability, depending on driving conditions. (Air-fuel ratio compensation is made.) The engine-ECU compensates the output signal of the oxygen sensor (front) using the output signal of the oxygen sensor (rear). This allows the deviation of the output signal, caused by the deterioration of the oxygen sensor (front), to be solved, then the highly accurate exhaust gas control is performed.
Air-fuel ratio compensation	Under driving conditions where oxygen sensor feedback compensation is not performed, compensation is made based on pre-set map values that vary according to engine speed and intake air volume.
Engine coolant temperature compensation	Compensation is made according to the engine coolant temperature. The lower the engine coolant temperature, the greater the fuel injection volume.
Acceleration/ Deceleration compensation	Compensation is made according to change in intake air volume. During acceleration, fuel injection volume is increased. Also, during deceleration, fuel injection volume is decreased.
Fuel injection compensation	Compensation is made according to the pressure difference between atmospheric pressure and manifold absolute pressure. The greater the difference in pressure, the shorter the injector drive time.
Battery voltage compensation	Compensation is made depending on battery voltage. The lower the battery voltage, the greater the injector drive signal time.
Learning value for fuel compensation	Compensation amount is learned to compensate feedback of linear air-fuel ratio sensor. This allows system to compensate in accordance with engine characteristics.

[Fuel-cut control when over-run]

When engine speed exceeds a prescribed limit (4,800 r/min), engine-ECU cuts fuel supply to prevent overrunning and thus protect the engine.

CATALYTIC CONVERTER

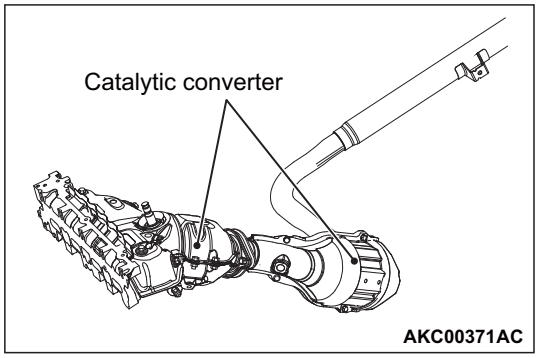

The exhaust manifold and the centre exhaust pipe include a catalytic converter.
Based on appropriate air-fuel ratio feedback from linear air-fuel ratio sensor and oxygen sensor (rear), CO and HC are oxidized and NOx is reduced. Catalytic converter is a monolith with beehive design with catalysts on the unit surface. It is protected by a thermally insulating mat and enclosed in a shell.

8.2.1.2. Gaseous emissions

M90802012A0018

IDLE MIXTURE CHECK

1. Before inspection, set the vehicle to the pre-inspection condition.

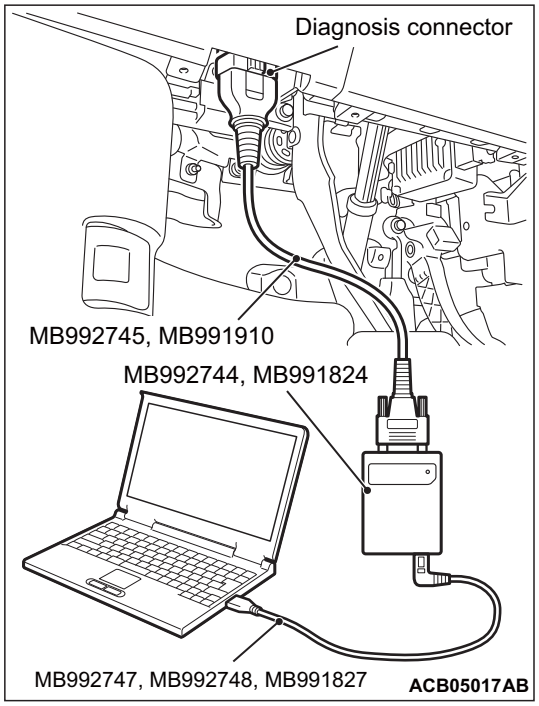

2. Turn OFF the power supply mode of the electric motor switch and then connect the M.U.T.-III to the diagnosis connector.

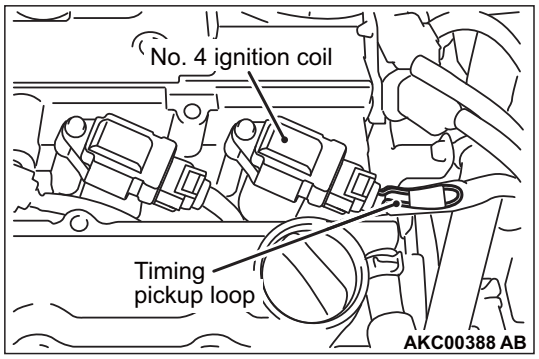

3. Set a timing light to the power supply line (terminal No. 3) of the ignition coil No. 4.

   NOTE: The power supply line is looped and also longer than the other ones.
4. Select BMU data list item No. 1 on the M.U.T.-III to measure Charge state (control). If the charge state (control) is less than 35 %, charge so that the charge state (control) can become 35 % or more.
5. Set the vehicle to the continuous idling mode.
6. Check that ignition timing is at the standard value.

   Standard value: approximately 28° BTDC

   NOTE:
   - The ignition timing may fluctuate within ± 7°. This is normal.
   - In higher altitude, the ignition timing is more advanced than the standard value by approximately 5°.
   - Wait till approximately 1 minute passes after the engine started, and check the ignition timing when the engine stabilized.
7. If there is a deviation from the standard value, inspect the MPI system.
8. Set the CO, HC tester.
9. Check again the charge state (control) of the Step 4. If the charge state (control) is 85 % or more, discharge so that the charge state (control) can become less than 85 %.
10. Press the battery charge switch. Run the engine for approximately 2 minutes.
11. Check the CO contents and the HC contents.

    Standard value
    CO contents: 0.3 % or less
    HC contents: 200 ppm or less
12. If there is a deviation from the standard value, inspect the MPI system.
13. Remove the HC, CO tester and timing light.

14.Turn OFF the power supply mode of the electric motor switch and then disconnect the M.U.T.-III.

MULTI USE TESTER (M.U.T.-III) SUB ASSEMBLY

MULTI USE TESTER (M.U.T.-III) sub assembly

Vehicle communication interface (V.C.I.)

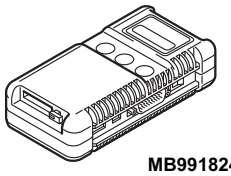

MB991824

M.U.T.-III USB cable

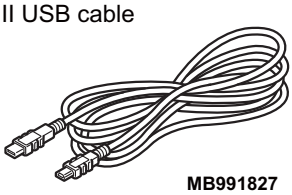

MB991827

M.U.T.-III main harness A

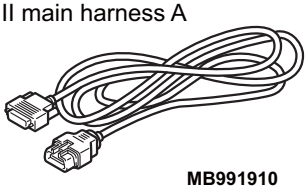

MB991910

M.U.T.-III main harness B

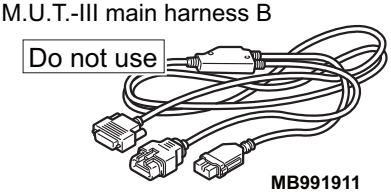

MB991911

M.U.T.-III adapter harness

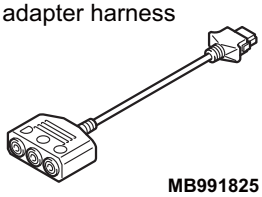

MB991825

M.U.T.-III trigger harness

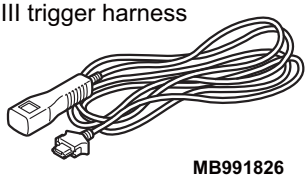

MB991826

AC305090AJ

MULTI USE TESTER (M.U.T.-III)

Vehicle communication interface-Lite (V.C.I.-Lite)



MB992744

V.C.I.-Lite main harness A

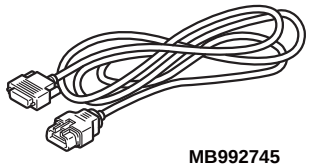

MB992745

V.C.I.-Lite main harness B

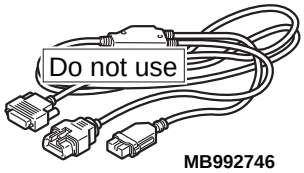

MB992746

V.C.I.-Lite USB cable short

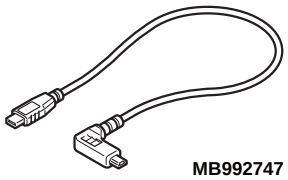

MB992747

V.C.I.-Lite USB cable long

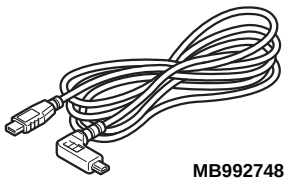

MB992748

ACB05419AB

- Both the special tool V.C.I. (MB991824) and the special tool V.C.I.-Lite (MB992744) can be used.

⚠ CAUTION

For the V.C.I., use MB991827 and MB991910. For the V.C.I.-Lite, use MB992745, MB992747 and MB992748.

- Refer to the "M.U.T.-III Owner's manual" for instructions on handling the M.U.T.-III.

⚠ CAUTION
Turn the ignition switch to the "LOCK" (OFF) position before connecting or disconnecting the M.U.T.-III.

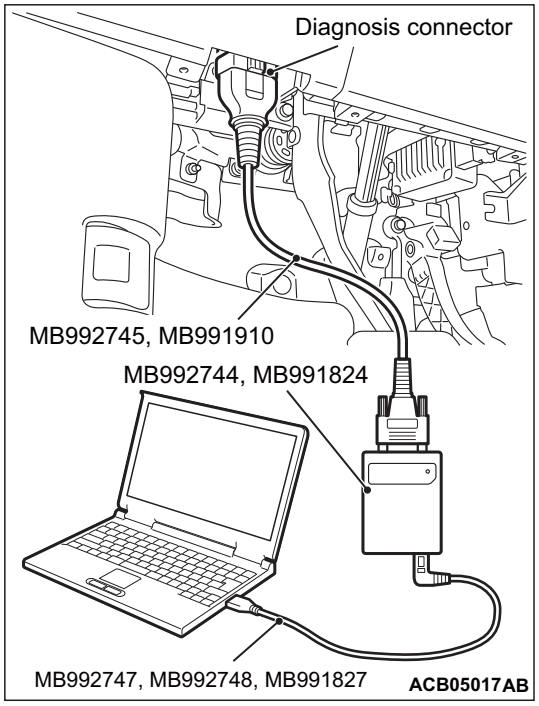

Connect the M.U.T.-III to the diagnosis connector as shown in the illustration.

8.2.2. Compression ignition engine emissions

8.2.2.1. Exhaust emission control equipment

M90802021A0013

SYSTEM CONFIGURATION DIAGRAM

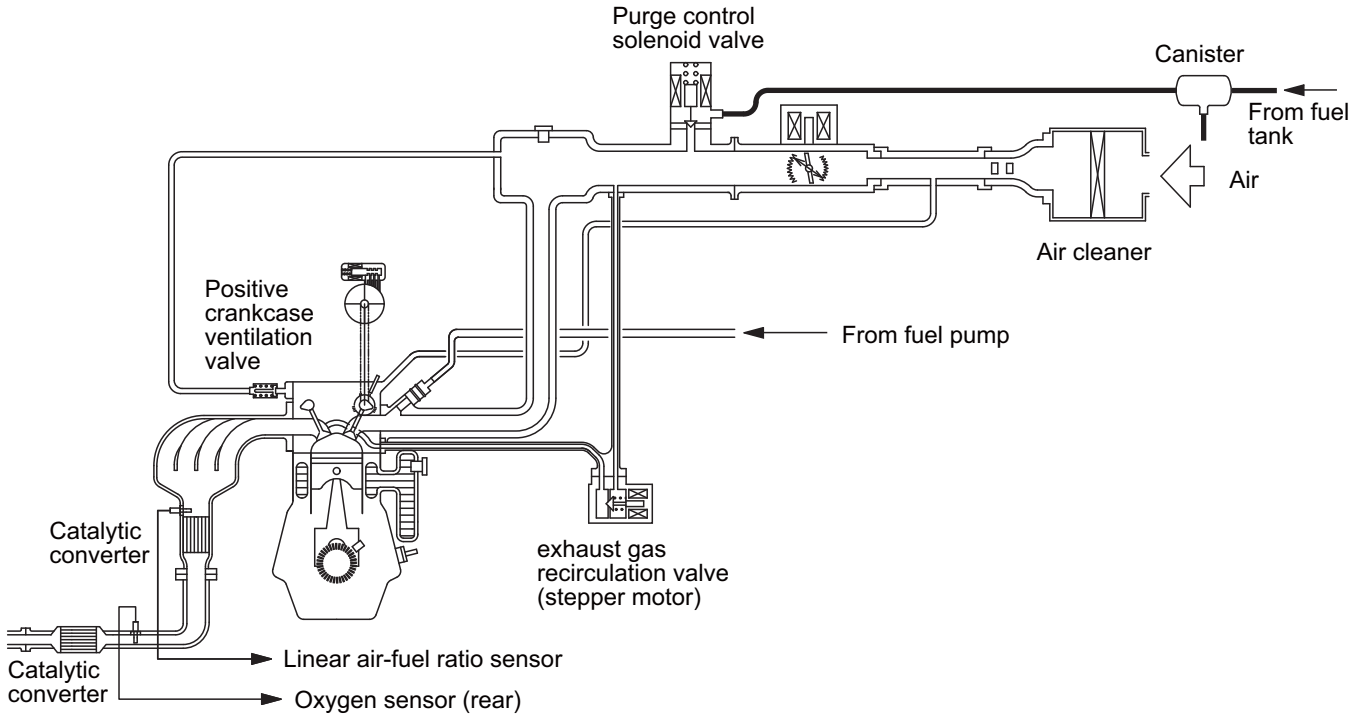

AKC00369AC

Exhaust gas cleaning devices list

System	Objective / Function	Composition parts
Crankcase ventilation system	HC decrease Re-combustion of blow-by gas.	Positive crankcase ventilation (PCV) valve
Evaporative emission control system	HC decrease Re-combustion of blow-by gas.	• Canister • Purge control solenoid valve

System		Objective / Function	Composition parts
Exhaust gas recirculation system		NOx decrease Reduce NOx generation by controlling EGR volume according to engine warm-up condition and driving conditions.	Exhaust gas recirculation valve
Emission reduction systems	Air-fuel ratio feedback control	Decrease of CO, HC and NOx Controls air-fuel ratio of air-fuel mixture to become theoretical air-fuel ratio (about 14.7), which is when the 3-way catalytic converter's cleaning performance is best. It also controls optimum fuel supply based on coolant temperature, driving conditions etc.	• Engine-ECU • Air flow sensor • Injector • Linear air-fuel ratio sensor • Oxygen sensor (rear) • Crank angle sensor etc.
	Catalytic converter	Decrease of CO, HC and NOx It facilitates oxidation of CO and HC and reduction of NOx so that all 3 component gases are cleaned simultaneously.	Monolith catalyst

COMPONENT LOCATION

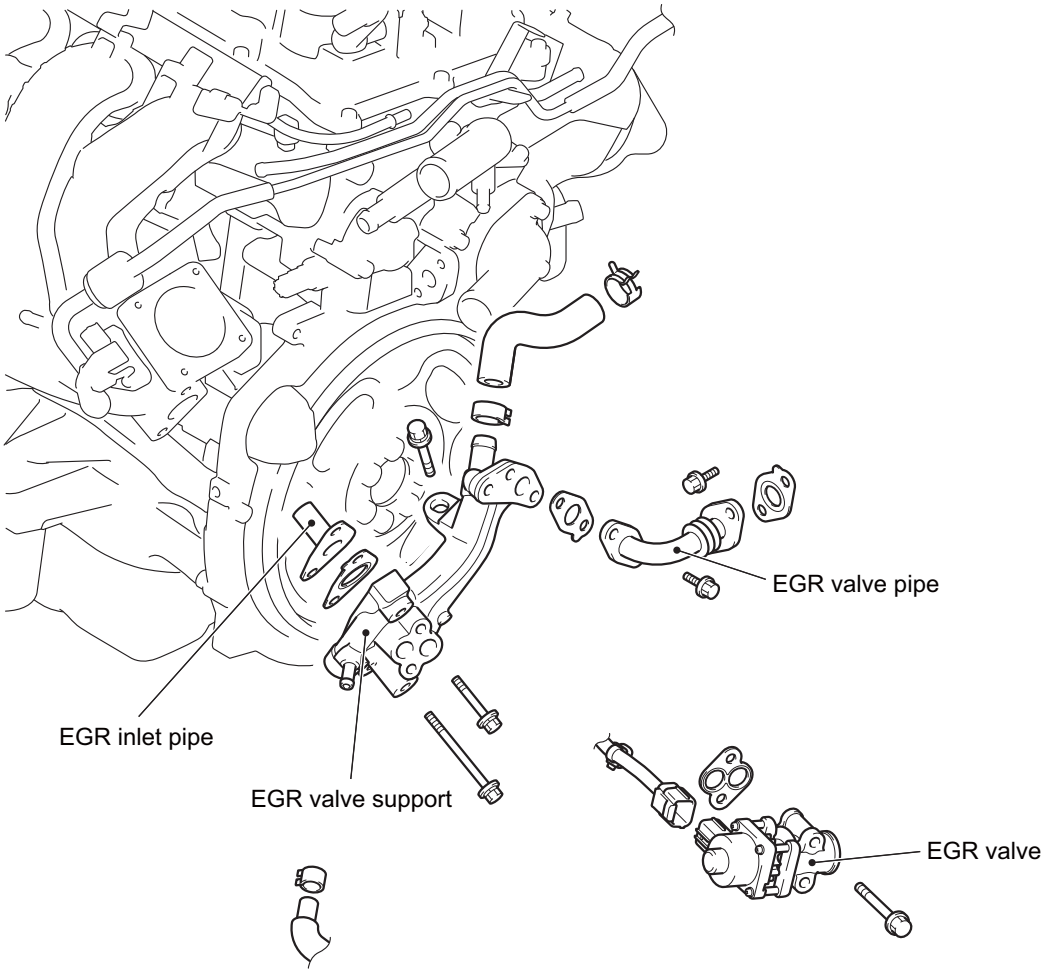

ACI01940

8.2.2.2. Opacity

M90802022A0013

PRE-INSPECTION CONDITION

"Pre-inspection condition" refers to the condition that the vehicle must be in before proper engine inspection can be carried out. If you see the words "Set the vehicle to the pre-inspection condition". In this manual, it means to set the vehicle to the following condition.

- Engine coolant temperature 80 to 90°C
- Lamps, electric cooling fan and all accessories: OFF

MULTI USE TESTER (M.U.T.-III) SUB ASSEMBLY

MULTI USE TESTER (M.U.T.-III) sub assembly

Vehicle communication interface (V.C.I.)

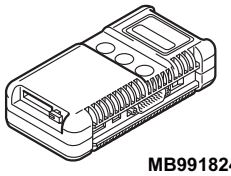

MB991824

M.U.T.-III USB cable

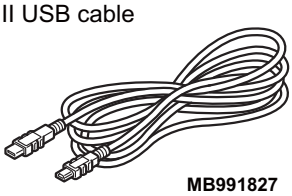

MB991827

M.U.T.-III main harness A

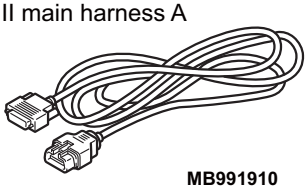

MB991910

M.U.T.-III main harness B

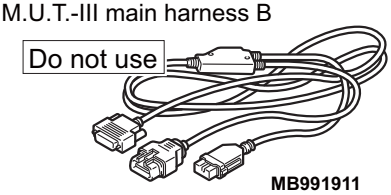

MB991911

M.U.T.-III adapter harness

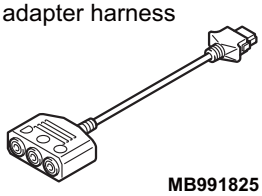

MB991825

M.U.T.-III trigger harness

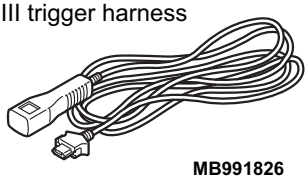

MB991826

AC305090AJ

MULTI USE TESTER (M.U.T.-III)

Vehicle communication interface-Lite (V.C.I.-Lite)



MB992744

V.C.I.-Lite main harness A

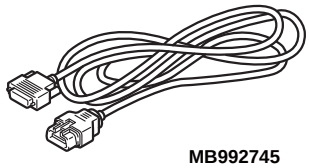

MB992745

V.C.I.-Lite main harness B

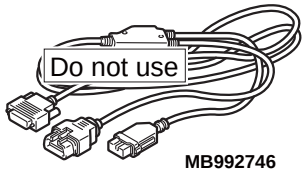

MB992746

V.C.I.-Lite USB cable short

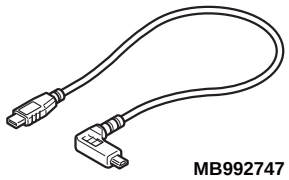

MB992747

V.C.I.-Lite USB cable long

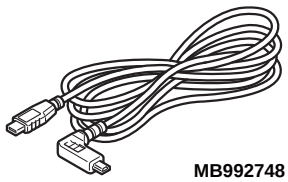

MB992748

ACB05419AB

- Both the special tool V.C.I. (MB991824) and the special tool V.C.I.-Lite (MB992744) can be used.

⚠ CAUTION

For the V.C.I., use MB991827 and MB991910. For the V.C.I.-Lite, use MB992745, MB992747 and MB992748.

- Refer to the "M.U.T.-III Owner's manual" for instructions on handling the M.U.T.-III.

⚠ CAUTION
Turn the ignition switch to the "LOCK" (OFF) position before connecting or disconnecting the M.U.T.-III.

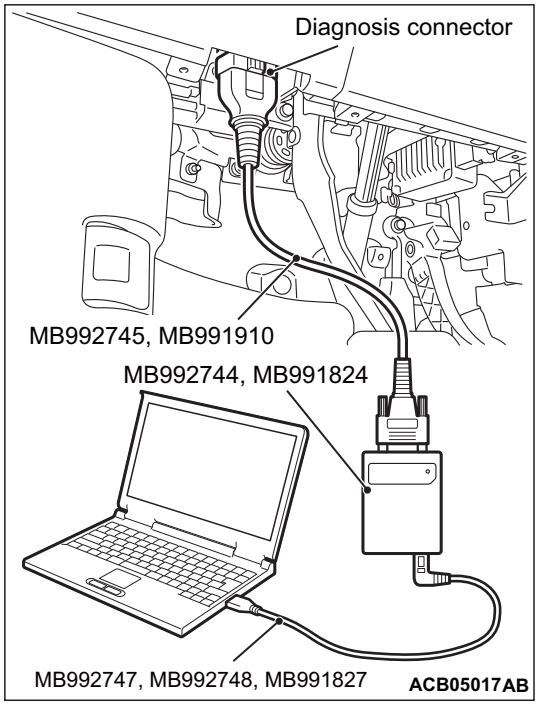

Connect the M.U.T.-III to the diagnosis connector as shown in the illustration.

8.3. ELECTROMAGNETIC INTERFERENCE SUPPRESSION

M90803000A0008

"Not Applicable"

8.4. OTHER ITEMS RELATED TO THE ENVIRONMENT

8.4.1. Fluid leaks

M90804010A0008

"Not Applicable"

GROUP 9

SUPPLEMENTARY TESTS FOR PASSENGER-CARRYING VEHICLES CATEGORIES M2, M3

CONTENTS

9.1. DOORS 9-3
9.1.1. Entrance and exit doors 9-3
9.1.2. Emergency exits 9-3

9.2. DEMISTING AND DEFROSTING SYSTEM (X)2 9-3

9.3. VENTILATION & HEATING SYSTEM (X)2 9-3

9.4. SEATS. 9-3
9.4.1. Passenger seats (including seats for accompanying personnel) 9-3
9.4.2. Driver's seat (additional requirements) 9-3

9.5. INTERIOR LIGHTING AND DESTINATION DEVICES (X)2. 9-3

9.6. GANGWAYS, STANDING AREAS 9-3

9.7. STAIRS AND STEPS. 9-3

9.8. PASSENGER COMMUNICATION SYSTEM (X)2 9-3

9.9. NOTICES (X)2 9-4

9.10. REQUIREMENTS REGARDING THE TRANSPORTATION OF CHILDREN. (X)2 9-4
9.10.1. Doors 9-4
9.10.2. Signalling and special equipment . . 9-4

9.11. REQUIREMENTS REGARDING THE TRANSPORTATION OF PERSONS WITH REDUCED MOBILITY (X)2. 9-4

9.11.1. Doors, ramps and lifts 9-4

9.11.2. Wheelchair restraint system 9-4

9.11.3. Signalling and special equipment . . 9-4

9.12. OTHER SPECIAL EQUIPMENT (X)2 9-4

9.12.1. Installations for food preparation . . . 9-4

9.12.2. Sanitary installation 9-4

9.12.3. Other devices (e.g. audio-visual systems) 9-4

9.1. DOORS

9.1.1. Entrance and exit doors

M90901010A0008

"Not Applicable"

9.1.2. Emergency exits

M90901020A0008

"Not Applicable"

9.2. DEMISTING AND DEFROSTING SYSTEM (X)2

M90902000A0008

"Not Applicable"

9.3. VENTILATION & HEATING SYSTEM (X)2

M90903000A0008

"Not Applicable"

9.4. SEATS

9.4.1. Passenger seats (including seats for accompanying personnel)

M90904010A0008

"Not Applicable"

9.4.2. Driver's seat (additional requirements)

M90904020A0008

"Not Applicable"

9.5. INTERIOR LIGHTING AND DESTINATION DEVICES (X)2

M90905000A0008

"Not Applicable"

9.6. GANGWAYS, STANDING AREAS

M90906000A0008

"Not Applicable"

9.7. STAIRS AND STEPS

M90907000A0009

"Not Applicable"

9.8. PASSENGER COMMUNICATION SYSTEM (X)2

M90908000A0008

"Not Applicable"

9.9. NOTICES (X)2

M90909000A0008

"Not Applicable"

9.10. REQUIREMENTS REGARDING THE TRANSPORTATION OF CHILDREN. (X)2

9.10.1. Doors

M90910010A0008

"Not Applicable"

9.10.2. Signalling and special equipment

M90910020A0008

"Not Applicable"

9.11. REQUIREMENTS REGARDING THE TRANSPORTATION OF PERSONS WITH REDUCED MOBILITY (X)2

9.11.1. Doors, ramps and lifts

M90911010A0008

"Not Applicable"

9.11.2. Wheelchair restraint system

M90911020A0008

"Not Applicable"

9.11.3. Signalling and special equipment

M90911030A0008

"Not Applicable"

9.12. OTHER SPECIAL EQUIPMENT (X)2

9.12.1. Installations for food preparation

M90912010A0008

"Not Applicable"

9.12.2. Sanitary installation

M90912020A0008

"Not Applicable"

9.12.3. Other devices (e.g. audio-visual systems)

M90912030A0008

"Not Applicable"