| | |
|---|---|
| **Newsletter** | **ENL-19-016-SR Revision_IO** |
| **Model** | **L200 / Triton (KK0T, KL0T)** |
| **Group** | **51** |
| **Subject** | **Side Step Shade drop-off due to rivet fracture** |
| **Date** | **~~13-06-2019,~~ 13-08-2019** |
| | **(REF. MMC: SSI 1904009)** |
| **Revision** | **Inspection code added** |

**RECALL CAMPAIGN**

Campaigns are issued by MME to ensure the systematic rectification of design, construction or manufacturing defects. It is the Distributor's responsibility to implement and follow an adequate procedure to ensure that any Recall and Service Campaign information is made available to the Dealers without delay, and that Dealers will carry out the campaign as instructed.

Normal newsletters only require action on customer complaint basis.
A revised newsletter supersedes the previous release as from the revised date.

For additional information and responsibilities please refer to the After Sales Policies & Warranty Procedures Manual.

Contact:
Mitsubishi-motors-europe.com

© Copyright Mitsubishi Motors Europe B.V. 2019

ENL-19-016-SR_IO
Issue date: 13 June 2019

## 1. CONDITION:

The rivets fixing the side step shades may corrode and fracture. In case all the rivets fracture, the side step shades may drop off from the vehicle causing a risk of a vehicle accident.

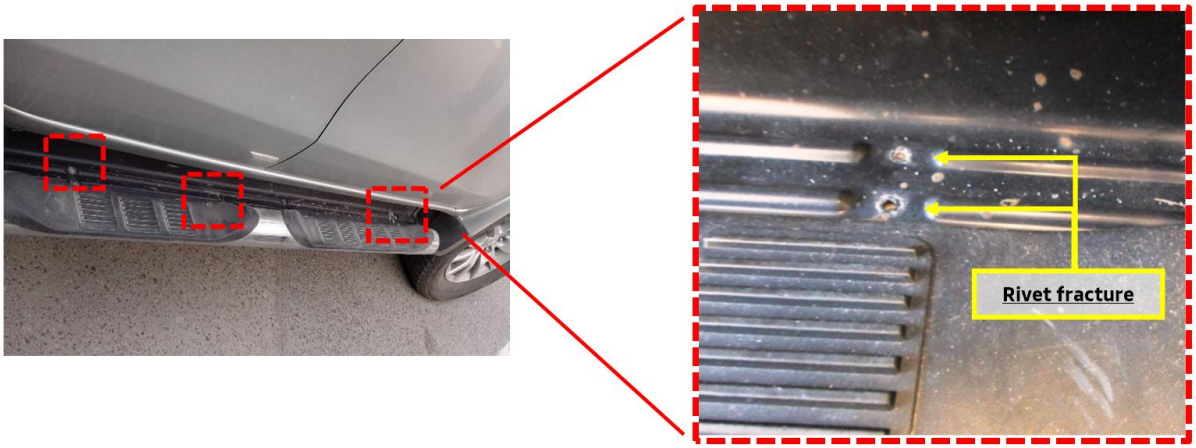


## 2. CAUSE:

The rivets corrode and fracture especially under the environmental usage condition where these are exposed to salt or anti-freeze agent.

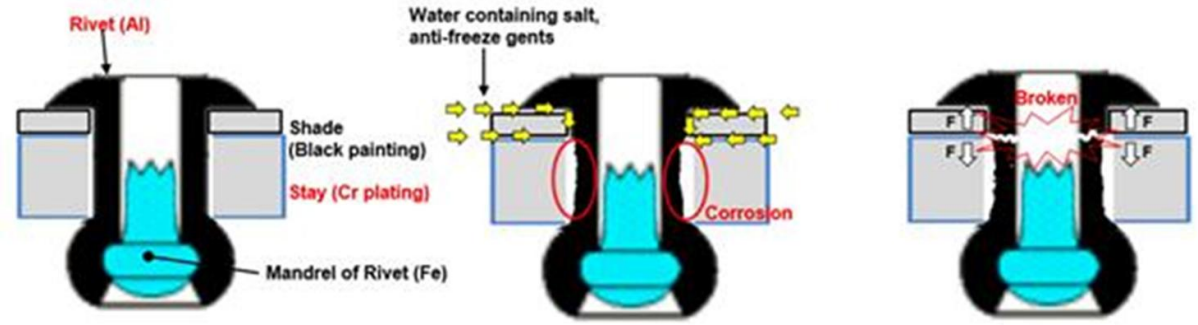


## 3. AFFECTED MODEL RANGE:

| | | |
|---|---|---|
| Models | : | L200 / Triton (KK0T, KL0T) |
| VIN / Chassis number | : | 16MY* |
| Markets concerned | : | All markets |

*Your vehicle might not be included, please confirm with an authorized Mitsubishi dealer.

## 4. PRODUCTION FIX:

The side steps have been changed to another type since 17MY production.

## 5. FIELD FIX:

**Check procedure**

Inspect whether the original pipe type side steps are installed before continuing to the repair procedure.

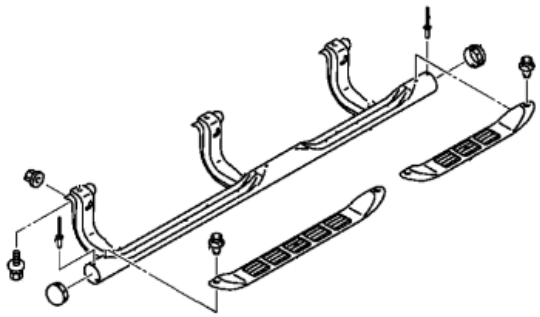

Original pipe type

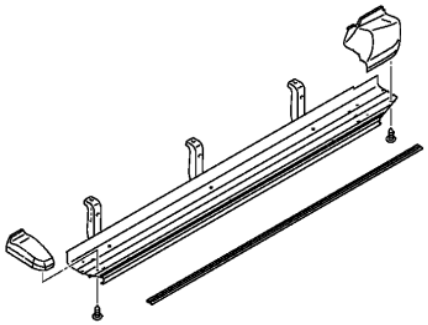

Plate type since 17MY

**Repair procedure**

Remove all the rivets and fix the side step shades with new bolts and nuts instead.
Refer to the attached repair procedure.

Repair procedure SSI 1904009.docx

**Required parts**

| Vehicle | Part number | Part name | Quantity | Remarks |
|---|---|---|---|---|
| L200 / Triton (KK0T, KL0T) | MW400255TH | Bolt, flange (8.0 x 16) | 1 | 1 set contains 12 bolts |
| | MW400256TH | Nut, flange (8) | 1 | 1 set contains 12 nuts |

## 6. WARRANTY REIMBURSEMENT:

Please visit our authorized Mitsubishi workshop. The repair will be carried out by the authorized Mitsubishi workshop free of charge for the customer.

| Operation | Vehicle model | Order number | Operation time | Remarks |
|---|---|---|---|---|
| Inspection and reinstall side steps | L200 (KK0T, KL0T) | R30382 10 | 1.2H | - |
| Inspection only | | R30382 30 | 0.2H | - |

## 7. PART SUPPLY:

The parts will be supplied via the Mitsubishi dealer network.